OPERATION MANUAL

MQ WHITEMAN

MODEL J36B65
WALK-BEHIND TROWEL

(VANGUARD 6.5 HP GASOLINE ENGINE)

Revision #2 (01/28/25)

To find the latest revision of this publication or associated parts manual, visit our website at:
www.multiquip.com



THIS MANUAL MUST ACCOMPANY THE EQUIPMENT AT ALL TIMES.

PN: 48237


WARNING
CANCER &
REPRODUCTIVE HARM
www.P65Warnings.ca.gov
P/N 38707

⚠ WARNING



SILICOSIS WARNING

Grinding/cutting/drilling of masonry, concrete, metal and other materials with silica in their composition may give off dust or mists containing crystalline silica. Silica is a basic component of sand, quartz, brick clay, granite and numerous other minerals and rocks. Repeated and/or substantial inhalation of airborne crystalline silica can cause serious or fatal respiratory diseases, including silicosis. In addition, California and some other authorities have listed respirable crystalline silica as a substance known to cause cancer. When cutting such materials, always follow the respiratory precautions mentioned above.

⚠ WARNING



RESPIRATORY HAZARDS

Grinding/cutting/drilling of masonry, concrete, metal and other materials can generate dust, mists and fumes containing chemicals known to cause serious or fatal injury or illness, such as respiratory disease, cancer, birth defects or other reproductive harm. If you are unfamiliar with the risks associated with the particular process and/or material being cut or the composition of the tool being used, review the material safety data sheet and/or consult your employer, the material manufacturer/supplier, governmental agencies such as OSHA and NIOSH and other sources on hazardous materials. California and some other authorities, for instance, have published lists of substances known to cause cancer, reproductive toxicity, or other harmful effects.

Control dust, mist and fumes at the source where possible. In this regard use good work practices and follow the recommendations of the manufacturers or suppliers, OSHA/NIOSH, and occupational and trade associations. Water should be used for dust suppression when wet cutting is feasible. When the hazards from inhalation of dust, mists and fumes cannot be eliminated, the operator and any bystanders should always wear a respirator approved by NIOSH/MSHA for the materials being used.

J36B65 Walk-Behind Trowel

Proposition 65 Warning 2
Silicosis/Respiratory Warnings 3
Table of Contents..... 4
Training Checklist 5
Daily Pre-Operation Checklist 6
Safety Information 7–11
Lifting and Transporting 12
Specifications (Trowel) 13
Dimensions..... 14
General Information..... 15
Components (Trowel) 16–17
Components (Engine)..... 18
Setup 19–26
Inspection 27–29
Operation..... 30–34
Options 35–36
Maintenance 37–45
Troubleshooting (Engine) 46–47
Troubleshooting (Trowel)..... 48–49
Wiring Diagram..... 50

Training Checklist			
No.	**Description**	**OK?**	**Date**
1	Read operation manual completely.		
2	Machine layout, location of components, checking of engine oil level.		
3	Fuel system, refueling procedure.		
4	Operation of controls (machine not running).		
5	Safety controls, safety stop switch operation.		
6	Emergency stop procedures.		
7	Startup of machine, engine choke.		
8	Maintaining a hover.		
9	Maneuvering.		
10	Pitching.		
11	Concrete finishing techniques.		
12	Shutdown of machine.		
13	Lifting of machine (lifting bail).		
14	Machine transport and storage.		

DAILY PRE-OPERATION CHECKLIST

Daily Pre-Operation Checklist		✓	✓	✓	✓	✓	✓
1	Engine oil level						
2	Gearbox oil level						
3	Condition of blades						
4	Blade pitch operation						
5	Safety stop switch operation						

Do not operate or service the equipment before reading the entire manual. Safety precautions should be followed at all times when operating this equipment. Failure to read and understand the safety messages and operating instructions could result in injury to yourself and others.



SAFETY MESSAGES

The four safety messages shown below will inform you about potential hazards that could injure you or others. The safety messages specifically address the level of exposure to the operator and are preceded by one of four words: **DANGER, WARNING, CAUTION** or **NOTICE.**

SAFETY SYMBOLS

DANGER

Indicates a hazardous situation which, if not avoided, **WILL** result in **DEATH** or **SERIOUS INJURY.**

WARNING

Indicates a hazardous situation which, if not avoided, **COULD** result in **DEATH** or **SERIOUS INJURY.**

CAUTION

Indicates a hazardous situation which, if not avoided, **COULD** result in **MINOR** or **MODERATE INJURY.**

NOTICE

Addresses practices not related to personal injury.

Potential hazard associated with the operation of this equipment will be referenced with ***hazard symbols*** which may appear throughout this manual in conjunction with safety messages.

SYMBOL	SAFETY HAZARD
	**WARNING** Lethal Exhaust Gas Hazard • Inhaling exhaust fumes can result in severe injury or death. • Only operate equipment in well ventilated areas. • **DO NOT** inhale exhaust gases/fumes.
	**WARNING** Explosive Fuel Hazard • Gasoline fuel can cause fire or explosion. Stop engine before refueling. • Keep cigarettes, sparks and flames away from hot surfaces.
	**CAUTION** Burn Hazard • **HOT PARTS** can burn skin. • **DO NOT** touch hot parts. Allow machine a sufficient amount of time to cool before performing maintenance.

Warning decals associated with the operation of this equipment are defined below:

DECAL	SAFETY HAZARD
	**WARNING** Rotating Blade Hazard • Keep hands and feet clear of guard rings. • Stop engine before servicing.
	**WARNING** Read Manual To avoid injury you must read and understand operator's manual before using this machine.
	**WARNING** Lifting Crush Hazard • **NEVER** allow any person to stand underneath the trowel while lifting. • **DO NOT** lift trowel with pans attached. • **ALWAYS** make sure handle is securely attached. • On Quick Pitch™ models make sure T-Handle latch is locked (engaged).
	**ALWAYS** wear protective clothing when operating this equipment
	**WARNING** Training This machine to be operated by qualified personnel. Ask for training as needed.
	**WARNING** Guard Hazard **NEVER** operate this equipment with guards removed. Keep hands clear.

GENERAL SAFETY

⚠ CAUTION

- **NEVER** operate this equipment without proper protective clothing, shatterproof glasses, respiratory protection, hearing protection, steel-toed boots and other protective devices required by the job or city and state regulations.



- Avoid wearing jewelry or loose fitting clothes that may snag on the controls or moving parts as this can cause serious injury.
- **NEVER** operate this equipment when not feeling well due to fatigue, illness or when under medication.



- **NEVER** operate this equipment under the influence of drugs or alcohol.



- **ALWAYS** clear the work area of any debris, tools, etc. that would constitute a hazard while the equipment is in operation.
- No one other than the operator is to be in the working area when the equipment is in operation.
- **DO NOT** use the equipment for any purpose other than its intended purposes or applications.

NOTICE

- This equipment should only be operated by trained and qualified personnel 18 years of age and older.
- Whenever necessary, replace nameplate, operation and safety decals when they become difficult read.
- Manufacturer does not assume responsibility for any accident due to equipment modifications. Unauthorized equipment modification will void all warranties.
- **NEVER** use accessories or attachments that are not recommended by Multiquip for this equipment. Damage to the equipment and/or injury to user may result.
- **ALWAYS** know the location of the nearest **fire extinguisher.**



- **ALWAYS** know the location of the nearest **first aid kit.**



- **ALWAYS** know the location of the nearest phone or **keep a phone on the job site.** Also, know the phone numbers of the nearest **ambulance, doctor** and **fire department.** This information will be invaluable in the case of an emergency.

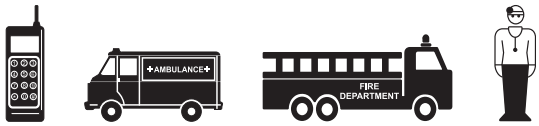

TROWEL SAFETY

⚠ DANGER

- Engine fuel exhaust gases contain poisonous carbon monoxide. This gas is colorless and odorless, and can cause death if inhaled.
- The engine of this equipment requires an adequate free flow of cooling air. **NEVER** operate this equipment in any enclosed or narrow area where free flow of the air is restricted. If the air flow is restricted it will cause injury to people and property and serious damage to the equipment or engine.

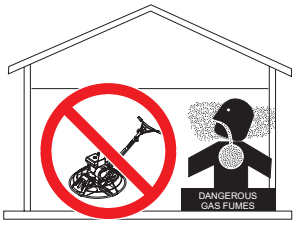

- **NEVER** operate the equipment in an explosive atmosphere or near combustible materials. An explosion or fire could result causing severe **bodily harm or even death.**



⚠ WARNING

- **ALWAYS** keep clear of rotating or moving parts while operating the trowel.



- **DO NOT** start or operate the trowel if the drive train will not disengage. Centrifugal force between the trowel and surface when starting can cause uncontrolled handle movement that can cause serious injury. The handle must not move while pulling the engine recoil starter.
- **NEVER** disconnect any **emergency or safety devices.** These devices are intended for operator safety. Disconnection of these devices can cause severe injury, bodily harm or even death. Disconnection of any of these devices will void all warranties.

⚠ CAUTION

- **NEVER** stand on trowel during operation.
- **NEVER** lubricate components or attempt service on a running machine.
- **NEVER** place your feet or hands inside the guard rings while starting or operating this equipment.
- **ALWAYS** keep work area clear around the trowel. Make sure it is free of debris and objects.

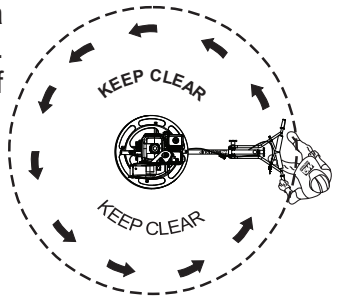

NOTICE

- **ALWAYS** keep the machine in proper running condition.
- Fix damage to machine and replace any broken parts immediately.
- **ALWAYS** store equipment properly when it is not being used. Equipment should be stored in a clean, dry location out of the reach of children and unauthorized personnel.
- A safety manual for operating and maintenance personnel of concrete power trowels produced by the Association of Equipment Manufacturers (AEM) can be obtained for a fee by ordering through their website at www.aem.org.

  Order FORM PT-160

ENGINE SAFETY

⚠ WARNING

- **DO NOT** place hands or fingers inside engine compartment when engine is running.
- **NEVER** operate the engine with heat shields or guards removed.
- Keep fingers, hands hair and clothing away from all moving parts to prevent injury.



- **DO NOT** remove the engine oil drain plug while the engine is hot. Allow the oil to cool before performing maintenance. This will prevent scalding of personnel.

⚠ CAUTION

- **NEVER** touch the hot exhaust manifold, muffler or cylinder. Allow these parts to cool before servicing equipment.



NOTICE

- **NEVER** run engine without an air filter or with a dirty air filter. Severe engine damage may occur. Service air filter frequently to prevent engine malfunction.
- **NEVER** tamper with the factory settings of the engine or engine governor. Damage to the engine or equipment can result if operating in speed ranges above the maximum allowable.



FUEL SAFETY

⚠ DANGER

- **DO NOT** add fuel to equipment if it is placed inside truck bed with plastic liner. Possibility exists of explosion or fire due to static electricity.

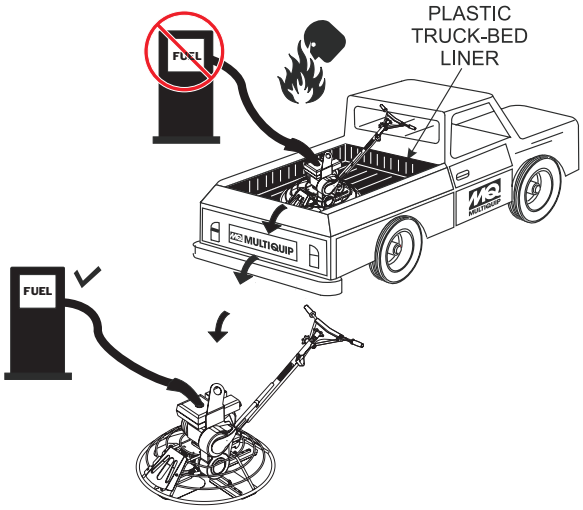

- **DO NOT** start the engine near spilled fuel or combustible fluids. Fuel is extremely flammable and its vapors can cause an explosion if ignited.
- **ALWAYS** refuel in a well-ventilated area, away from sparks and open flames.
- **ALWAYS** use extreme caution when working with **flammable** liquids.
- **DO NOT** fill the fuel tank while the engine is running or hot.
- **DO NOT** overfill tank, since spilled fuel could ignite if it comes into contact with hot engine parts or sparks from the ignition system.
- Store fuel in appropriate containers, in well-ventilated areas and away from sparks and flames.
- **NEVER** use fuel as a cleaning agent.
- **DO NOT** smoke around or near the equipment. Fire or explosion could result from fuel vapors or if fuel is spilled on a hot engine.



TRANSPORTING SAFETY

⚠ CAUTION

- **NEVER** allow any person or animal to stand underneath the equipment while lifting.



NOTICE

- Some walk-behind trowels can be lifted or moved by two people utilizing lifting tubes or other special attachments. Generally, however, they must be lifted using lifting bales and cranes, hoists, or forklifts.
- **NEVER** transport trowel with float pans attached unless safety catches are used and are specifically cleared for such transport by the manufacturer.
- **NEVER** hoist the trowel more than three feet off the ground with float pans attached.
- Before lifting, make sure that the lifting bales are not damaged.
- Always make sure crane or lifting device has been properly secured to the lifting bales of the equipment.
- **ALWAYS** shutdown engine before transporting.
- **NEVER** lift the equipment while the engine is running.
- Tighten fuel tank cap securely and close fuel cock to prevent fuel from spilling.
- Use adequate lifting cable (wire or rope) of sufficient strength.
- **DO NOT** lift machine to unnecessary heights.
- **ALWAYS** tie down equipment during transport by securing the equipment with rope.

ENVIRONMENTAL SAFETY/DECOMMISSIONING

NOTICE

Decommissioning is a controlled process used to safely retire a piece of equipment that is no longer serviceable. If the equipment poses an unacceptable and unrepairable safety risk due to wear or damage or is no longer cost effective to maintain (beyond life-cycle reliability) and is to be decommissioned (demolition and dismantlement),be sure to follow rules below.

- **DO NOT** pour waste or oil directly onto the ground, down a drain or into any water source.
- Contact your country's Department of Public Works or recycling agency in your area and arrange for proper disposal of any electrical components, waste or oil associated with this equipment.



- When the life cycle of this equipment is over, remove battery and bring to appropriate facility for lead reclamation. Use safety precautions when handling batteries that contain sulfuric acid.
- When the life cycle of this equipment is over, it is recommended that the trowel frame and all other metal parts be sent to a recycling center.

  Metal recycling involves the collection of metal from discarded products and its transformation into raw materials to use in manufacturing a new product.

  Recyclers and manufacturers alike promote the process of recycling metal. Using a metal recycling center promotes energy cost savings.

EMISSIONS INFORMATION

NOTICE

The gasoline engine used in this equipment has been designed to reduce harmful levels of carbon monoxide (CO), hydrocarbons (HC) and nitrogen oxides (NOx) contained in gasoline exhaust emissions.

This engine has been certified to meet US EPA Evaporative emissions requirements in the installed configuration.

Attempting to modify or make adjustments to the engine emmission system by unauthorized personnel without proper training could damage the equipment or create an unsafe condition.

Additionally, modifying the fuel system may adversely affect evaporative emissions, resulting in fines or other penalties.

Emission Control Label

The emission control label is an integral part of the emission system and is strictly controlled by regulation(s).

The label must remain with the engine for its entire life.

If a replacement emission label is needed, please contact your authorized engine distributor.

LIFTING THE TROWEL

WARNING

Extra care should be taken when lifting the trowel. **Serious personal injury** or damage to the equipment can be caused by a dropped trowel.

WARNING

NEVER attempt to lift this machine alone. **NEVER** lift the trowel by the guard ring, as the trowel may rotate and cause injury.

ALWAYS make sure the handle is secure, and use only the manufacturer's approved lifting point. The trowel may be lifted by the center lifting bail using a crane or other device with adequate lifting capacity.

CAUTION

NEVER lift the trowel to unnecessary heights. **NEVER** stand underneath the trowel while it is being lifted.

Lifting Bail

The lifting bail provides an optimal lift point for the trowel. When lifting the trowel onto a concrete slab, attach a chain or rope to the lifting bail. Make sure the capacity of the lifting device is adequate for the weight of the trowel.

Using a crane or forklift to lift the trowel (Figure 1) is **highly recommended**, and is perfectly safe for the trowel. **ALWAYS** use extra care when lifting the trowel off the ground.

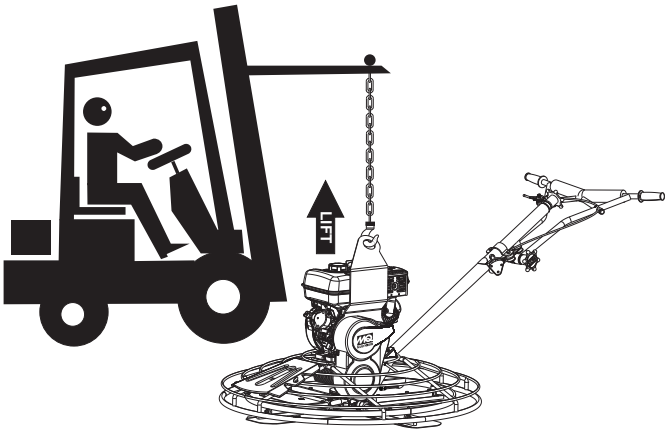

Figure 1. Lifting The Trowel

Table 1. J36B65 Trowel Specifications	
Number of Blades	4
Clutch Type	Centrifugal
Ring Diameter	36 in. (914 mm)
Rotor Speed	60–115 rpm
Operating Weight	184 lb. (83.4 kg)
Shipping Weight	182 lb. (82.5 kg)

Table 2. Vanguard Engine Specifications	
Model	Vanguard 12V300
Type	Single-cylinder, gasoline engine
Bore × Stroke	2.68 in. × 2.2 in. (68 mm × 56 mm)
Displacement	203 cm³
Gross Power Output	6.5 hp (4.8 kW) @ 3,600 rpm
Compression Ratio	8.4:1
Ignition System	Capacitor discharge
Lubrication System	Splash
Lube Oil Capacity	20 oz. (0.59 liters)
Lube Oil Type	High-quality detergent oil classified for service SF, SG, SH, SJ or higher
Air Cleaner	Integrated cyclonic
Fuel Tank Capacity	3.2 quarts (3.1 liters)
Fuel	87 octane or higher unleaded gasoline
Dimensions (L × W × H)	11.39 × 14.78 × 14.22 in. (289 × 375 × 361 mm)
Dry Net Weight	39.5 lb. (17.9 kg)

Table 3. J36B65 Noise and Vibration Emissions	
Guaranteed ISO 11201:2010 Based Sound Pressure Level at Operator Station in dB(A)[a]	TBA
Guaranteed ISO 3744:2010 Based Sound Power Level in dB(A)[b]	TBA
Hand-Arm Vibration per ISO 5349-1:2001 in m/s² ∑(A8)	1.8111

NOTES:

1. Sound pressure and power levels are “A” weighted measures per ISO 3744:2010. They are measured under operating conditions of the machine which generate the most repeatable but highest values of the sound levels. Under normal circumstances, the sound level will vary depending on the condition of the material being worked upon.
2. The vibration level indicated is the vector sum of the RMS (root mean square) values of amplitudes on each axis, standardized to an 8-hour exposure period, and obtained using the operating condition of the machine that generates the most repeatable but highest values in accordance with the applicable standards for the machine.
3. Per EU Directive 2002/44/EC, the daily exposure action value for hand/arm vibration is 2.5 m/s^2 ∑A(8). The daily exposure limit value is 5 m/s^2 ∑A(8).

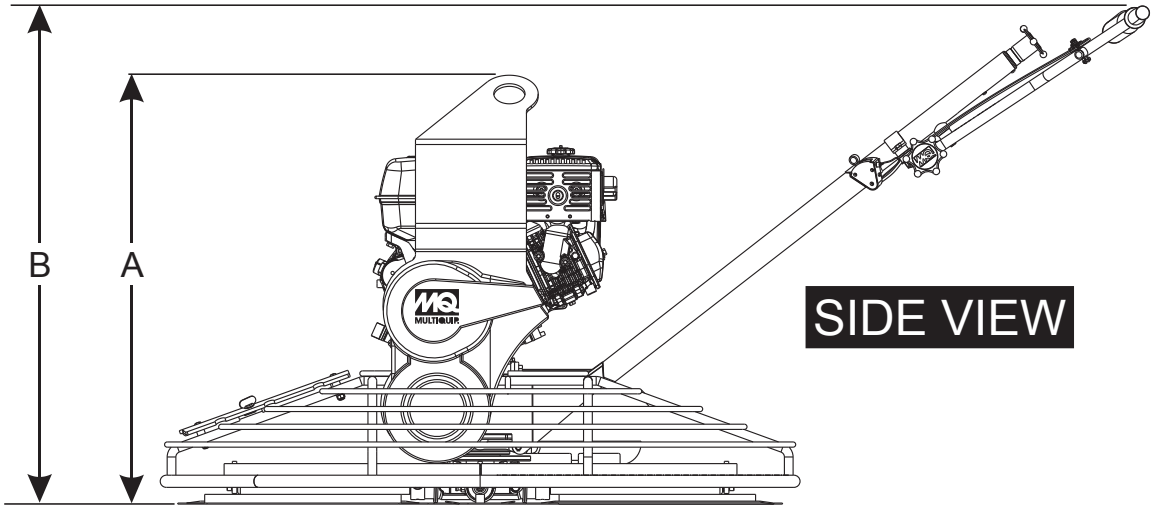

Standard Handle Shown

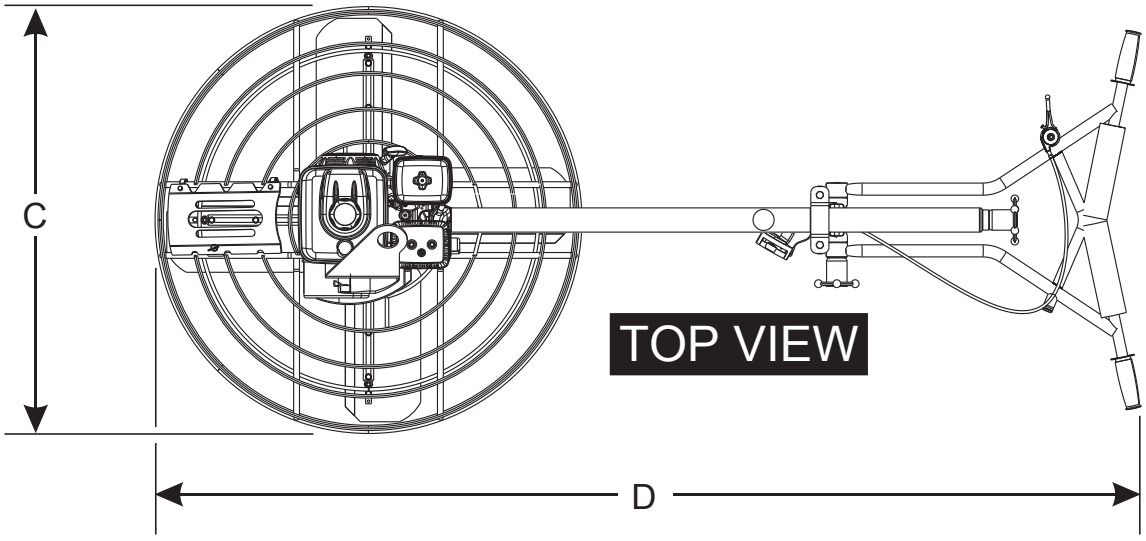

Figure 2. J36B65 Trowel Dimensions

Table 4. J36B65 Trowel Dimensions	
(A) Height (Lifting Bail)	27 in. (686 mm)
(B) Height (Handle)	41 in. (1,044 mm)
(C) Width (Ring Diameter)	36 in. (914 mm)
(D) Length	70 in. (1,789 mm)

INTENDED USE

Operate this trowel, its components and tools in accordance with the manufacturer's instructions. Use of any other tools for stated operation is considered contrary to designated use. The risk of such use lies entirely with the user. The manufacturer cannot be held liable for damages as a result of misuse.

TROWEL FAMILIARIZATION

Read all safety instructions carefully. Safety instructions will be found throughout this manual and on the trowel. Keep all safety information in good, readable condition. Operators should be well trained on the operation and maintenance of the trowel.

This walk-behind trowel is designed for the floating and finishing of concrete slabs.

Walk around the trowel and take notice of all the major components (Figure 3) — the engine, blades, steering handle, gearbox, etc. Make sure there is always oil in the engine.

Before using your trowel, test it on a flat, watered-down section of finished concrete that is free of debris and other objects.

This trial test run will increase your confidence in using the trowel and will familiarize you with the trowel's controls. You will learn how the trowel handles under actual conditions.

Engine

This trowel is equipped with a Vanguard 6.5-horsepower, single-cylinder, gasoline engine. Refer to the engine owner's manual for instructions regarding the operation and maintenance of your engine. If the original manual is lost or damaged, please contact your nearest Multiquip dealer for a replacement.

Drive System

Power is transferred from the engine to the gearbox input shaft via a V-belt pulley drive system. The pulley engages a centrifugal clutch.

Gearbox

The gearbox is located beneath the engine and transfers power to the spider assembly. The gearbox controls the rotational speed of the trowel and is equipped with two shafts (input and output).

Spider

The vertical output shaft of the gearbox connects to a cast hub called the spider. The spider has four arms that extend outward, to which blades or other accessories are attached. As the gearbox output shaft rotates, so does the spider assembly.

Blades

The blades of the trowel finish concrete as they are rotated around the surface. This trowel comes equipped with four combination blades, equally spaced in a radial pattern, attached to the vertical rotating shaft by means of the spider assembly.

Guard Ring

This unit is equipped with a safety guard ring to help prevent objects from coming into contact with the rotating blades while the trowel is in operation.

Centrifugal Safety Stop Switch

In the event of a trowel runaway condition (the operator releases the handlebar during operation), the centrifugal safety stop switch will stop the engine and bring the trowel to a halt.

TRAINING

For proper training, please use the ***Training Checklist*** form located in the front of this manual. This checklist will provide an outline for an experienced operator to provide training to a new operator.

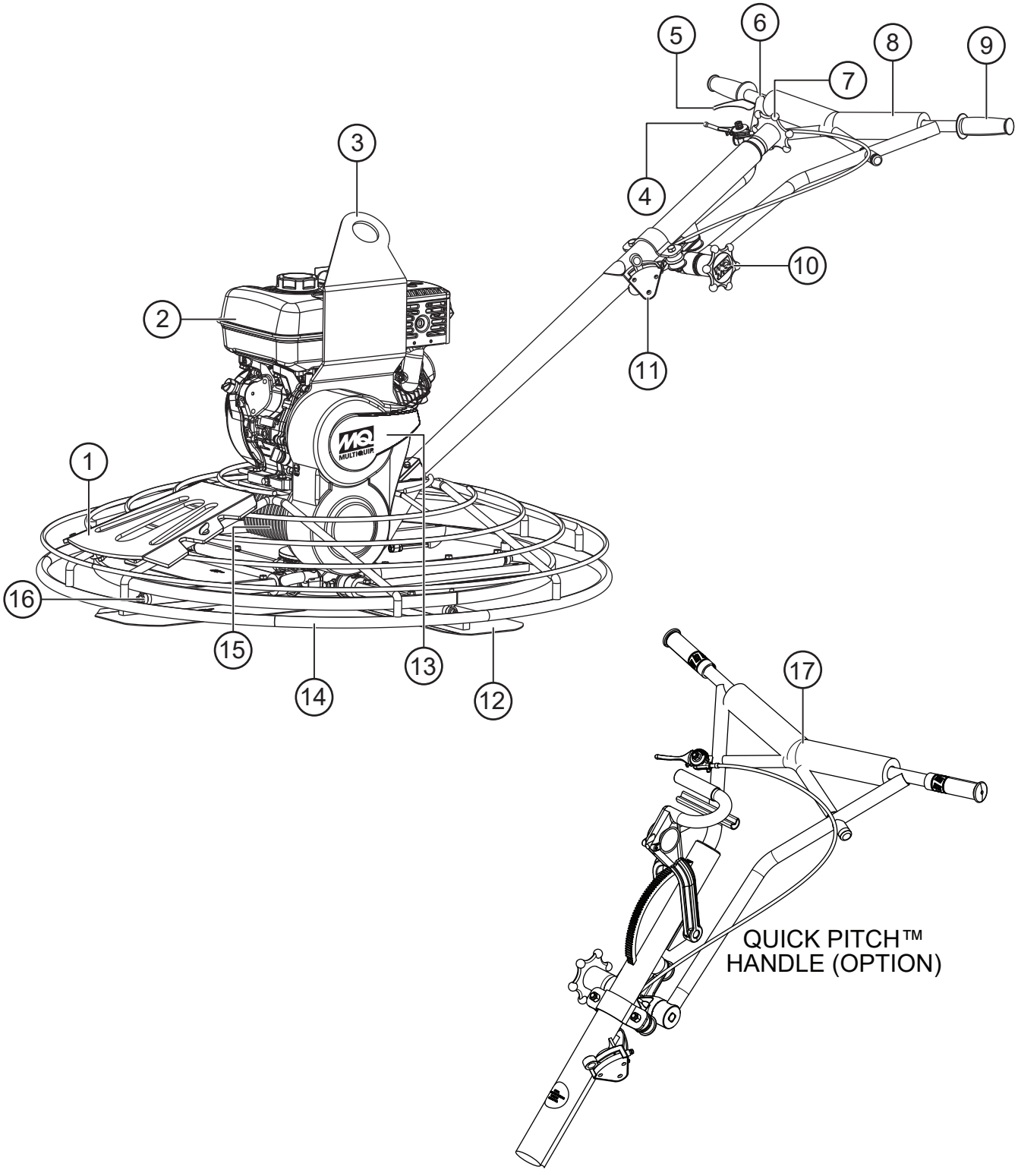

Figure 3. Trowel Components

Figure 3 shows the location of the basic trowel components. Listed below is a brief explanation of each component.

1. **Access Panel** — Allows access to the blade area. **NEVER** run the trowel with the access panel removed.
2. **Engine** — Vanguard 6.5-horsepower, single-cylinder, gasoline engine. Refer to Table 2 for engine specifications.
3. **Lifting Bail** — Attach a suitable lifting device to the lifting bail whenever lifting of the trowel is required.
4. **Throttle Lever** — Controls engine speed. Returns the engine to **idle** when released.
5. **Operator Presence Lever (Optional)** — In the event of a trowel runaway condition (the operator releases the handle), the operator presence lever signals the safety stop switch which will stop the engine and bring the trowel to a halt.
6. **Vibratory Handlebar** — Rubber shock mounts/ isolators reduce trowel vibration.
7. **Pitch Control Star Wheel** — To adjust the pitch of the blades, rotate the star wheel **clockwise** to pitch the blades upward. Rotate the star wheel **counterclockwise** to pitch the blades flat (no pitch).
8. **Handlebar Pad** — Foam rubber pad that protects the body when coming into contact with the handlebar.
9. **Hand Grips (2)** — **ALWAYS** place hands on **both** hand grips when maneuvering the trowel. Replace hand grips when they become worn or damaged.
10. **Handlebar Adjuster** — Change the angle or height of the handlebar by loosening the star wheel. Adjust the handlebar to the desired location and tighten the star wheel firmly to secure the handlebar in position.
11. **Centrifugal Safety Stop Switch** — If the operator loses control of the trowel, this switch will shut down the engine.
12. **Blades (4)** — Versatile combination blades should take care of most troweling needs.
13. **V-Belt Cover** — Remove this cover to gain access to the V-belt. **NEVER** operate the trowel with this cover removed.
14. **Guard Ring** — **NEVER** put hands or feet inside the guard ring while the engine is running.
15. **Gearbox** — Helical worm gear drive gearbox. Provides rotation of blades via engine interface. **ALWAYS** check the gearbox oil level (sight glass) prior to each use. Fill with Chevron Cetus HiPerSYN 460 synthetic oil as needed.
16. **Trowel Arms (4)** — Combination blades attach here. In addition, float pans can be attached to the trowel arms that will allow the trowel to 'float' on wet concrete.

NOTICE

NEVER operate the trowel with a bent, broken, or out-of-adjustment trowel arm. If the blades show uneven wear patterns, or some blades wear out faster than others, the trowel arm may need to be adjusted. Refer to the ***Maintenance*** section for more information.

17. **Quick Pitch™ Control Handle** — To adjust the pitch of the blades upward using the Quick Pitch™ handle, simply pull the T-handle backward while squeezing the trigger. Push the T-handle forward to pitch the blades flat (no pitch). **Contact Multiquip unit sales to purchase this option.**

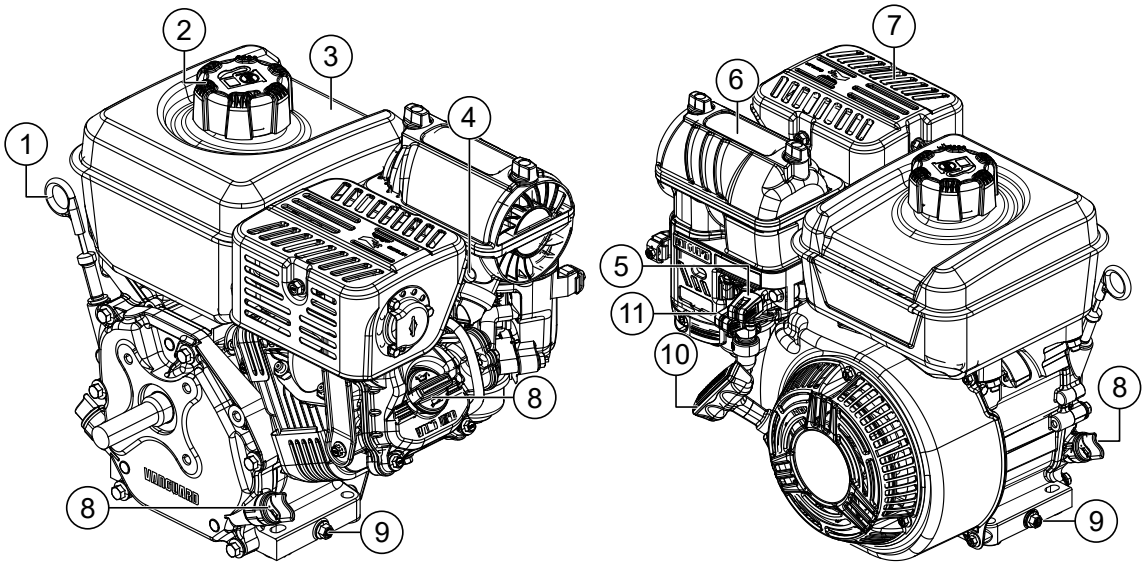

Figure 4. Basic Engine Components

INITIAL SERVICING

The engine (Figure 4) must be checked for proper lubrication and filled with fuel prior to operation. Refer to the manufacturer's engine manual for detailed operation and service instructions.

1. **Engine Oil Dipstick** — Remove to determine if engine oil is low.
2. **Fuel Filler Cap** — Remove to add unleaded gasoline to the fuel tank. Make sure the cap is tightened securely. **NEVER** overfill.

DANGER



NEVER fill the fuel tank while the engine is running or hot. In the event of a fuel spill, **DO NOT** start the engine until all fuel residue has been wiped up and the area surrounding the engine is dry. Fuel is **extremely flammable** and can ignite if it comes into contact with hot engine parts or sparks from the ignition system.

3. **Fuel Tank** — Holds up to 3.2 quarts (3.1 liters) of unleaded gasoline.
4. **Spark Plug** — Provides spark to the ignition system. Set the spark plug gap according to the engine manufacturer's instructions, and clean the spark plug once a week.
5. **Throttle Lever** — Adjusts engine speed (RPM). Also acts as the engine stop. Place the throttle lever in the **OFF** position to close the fuel valve and stop the engine.
6. **Air Cleaner** — Prevents dirt and other debris from entering the fuel system.

NOTICE

Operating the engine without an air filter, or with a damaged or worn air filter in need of replacement, will allow dirt to enter the engine, causing rapid engine wear.

7. **Muffler** — Reduces noise and emissions. **DO NOT** touch the muffler while it is hot.

WARNING



Engine components can generate extreme heat. To prevent burns, **DO NOT** touch these areas while the engine is running or immediately after operating. **DO NOT** operate the engine with the muffler removed.

8. **Oil Filler Cap (3)** — Add engine oil through this port as recommended in Table 5.
9. **Oil Drain Bolt (2)** — Remove to drain oil from the engine crankcase.
10. **Recoil Starter** — Manual starting mechanism. Pull the starter grip slowly until resistance is felt, then pull briskly and smoothly to start the engine.
11. **Choke Lever** — Aids in starting a cold engine or starting in cold weather conditions. The choke enriches the fuel mixture.

UNPACKING THE HANDLE

The handle (Figure 5) is shipped in the folded, or stowed, position.

1. To place the folding upper handle in the operational position, turn the star wheel **counterclockwise** to release it from its folded/stowed position.
2. Pull back on the upper handle to place the handle in the operational position. Turn the star wheel **clockwise** to secure the handle firmly in place.

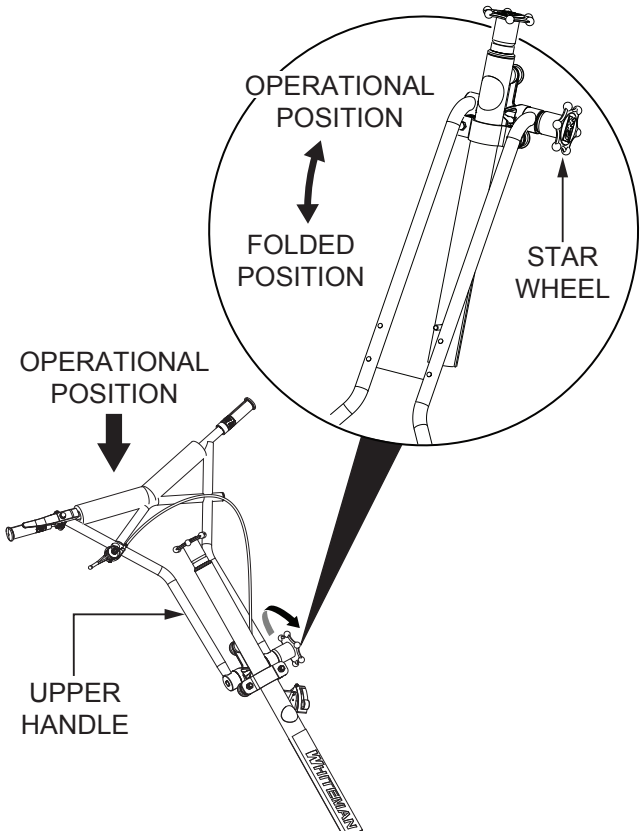

Figure 5. Unpacking The Handle

ASSEMBLY AND INSTALLATION

Some components must be installed before the trowel can be operated. This section provides general instructions on how to install these components. **For more detailed *handle* assembly intructions, contact Multiquip and request Instruction Sheet P/N 20485.**

Handle Tube Installation

Attach the main handle (tube) to the gearbox using the supplied hardware as shown in Figure 6.

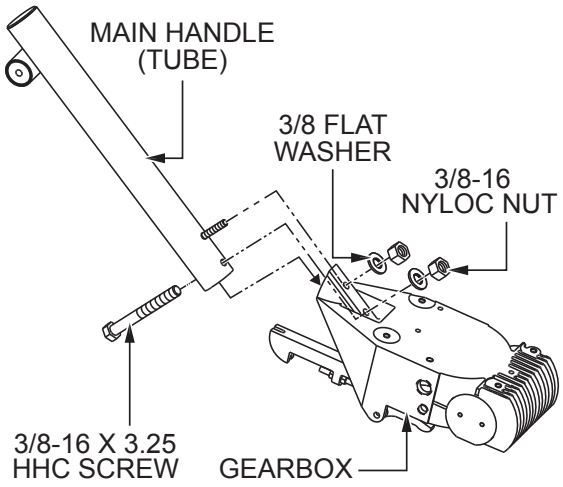

Figure 6. Handle Tube Installation

Vibratory Handlebar Adjustment

The vibratory handlebar is already attached to the main handle tube.

To adjust the height of the handlebar, loosen the star wheel (Figure 7), and move the handlebar to the desired position. Tighten the star wheel firmly to secure.

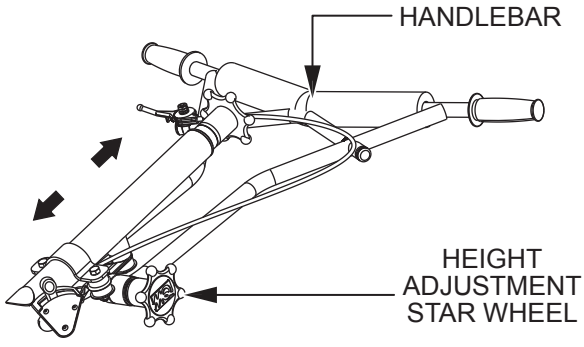

Figure 7. T-Handle Bar Adjustment

NOTICE

If additional handlebar adjustment is desired, a trowel handle wedge kit (P/N 2576) can be purchased from your Multiquip dealer.

The wedges are placed between the handle and the gearbox, which will move your handle operating position approximately 3 inches (76 mm) up or down. The kit comes complete with wedges, new bolts, and installation instructions.

Throttle Cable Installation

1. Uncoil the throttle cable and housing.
2. Make sure the throttle cable is fed through the tube on the underside of the handle and secured to the upper handle and main tube with zip ties.
3. Place the throttle lever (Figure 8) in the **RUN** position.

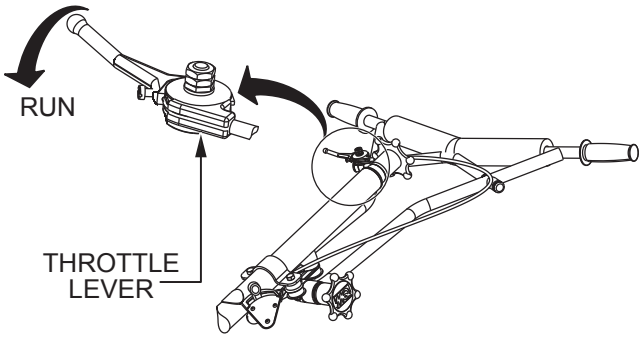

Figure 8. Throttle Lever (RUN)

4. Loosen the **fasteners** and remove the **air cleaner cover** (Figure 9).

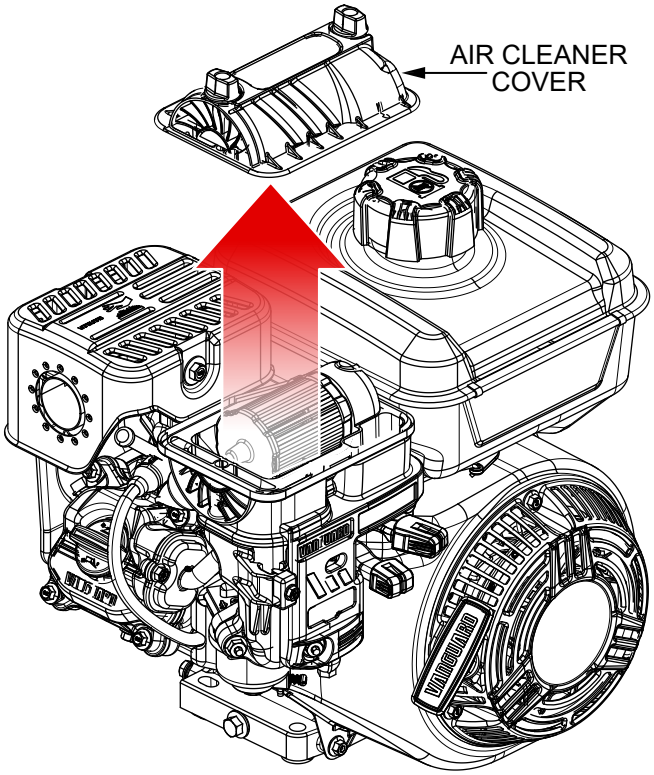

Figure 9. Remove The Air Cleaner Cover

5. Using a 10 mm socket, remove the **2 nuts and 1 bolt** (Figure 10) securing the **housing cover plate** to the engine. Remove the cover plate and set it aside. Retain the hardware for later.

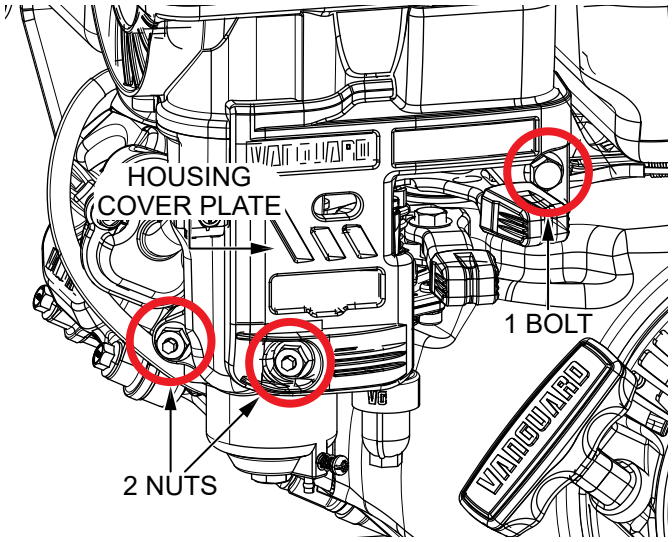

Figure 10. Housing Cover Plate And Hardware

6. Using a 10 mm deep socket or wrench, remove the **nut** (Figure 11) securing the **housing** to the engine. Retain the nut for later.

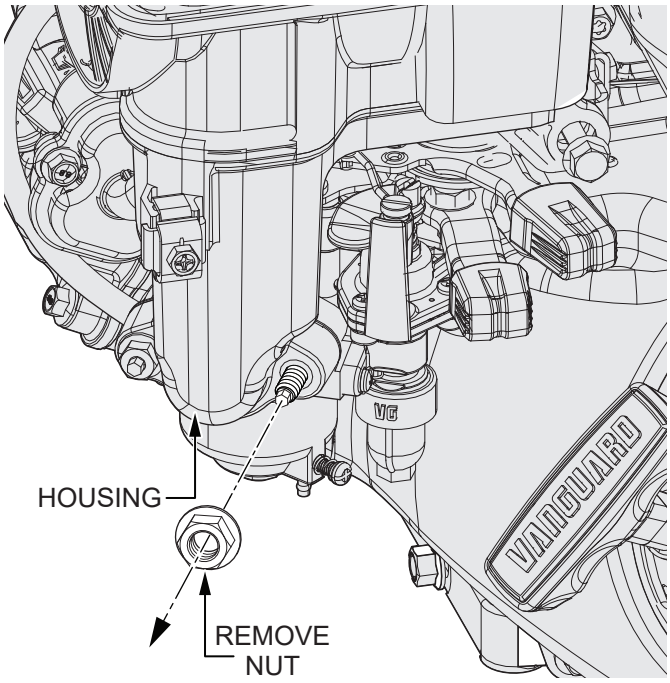

Figure 11. Remove Housing Hardware

7. Disconnect the **breather tube** (Figure 12) from the **housing** and remove the housing.

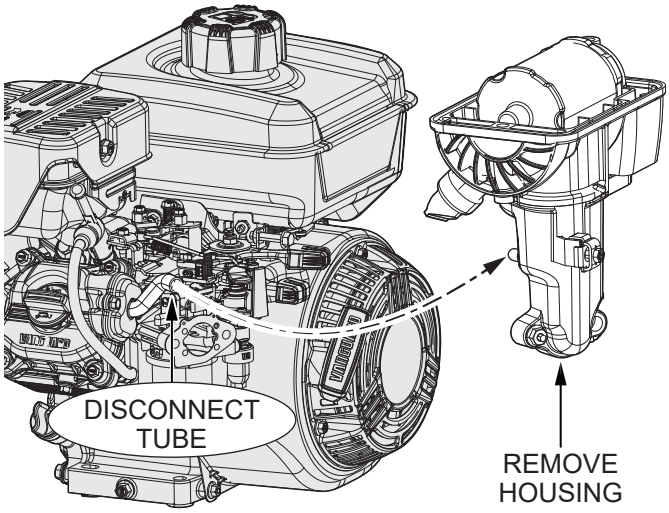

Figure 12. Remove Housing

8. Remove the **throttle cable clamp** (Figure 13).

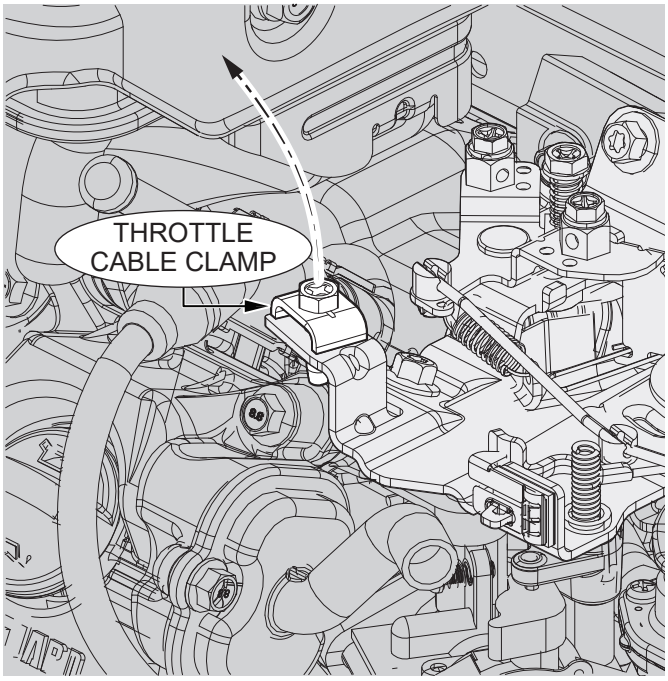

Figure 13. Remove Throttle Cable Clamp

9. Place the **throttle spring** (Figure 14) onto the end of the **throttle cable**.

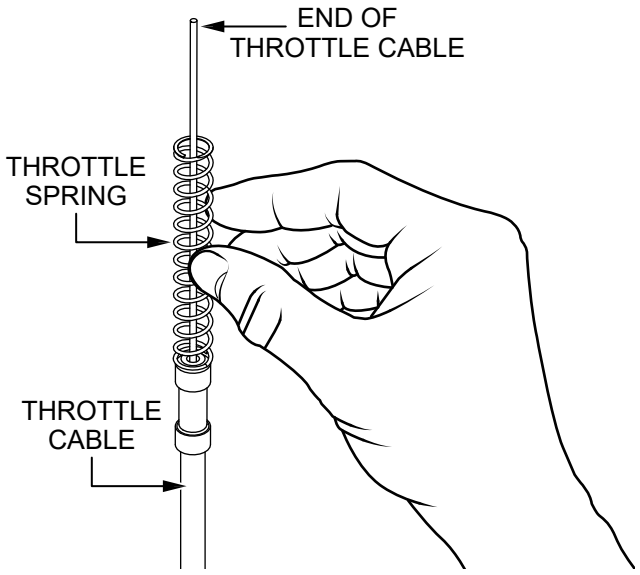

Figure 14. Install Throttle Spring

10. Run the **end of the throttle cable** (Figure 15) through the hole on the throttle housing and tighten the **screw**.

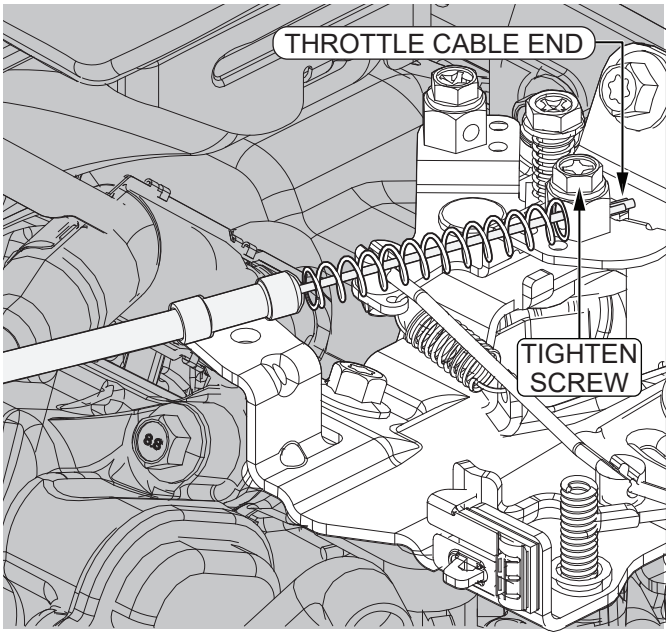

Figure 15. Install Throttle Cable

11. Reinstall the **throttle cable clamp** (Figure 16) to secure the **throttle cable** in place.

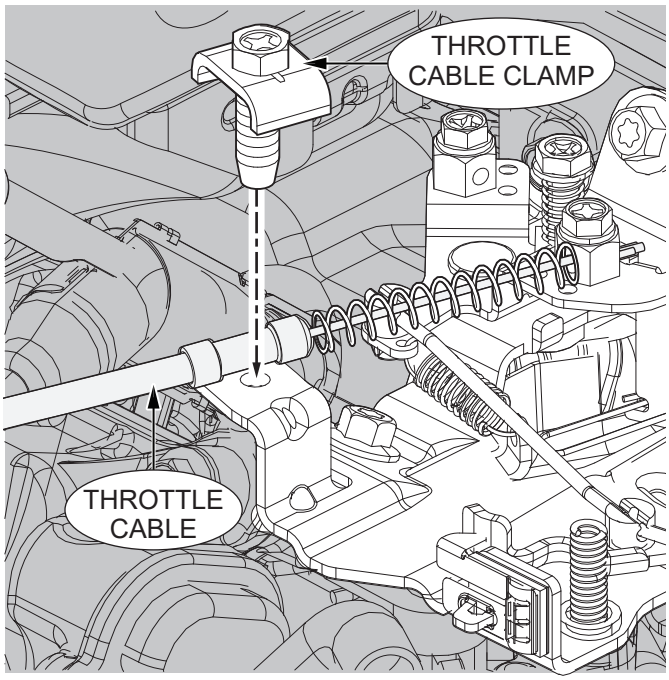

Figure 16. Reinstall Throttle Cable Clamp

12. Engage the **throttle lever** (Figure 17) to replace the **housing**. Reattach the **breather tube** to the back of the **housing**.

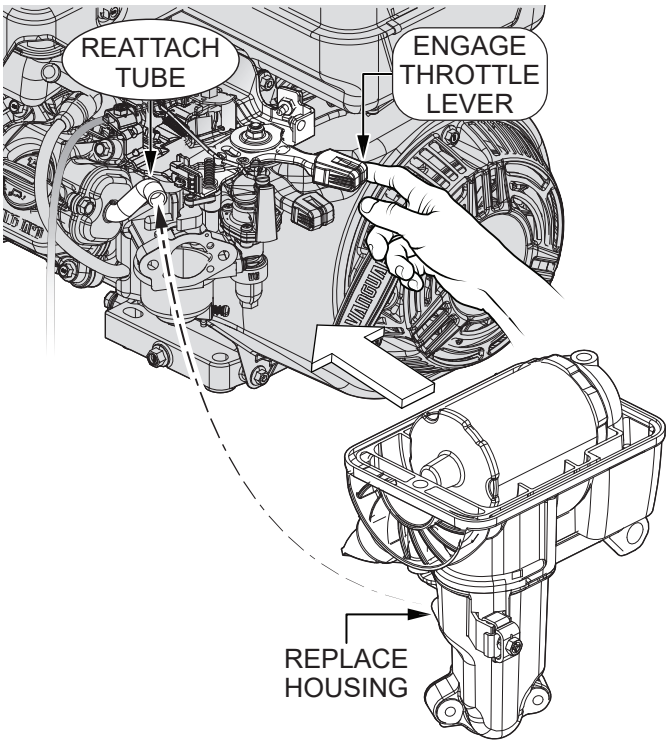

Figure 17. Replace Housing

13. Secure the **housing** in place using the **nut** (Figure 18) that was removed earlier.

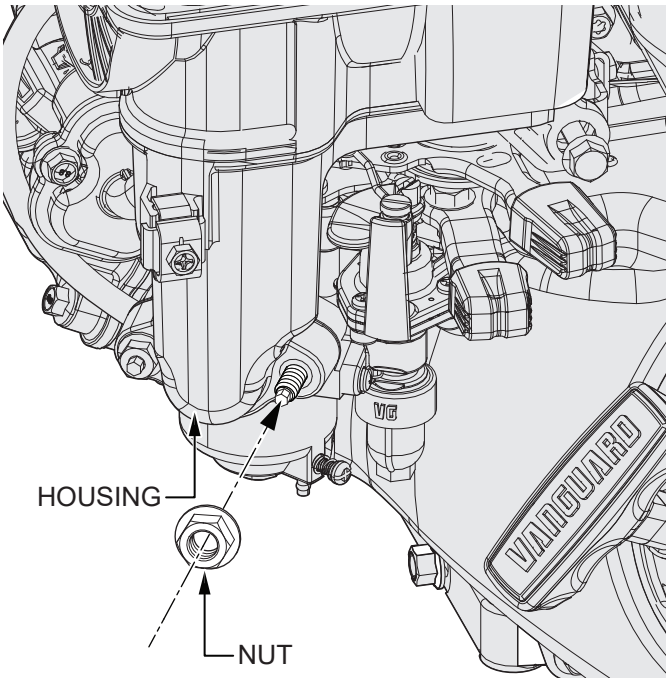

Figure 18. Secure Housing With Nut

14. Reinstall the **housing cover plate** (Figure 10) and secure it using the **bolt** and **two nuts** that were removed earlier.
15. Reinstall the air cleaner cover.
16. On the throttle lever, slightly loosen the locking nut and cable retaining screw (Figure 19).

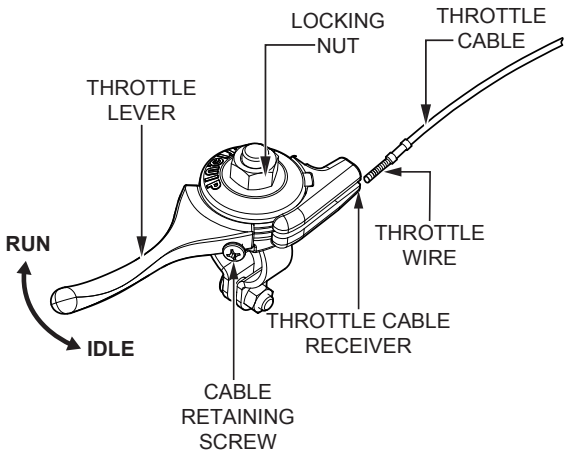

Figure 19. Adjust Cable Tension

17. Make sure the throttle cable is seated in the throttle cable receiver (Figure 19).
18. Route the throttle wire approximately 1/2 inch past the cable retaining screw (Figure 19). Tighten the cable retaining screw to secure the throttle wire.
19. Adjust cable tension as needed by loosening or tightening the locking nut and cable retaining screw on the throttle lever (Figure 19).

NOTICE

If the throttle lever does not return to the **neutral** position with the throttle backed off, loosen the adjusting nut 1/2 turn at a time, tighten, and recheck. Readjust throttle tension as necessary.

Centrifugal Safety Stop Switch Connection

Connect the black tail wire from the engine to the black safety stop wire from the centrifugal stop switch as shown in Figure 20.

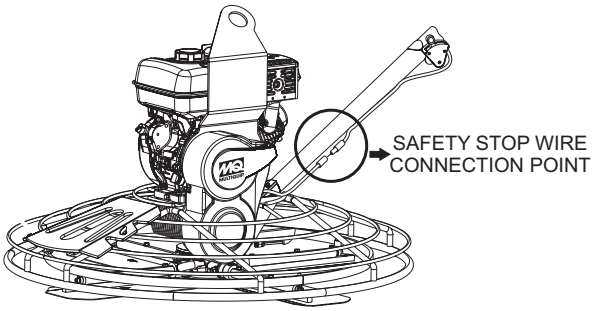

Figure 20. Centrifugal Safety Stop Switch Connection

Blade Pitch Cable Installation

1. For trowels equipped with a **standard** handle, turn the star wheel **counterclockwise** to release tension on the blade pitch cable. See Figure 21.

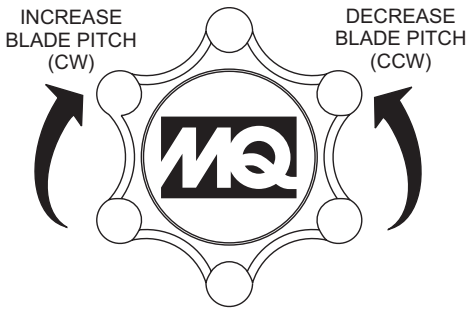

Figure 21. Blade Pitch Cable Adjustment (Standard Handle)

2. For trowels equipped with a **Quick Pitch™** handle, squeeze the trigger lock and push the T-handle towards the engine to release tension on the blade pitch cable. See Figure 22.

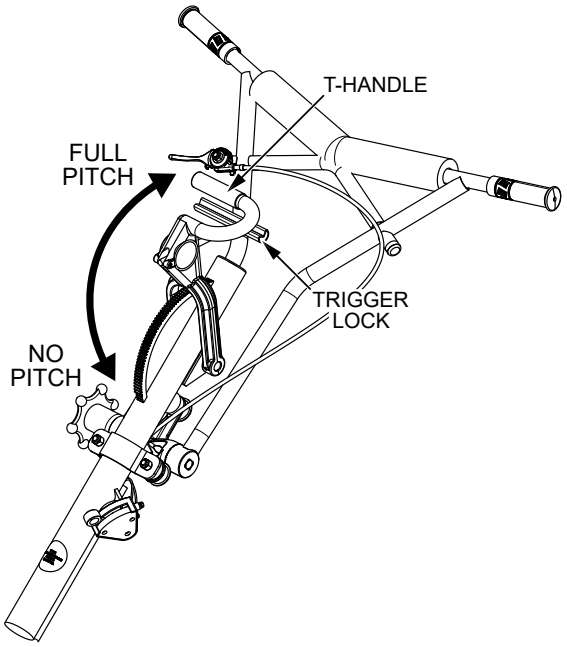

Figure 22. Blade Pitch Cable Adjustment (Quick Pitch™ Handle)

⚠ WARNING

The Quick Pitch™ T-handle is under spring tension and can snap in the direction of force (toward the user) if not firmly grasped, which may cause bodily injury.

3. Remove brass set nut #1 from the end of the blade pitch cable (Figure 23).

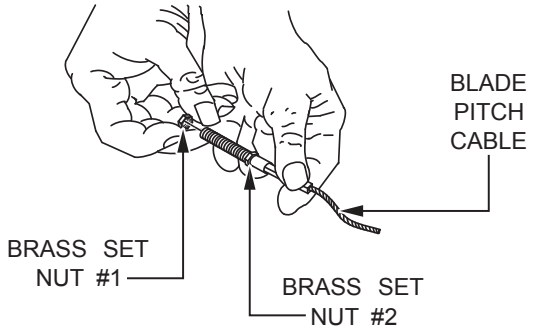

Figure 23. Blade Pitch Cable

4. Thread brass set nut #2 as far as possible towards the blade pitch cable (Figure 23).

5. Insert the blade pitch cable end through the yoke eyelet (Figure 24). Tighten brass set nut #1 by hand to remove all slack from the cable.

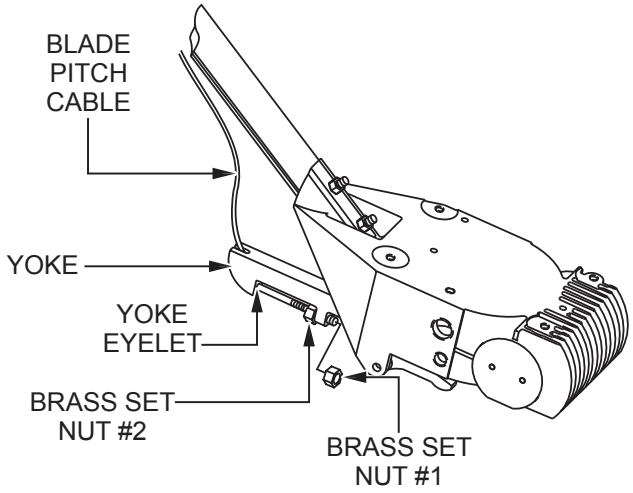

Figure 24. Cable Yoke Attachment

6. Tighten brass set nut #2 against the yoke boss to secure the cable in place.

7. Tighten brass set nut #1 against the yoke boss.

Pre-Load Adjustment (Quick Pitch™ Handle Only)

WARNING

The Quick Pitch™ handle is spring-loaded. Personal injury or damage can result from improper handling, installation, or adjustment. **Use extreme caution** when handling this component.

After the Quick-Pitch™ handle has been installed, spring pre-load adjustment is required.

1. Locate the spring pre-load adjustment screw (Figure 25) on the underside of the handle tube.

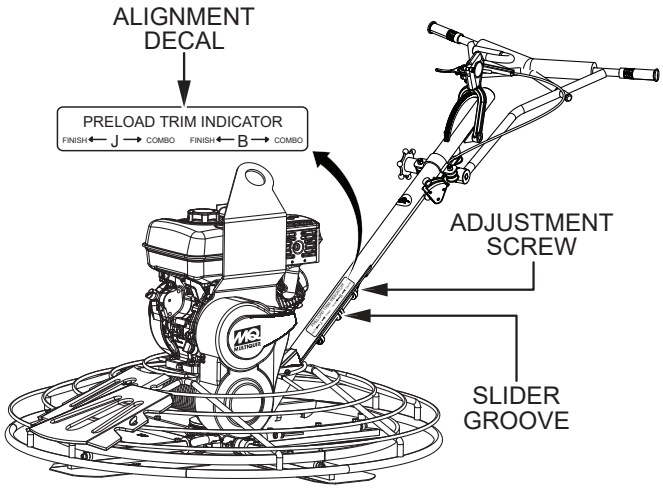

Figure 25. Spring Pre-Load Adjustment

2. An alignment decal (Figure 25) has been placed on the side of the handle tube to assist the user in the adjustment of the Quick-Pitch™ handle spring. Align the groove on the slider with the letter **'J'** on the decal.

CAUTION

ALWAYS wear approved eye and hearing protection while operating the trowel.

NEVER place hands or feet inside the guard ring while the engine is running. **ALWAYS** shut the engine down before performing any maintenance service on the trowel.

Float Pan Installation (Optional)

Float pans attach to the trowel blades and allow the trowel to 'float' on wet concrete. The disc design facilitates early floating and easy movement from wet to dry areas. Float pans are also very effective at embedding large aggregates and surface hardeners.

Installing Float Pans With Z-Clips

Refer to Figure 26.

1. Lift the trowel just enough to slide the float pan under the blades. Lower the trowel onto the pan with the blades adjacent to the Z-clips.

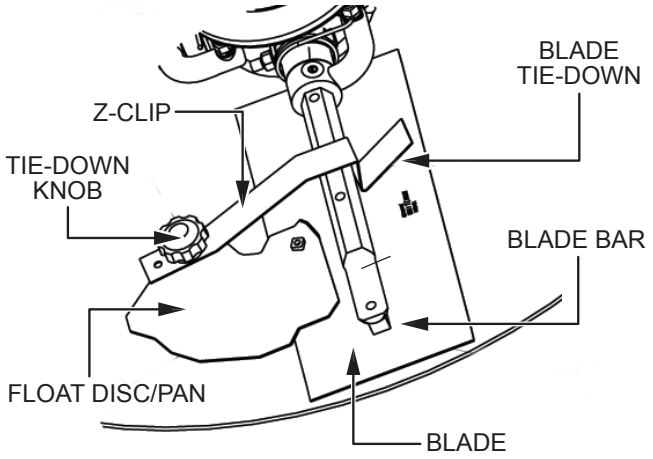

Figure 26. Float Pan Installation (Z-Clips)

2. Rotate the blades into position under the Z-clips. Be sure to rotate the blades in the operational direction of travel, or use the engine to rotate the blades into position.
3. Secure the blade tie-downs to the far side of the Z-clip brackets with the tie-down knobs.
4. Make sure the blade edges are secured under the Z-clips, and the tie-downs are secured completely over the edges of the blade bar.

Installing Float Pans With Latch Pins

1. Lift the trowel just enough to slide the float pan under the blades. Lower the trowel onto the pan with the blades between the blade stops (Figure 27).

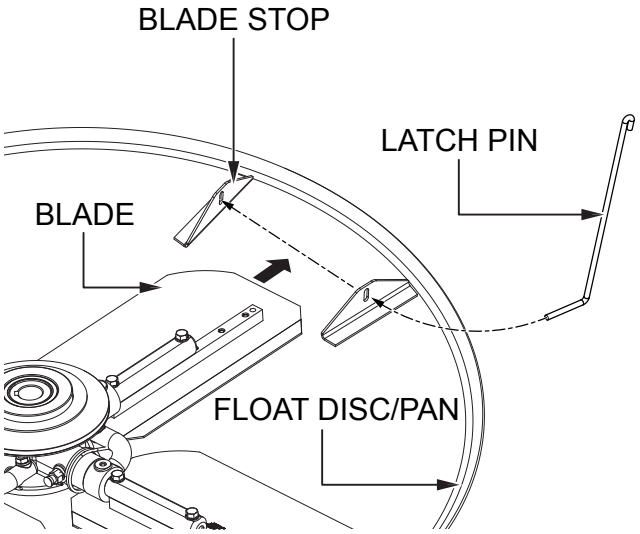

Figure 27. Float Pan Installation (Latch Pins)

2. Fit the blades between the blade stops. Be sure to rotate the blades in the operational direction of travel, or use the engine to rotate the blades into position.
3. Route the latch pins through the blade stop holes as shown in Figure 27.
4. After it has been routed through the blade stop holes, rotate each latch pin so the end that is bent approximately 90 degrees lays flat on the surface of the float pan. See Figure 28.

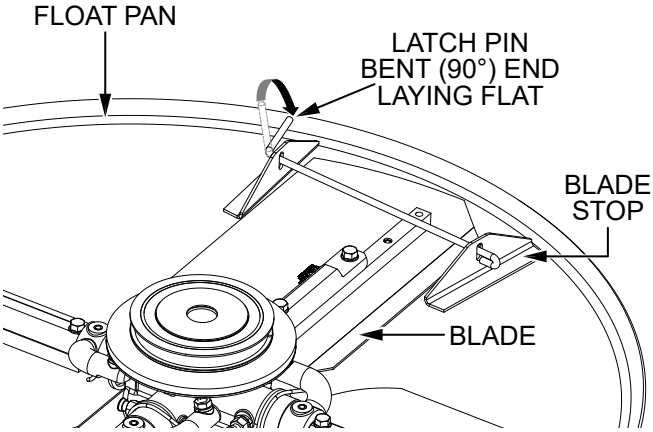

Figure 28. Latch Pin Placement

5. Make sure the blade edges are secured between the blade stops, and the latch pins are secured completely over the blades, locking them in place.
6. Periodically check the latch pins during normal operation to ensure they are still in the correct position.

ENGINE OIL

1. Place the trowel on secure, level ground with the engine **OFF**.
2. Remove the dipstick (Figure 29) from the engine oil filler hole and wipe it clean.

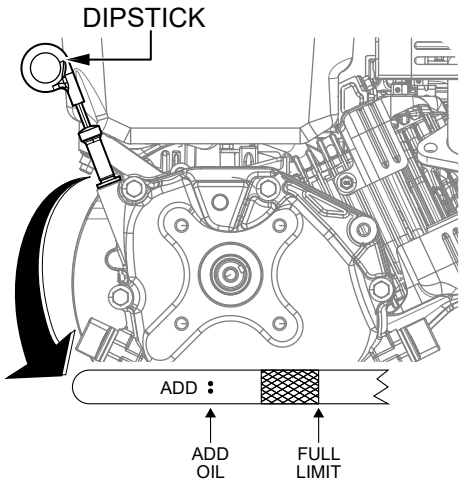

Figure 29. Engine Oil Dipstick

3. Reinsert the dipstick, then remove it again and check the oil level shown on the dipstick (Figure 29). The correct oil level is at the top of the full indicator on the dipstick.
4. If the oil level is low, remove one of the oil filler caps (Figure 30) and fill with the recommended oil type listed in Table 5. **DO NOT** overfill. Refer to Table 2 for maximum engine oil capacity.

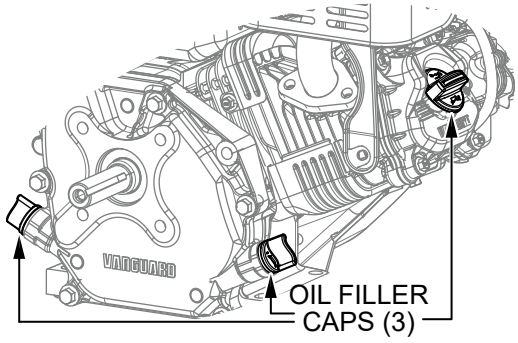

Figure 30. Oil Filler Caps

Table 5. Recommended Oil Viscosity Grades

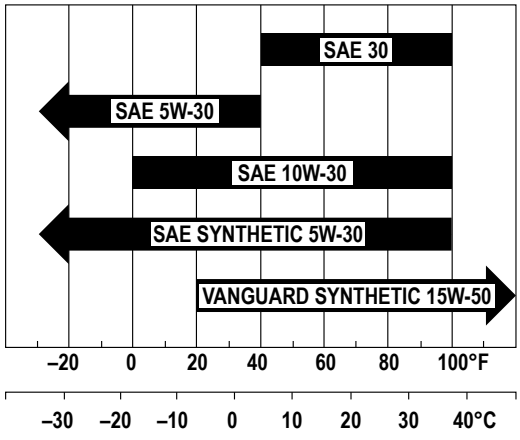

FUEL

Remove the fuel filler cap and inspect the fuel level in the tank. If fuel is low, replenish with unleaded fuel.

DANGER

Motor fuels are **highly flammable** and can be dangerous if mishandled. **DO NOT** smoke while refueling. **NEVER** attempt to refuel while the engine is **running** or **hot!**

WARNING

ALWAYS use a strainer for filtration while refueling. **NEVER** top off fuel. **ALWAYS** wipe up any spilled fuel immediately.

GEARBOX OIL

1. Look at the sight glass on the side of the gearbox (Figure 31) to determine if gearbox oil is low. The correct oil level is to the halfway point on the sight glass.

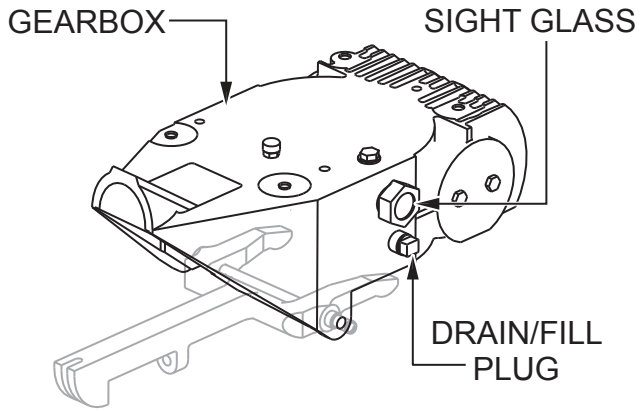

Figure 31. Gearbox Oil

2. If gearbox oil is low, remove the drain/fill plug (Figure 31) and fill with Chevron Cetus HiPerSYN 460 synthetic oil until the correct oil level is reached. Replace the drain/fill plug when finished.
3. If there is too much oil in the gearbox, remove the drain/fill plug and allow the oil to seep out. Replace the plug once the correct oil level is reached.

V-BELT

1. Inspect the V-belt (Figure 32) to determine if it is frayed, peeling, full of tiny cracks, has pieces of rubber missing, or is otherwise damaged.

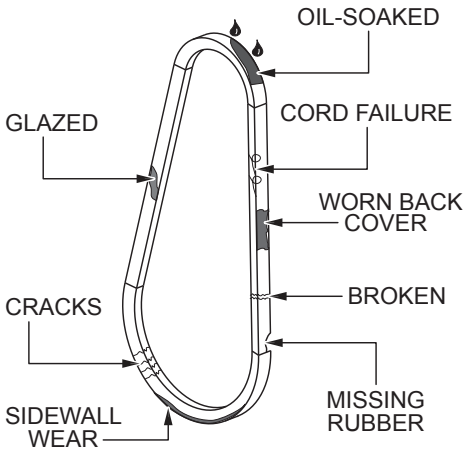

Figure 32. V-Belt Inspection

2. Inspect the V-belt (Figure 32) to determine if it is oil-soaked or glazed (a hard, shiny appearance on the sides of the belt). Either of these conditions can cause overheating of the belt, which may weaken the belt and increase the danger of it breaking.
3. Replace the V-belt immediately if any of the aforementioned wear conditions are observed.

BELT GUARD

Inspect the belt guard (Figure 33) for damage, and for loose or missing hardware.

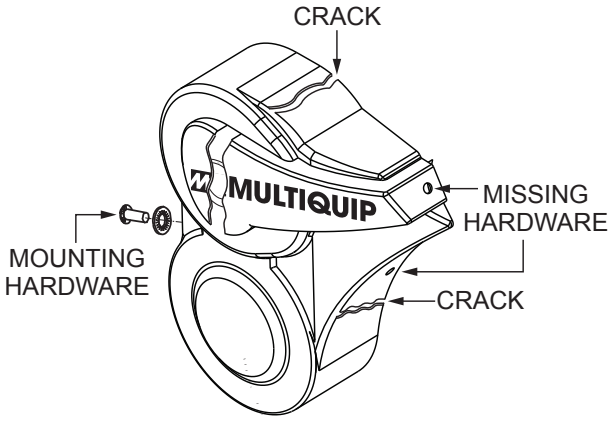

Figure 33. Belt Guard Inspection

BLADES

Inspect the trowel blades for wear or damage (Figure 34). If one blade is worn out while the others look new, there could be a blade pitch problem. Refer to the ***Maintenance*** section of this manual for the blade pitch adjustment procedure. Replace any worn or damaged blades immediately.

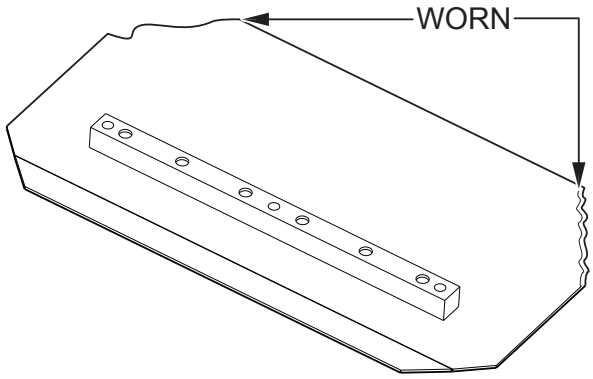

Figure 34. Blade Inspection

CENTRIFUGAL SAFETY STOP SWITCH

Your trowel is equipped with a centrifugal safety stop switch (Figure 35). This switch should be tested every time the engine is started.

The switching mechanism should operate freely, and should always be kept in this condition. With the switch in the **OFF** position, the engine should not start or run. The purpose of this switch is to stop the engine in a runaway situation (i.e. the operator releases the handle during operation).

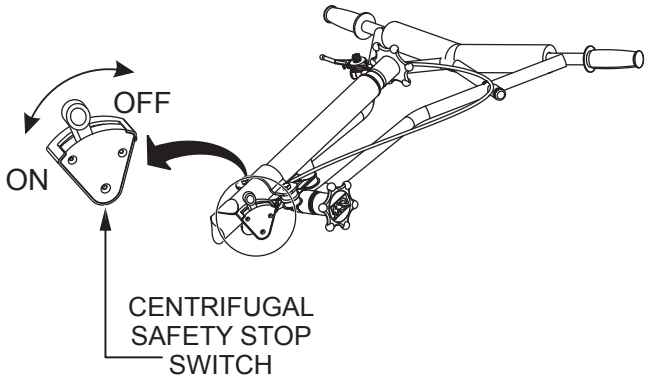

Figure 35. Centrifugal Safety Stop Switch

BEFORE STARTING

1. Clean the trowel, particularly the engine cooling air inlet. Remove all dirt and dust.
2. Inspect the engine air cleaner for dirt and dust. If the air cleaner is dirty, replace it with a new one.
3. Inspect the carburetor for external dirt and dust. Clean with dry compressed air as needed.
4. Inspect all fastening nuts and bolts for tightness.

NOTICE

DO NOT attempt to operate the trowel until the ***Safety***, ***General Information*** and ***Inspection*** sections of this manual have been read and thoroughly understood.

This section is intended to assist the operator with the initial startup of the walk-behind trowel. It is extremely important that this section be read carefully before attempting to use the trowel in the field. **DO NOT** use your trowel until this section is thoroughly understood.

STARTING THE ENGINE

1. Place the handlebar throttle lever in the **IDLE** position (Figure 36).

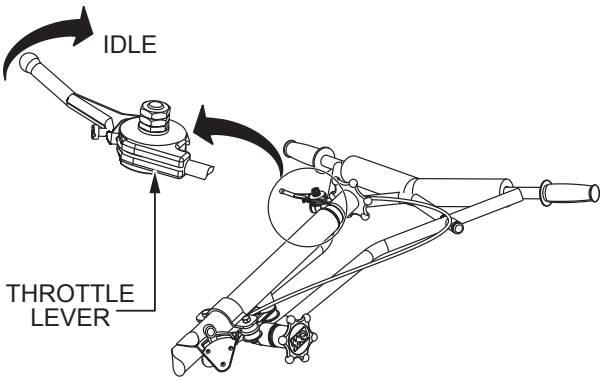

Figure 36. Handlebar Throttle Lever (IDLE)

2. Make sure the engine throttle lever (Figure 37) is in the **RUN** position.

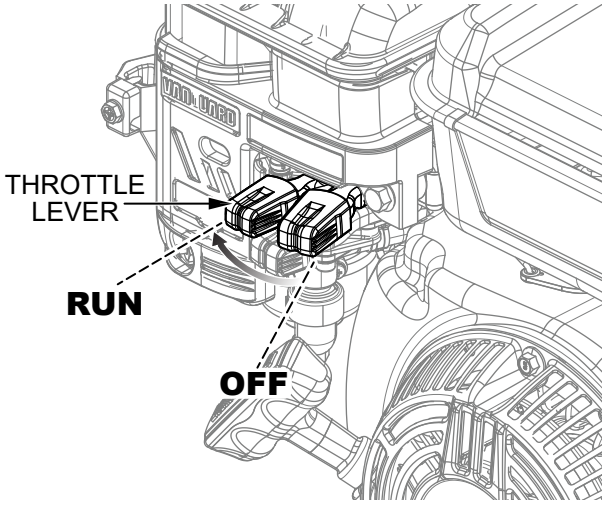

Figure 37. Engine Throttle Lever (Run)

3. Place the centrifugal safety stop switch in the **ON** position (Figure 38).

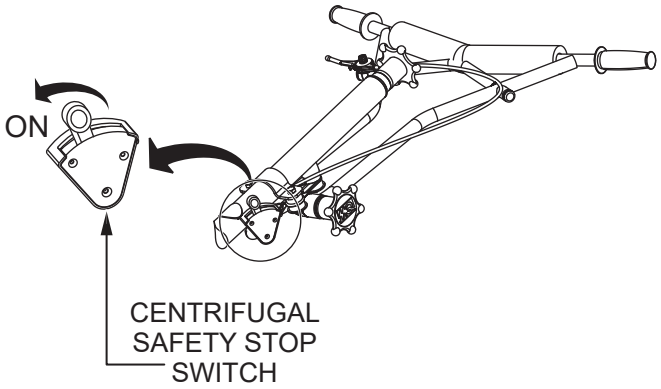

Figure 38. Centrifugal Safety Stop Switch (ON)

4. If starting a cold engine, place the engine choke lever in the **CLOSED** position (Figure 39).

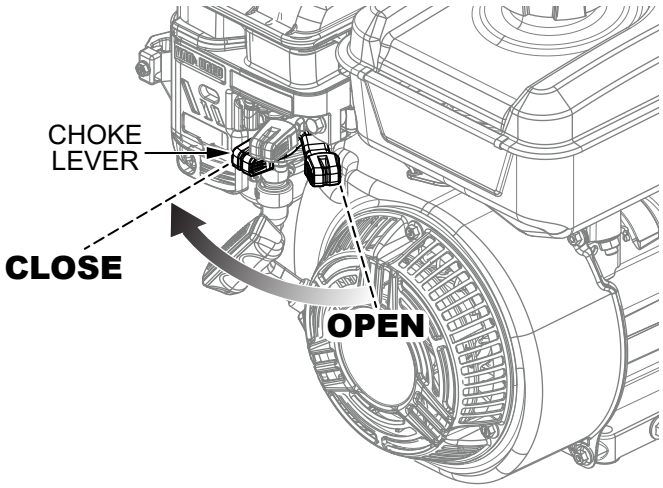

Figure 39. Choke Lever (Closed)

5. If starting a warm engine, place the engine choke lever in the **OPEN** position (Figure 40).

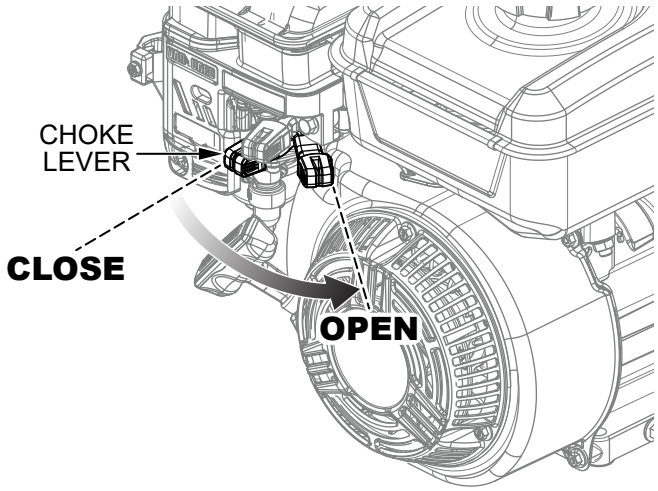

Figure 40. Choke Lever (Open)

6. Slowly pull the starter grip (Figure 41) until resistance is felt, then pull briskly and smoothly to start the engine. Gently return the starter grip to its original position.

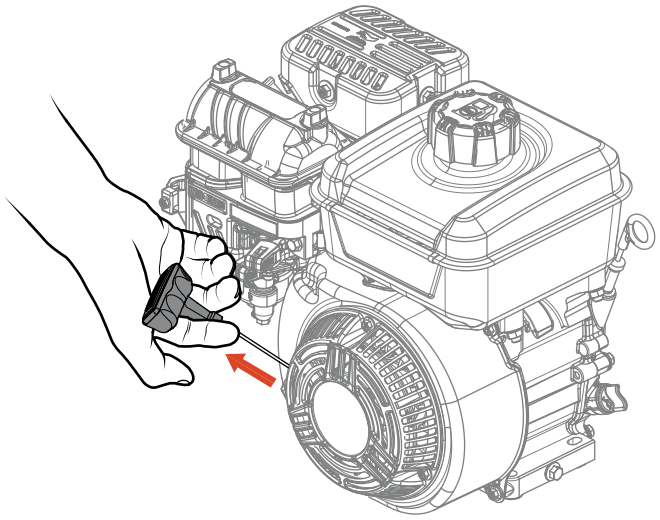

Figure 41. Starter Grip

7. If the engine has started, slowly return the choke lever to the **OPEN** position (Figure 40) as the engine warms. If the engine has not started, repeat steps 1–5.

8. Before operating the trowel, run the engine for several minutes and check for fuel leaks and loose components.

CENTRIFUGAL SAFETY STOP SWITCH TEST

1. Clear the area around the trowel. Make sure it is free of debris and objects.

2. With the engine running at idle, place the safety stop switch lever in the **OFF** position (Figure 42). Verify that the engine shuts off. If the engine continues to run, replace the centrifugal safety stop switch.

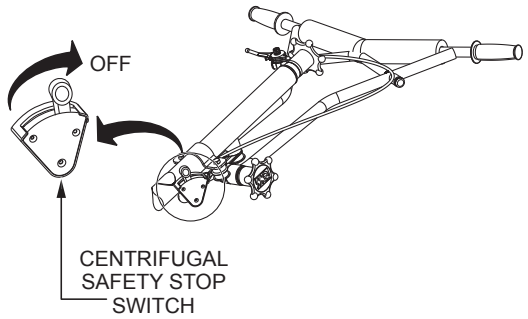

Figure 42. Centrifugal Safety Stop Switch (OFF)

3. Place the safety stop switch lever in the **ON** position, restart the engine, and let it idle.

4. Stand behind the handle in the operator's position (Figure 43) and spin the handle to the right, simulating a runaway condition. Centrifugal force should throw the safety switch outward to the **OFF** position, thus shutting off the engine.

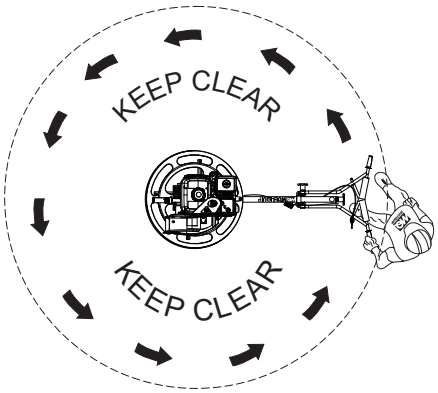

Figure 43. Centrifugal Safety Stop Switch Test

TO BEGIN TROWELING

Place the handlebar throttle lever (Figure 44) in the **RUN** position.

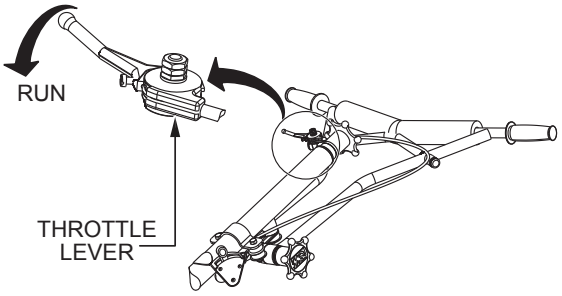

Figure 44. Handlebar Throttle Lever (RUN)

PITCHING THE BLADES

Standard Handle

To pitch the blades **upward** with the standard handle (Figure 45), turn the star wheel **clockwise**. Turn the star wheel **counterclockwise** to pitch the blades **flat** (no pitch).

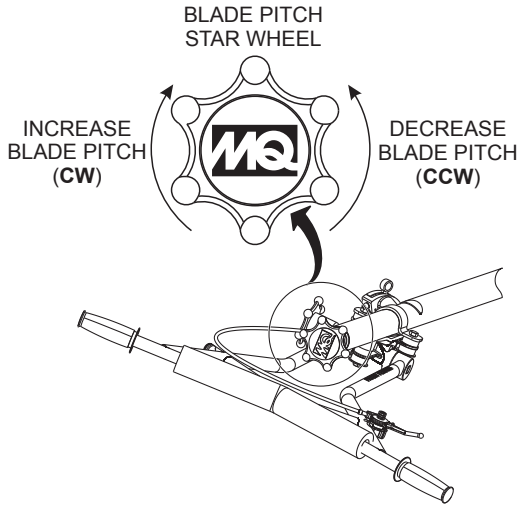

Figure 45. Pitching The Blades (Standard Handle)

Quick Pitch™ Handle

To pitch the blades **upward** with the Quick Pitch™ handle (Figure 46), pull the T-handle **backward** while squeezing the trigger lock. Push the T-handle **forward** to pitch the blades **flat** (no pitch).

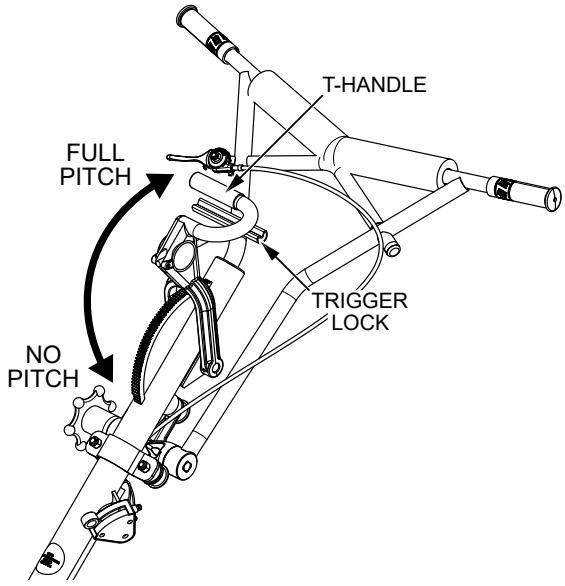

Figure 46. Pitching The Blades (Quick Pitch™ Handle)

CONCRETE FINISHING TECHNIQUES

The instructions in this manual are provided as a basic guide to trowel operation, **not** a complete guide to concrete finishing. We suggest that all operators (experienced and novice) read *Slabs on Ground* published by the American Concrete Institute.

MANEUVERING THE TROWEL

1. Stand in the operator's position behind the handle. With secure footing and a firm grasp on the handle, slowly increase the engine speed until the desired blade speed is obtained.
2. Figure 47 illustrates a typical walk-behind trowel application. Practice maneuvering the trowel. The trick is to let the trowel do the work.
3. Continue to practice maneuvering the trowel as if finishing a slab of concrete. Practice edging and covering a large area.
4. An effective finishing technique is to work **backward**. **Be careful when moving backward** so that hazards can be avoided. The best way to get accustomed to the trowel is repeated use.

To move the trowel to the operator's **left**, **lift up** on the handle. To move the trowel to the **right**, **push down** on the handle.

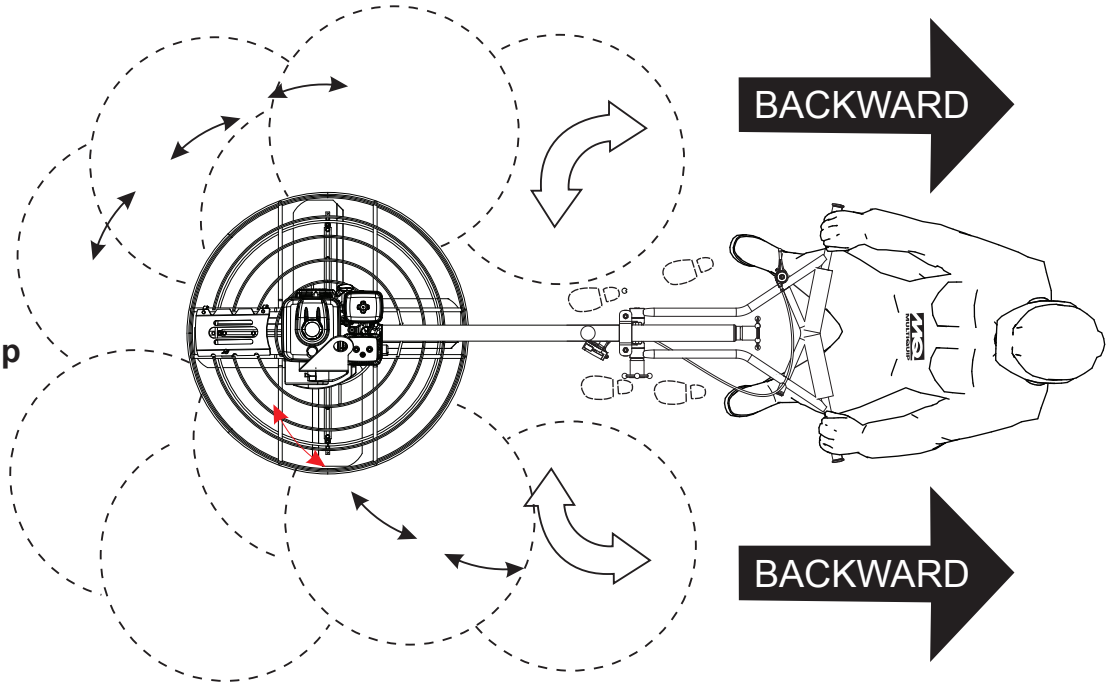

REMEMBER! If you let go of the trowel, simply **step away** and let the trowel come to a complete **STOP** before trying to recover it.

The best method for finishing concrete is to slowly walk **backward** with the trowel, guiding it from side to side. This will cover any footprints in the wet concrete.

Figure 47. Maneuvering The Trowel

⚠ CAUTION

NEVER place your **hands** or **feet** inside the guard rings while starting or operating this equipment.

⚠ CAUTION

ALWAYS stay clear of **rotating** or **moving** parts while operating this equipment.

STOPPING THE TROWEL

1. Return the handlebar throttle lever to the **IDLE** position (Figure 48) and let the engine run for three minutes at low speed.

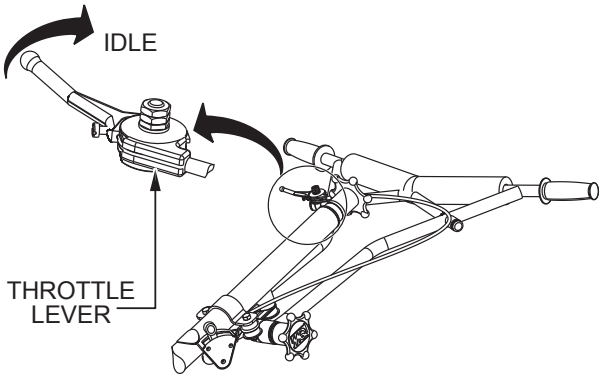

Figure 48. Handlebar Throttle Lever (IDLE)

2. After the engine has cooled, place the engine throttle lever in the **OFF** position (Figure 49). This action will also turn off the engine fuel valve.

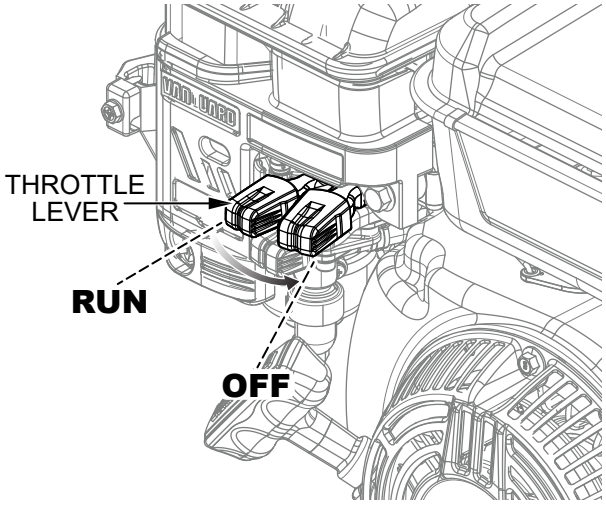

Figure 49. Engine Throttle Lever (OFF)

NOTICE

When transporting the trowel, **ALWAYS** turn off the engine fuel valve by placing the engine throttle lever in the **OFF** position.

3. Place the centrifugal safety stop switch (Figure 50) in the **OFF** position.

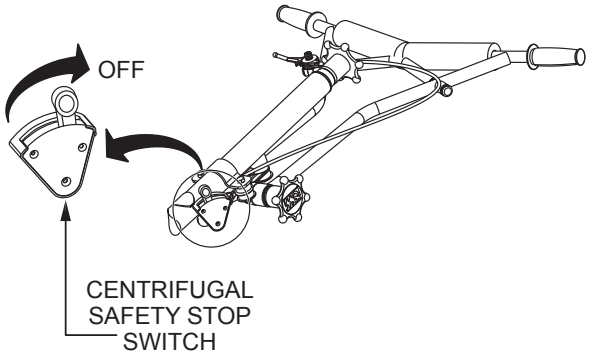

Figure 50. Centrifugal Safety Stop Switch (OFF)

HANDLES

Standard Handle

The standard walk-behind trowel handle (Figure 51) is equipped with a star wheel for blade pitch adjustment. Refer to the ***Operation*** section of this manual for more information.

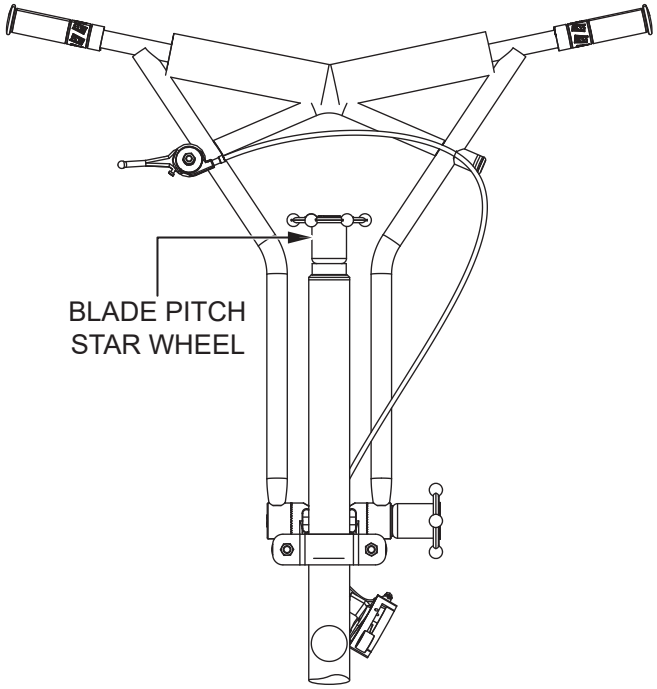

Figure 51. Standard Handle

Quick Pitch™ Handle (Optional)

The optional Quick Pitch™ handle (Figure 52) allows the operator to quickly and easily adjust blade pitch. Refer to the ***Operation*** section of this manual for more information. Please contact Multiquip unit sales to order this option.

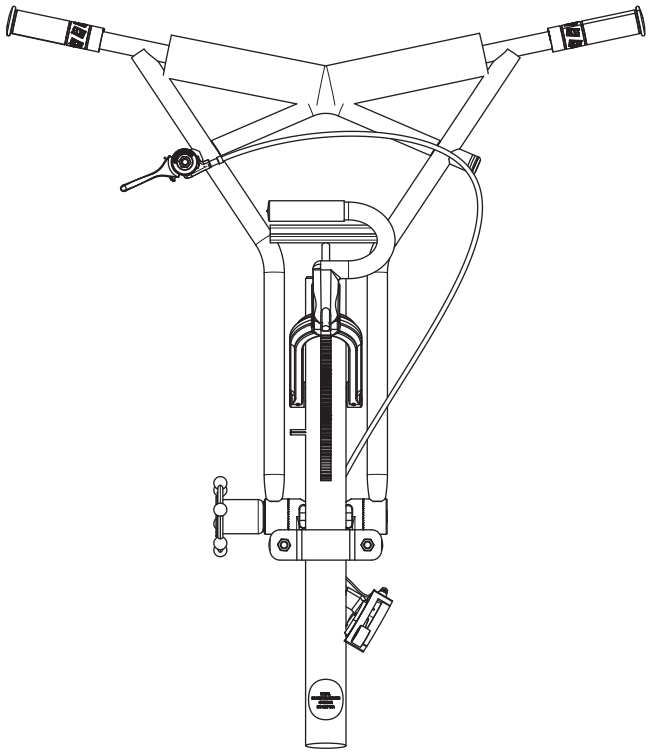

Figure 52. Quick Pitch™ Handle

BLADES AND PANS

Trowel blades are essential for finishing concrete. The blades of this trowel were built to stringent quality standards from the finest steel. Trowel blades should be replaced when they fail to finish concrete in a satisfactory manner.

If replacement blades are needed, refer to the parts manual associated with your trowel model for part numbers, and order from your Multiquip parts dealer or importer.

Combo Blades (Standard)

This trowel is equipped with combination float/finish blades (Figure 53) which provide optimal performance for both floating and finishing operations. These blades are versatile and should accomodate most troweling needs.

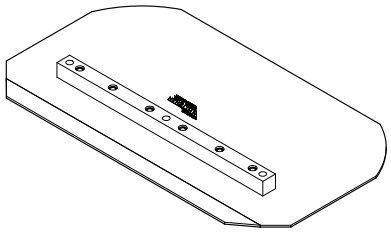

Figure 53. Combination Blade

Finish Blades (Optional)

Finish blades (Figure 54) are specifically designed for trowel finishing operations and provide premium surface finishing capability. Finish blades should **only** be used after the concrete has partially dried enough to prevent the trowel from sinking into the concrete when placed on it.

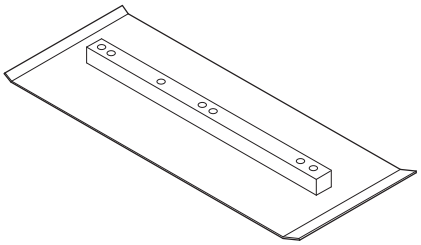

Figure 54. Finish Blade

Clip-On Float Blades (Optional)

Clip-on float blades (Figure 55) are easily installed onto existing finish blades for floating purposes. They are easily removed once floating is complete so that finishing can be started immediately.

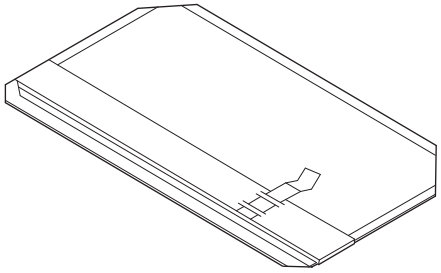

Figure 55. Clip-On Float Blade

Float Pans (Optional)

Float pans (Figure 56) attach to the spider assembly and allow the trowel to float on wet concrete. The disc design allows early floating and easy movement from wet to dry areas. Float pans are also very effective at embedding large aggregates and surface hardeners.

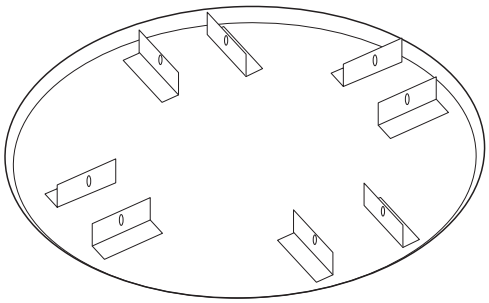

Figure 56. Float Pan

> ***NOTICE***
>
> For optimal float pan performance, blade speed must be lowered using the Low Speed Kit (P/N 22587). Refer to the ***Engine and Clutch Assembly*** section of the trowel parts manual for more information.

TROWEL ARM ADJUSTMENT TOOL

If the trowel blades show uneven wear patterns or some blades wear out faster than others, the trowel arms may need to be adjusted. A trowel arm adjustment tool (P/N 1817) is available for consistent adjustment of all trowel arms. See Figure 57.

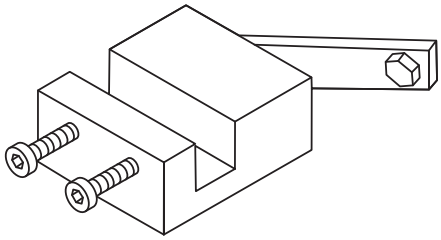

Figure 57. Trowel Arm Adjustment Tool

Table 6. Engine Maintenance Schedule							
Description[3]	**Operation**	**First 5 Hours**	**Every 8 Hours or Daily**	**Every 100 Hours or Annually**	**Every 200 Hours or Annually**	**Annually**	**Every 600 Hours or 3 Years**
Engine Oil	Check		X				
	Change	X			X		
Fuel System	Service					X	
Area Around Muffler and Controls	Clean		X				
Spark Plug	Replace					X	
Air Intake Grille	Clean		X				
Exhaust System	Service			X			
Air Filter	Clean				X(1)		
	Replace						X
Cooling System	Service					X(1)	
Valve Clearance	Check					X(2)	

(1) In dusty conditions or when airborne debris is present, clean more often.

(2) Not required unless engine performance problems are noted.

(3) For commercial use, log hours of operation to determine proper maintenance intervals.

Table 7. Trowel Maintenance Schedule					
Item	**Operation**	**Daily**	**Periodic Maintenance Interval**		
			Every 50–60 Hours	**Every 200–300 Hours**	**Every 2,000–2,500 Hours**
V-Belt	Check/Replace		X		
Relube Trowel Arms	Grease	X			
Blades	Check/Replace		X		
Trowel Arms	Remove/Clean			X	
Thrust Collar/Bushing	Remove/Clean			X	
Blade Arms	Adjust			X	
Arm Bushing	Remove/Replace				X
Wear Ring	Remove/Replace				X
Thrust Collar Bearing	Remove/Replace				X
Pitch Control Cable	Check				X
Clutch	Remove/Clean			X	

General maintenance practices are crucial to the performance and longevity of your trowel. This equipment requires routine cleaning, lubrication, and inspection of components for wear or damage.

Refer to Table 6 and Table 7 to schedule engine and trowel maintenance. The following maintenance procedures can prevent serious trowel malfunction or damage.

DANGER



NEVER use gasoline or low flash point solvents to clean the engine or any of its components. The possibility exists of **fire or explosion** which can damage the equipment and cause **severe bodily harm or even DEATH**.

WARNING



Some maintenance operations may require a running engine. **ALWAYS** make sure the maintenance area is well ventilated. Gasoline engine exhaust contains **poisonous carbon monoxide gas** that can result in **unconsciousness and/or DEATH** when inhaled.

CAUTION



ALWAYS allow the engine to cool before servicing. **NEVER** attempt to service a hot engine.

CAUTION

ALWAYS disconnect the spark plug wire from the spark plug and secure it away from the engine before performing trowel maintenance or adjustments.

ENGINE MAINTENANCE

Inspect the engine daily for cleanliness, oil or fuel leakage, and loose fasteners.

Air Cleaner

The engine air cleaner is equipped with a replaceable, high-density, paper element. Refer to Figure 58 for air cleaner maintenance.

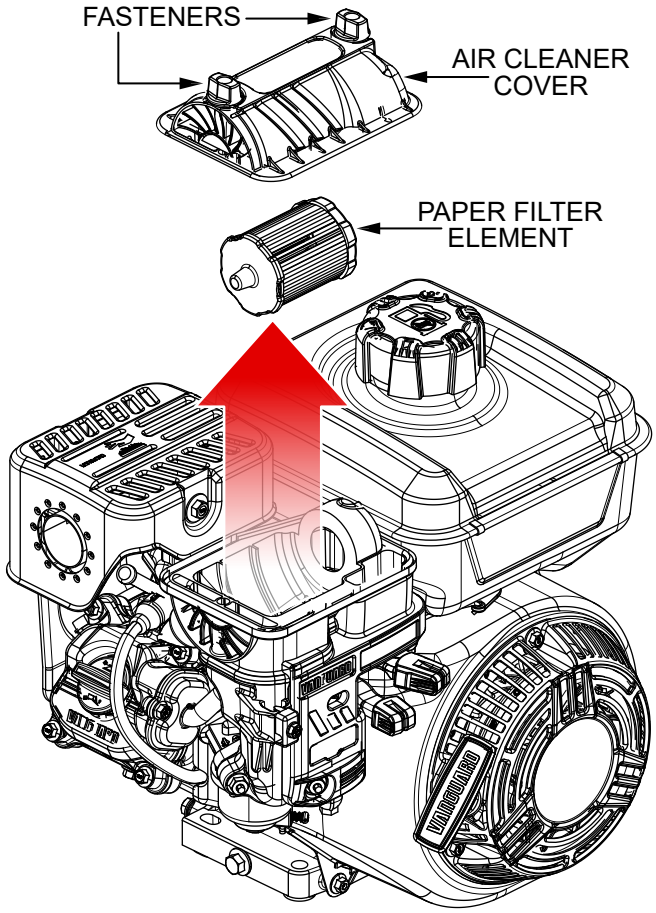

Figure 58. Engine Air Cleaner Components

1. Loosen the fasteners and remove the air cleaner cover and paper filter element.
2. To remove dirt, gently tap the paper filter element several times on a hard surface. Replace the paper filter element if it is excessively dirty.

NOTICE

DO NOT use pressurized air or solvents to clean the air filter. Pressurized air can damage the filter and solvents will dissolve the filter.

3. Reinstall the paper air filter and the air cleaner cover. Secure the cover with the fasteners and make sure the fasteners are tight.

NOTICE

Operating the engine with loose or damaged air cleaner components can allow unfiltered air into the engine, causing premature wear and failure.

Engine Oil

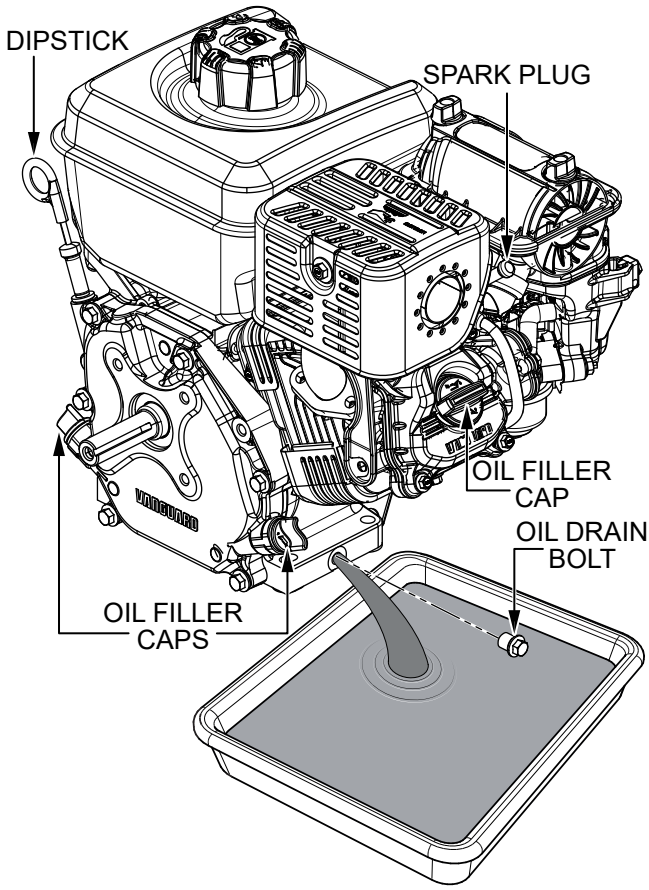

Figure 59. Draining Engine Oil

NOTICE

ALWAYS drain the engine oil while the oil is **warm**.

1. With the engine **OFF** but still warm, disconnect the spark plug wire and keep it away from the spark plug (Figure 59).
2. Remove the engine oil dipstick (Figure 59).
3. Remove one of the oil drain bolts (Figure 59) and allow the engine oil to drain into a suitable container.
4. After the oil has drained, reinstall and tighten the oil drain bolt.
5. Remove one of the oil filler caps (Figure 59) and fill with the recommended oil type listed in Table 5. For engine oil capacity, see Table 2. **DO NOT** overfill.
6. After adding oil, wait one minute and then check the oil level.
7. Reinstall the oil filler cap and the dipstick and reconnect the spark plug wire to the spark plug.

Spark Plug

1. Remove the spark plug (Figure 60) and clean it with a wire brush if it is to be reused. Replace the spark plug if the insulator is cracked or chipped.

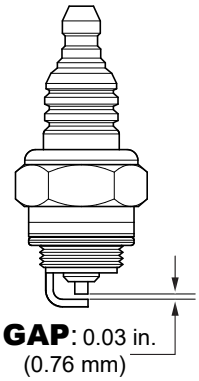

Figure 60. Spark Plug

2. Using a feeler gauge, adjust the spark plug gap (Figure 60). The gap should measure 0.03 inch (0.76 mm).
3. To prevent cross-threading, thread the spark plug into the cylinder hole first by hand, then torque to 180 lbf·in (20 Nm).

V-Belt

1. Inspect the V-belt (Figure 61) to determine if it is frayed, peeling, full of tiny cracks, has pieces of rubber missing, or is otherwise damaged.

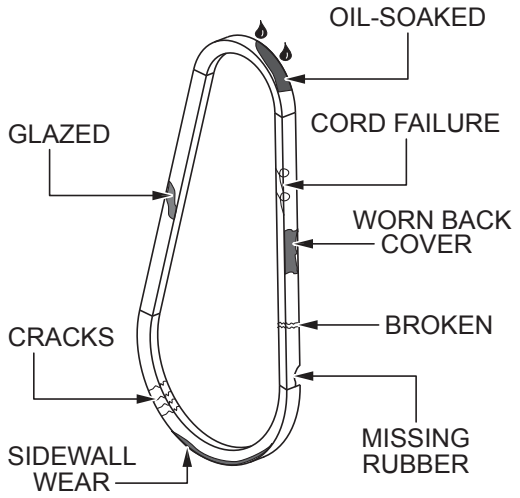

Figure 61. V-Belt Inspection

2. Inspect the V-belt (Figure 61) to determine if it is oil-soaked or *glazed* (a hard, shiny appearance on the sides of the belt). Either of these conditions can cause overheating of the belt, which can weaken the belt and increase the possibility of it breaking.
3. Replace the V-belt immediately if any of the above wear conditions are observed.

Spark Arrester

1. Remove the spark plug wire from the spark plug terminal. Secure the spark plug wire to prevent contact with the spark plug terminal.

NOTICE

Note the orientation of the muffler deflector before removal.

2. Remove and retain the three M4 hex flange screws securing the muffler deflector and spark arrester to the muffler guard (Figure 62).

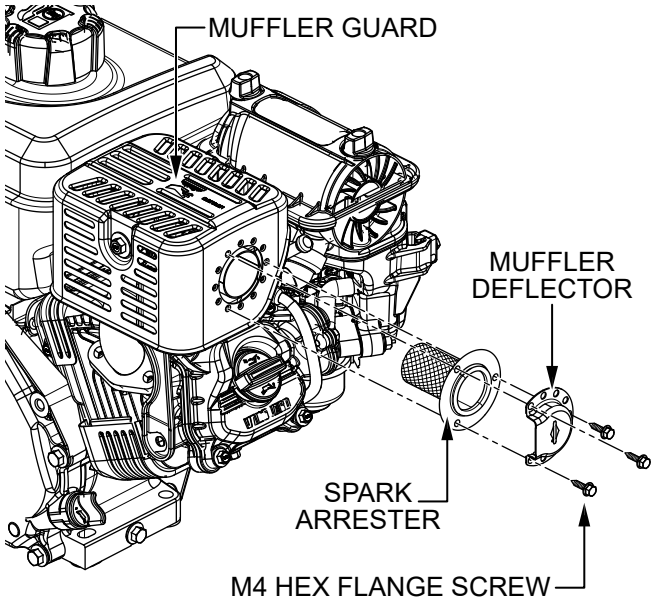

Figure 62. Spark Arrester Removal

3. Clean the spark arrester screen with a stiff bristle brush (Figure 63). If carbon buildup is present, soak or spray the spark arrester screen with carburetor cleaner and blow dry from the inside out with low-pressure compressed air.

NOTICE

Be careful to avoid bending or puncturing the spark arrester screen.

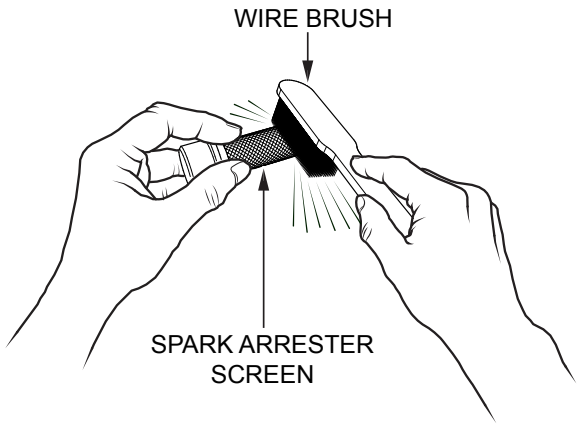

Figure 63. Cleaning The Spark Arrester

4. Replace the spark arrester if the screen cannot be adequately cleaned or if any damage is observed.
5. Secure the spark arrester and muffler deflector to the muffler guard using the three M4 hex flange screws that were removed in step #2.

TROWEL MAINTENANCE

Clean the trowel daily. Remove all dust and slurry buildup. Make sure lubrication is performed after any steam cleaning.

Trowel Lubrication (Every 8 Hours)

Regular lubrication is required to maintain your trowel in optimal working condition. Perform the following lubrication procedure after **every 8 hours of use**.

1. Locate one of the Zerk grease fittings on the spider assembly (Figure 64). Remove the Zerk fitting cap and set it aside.

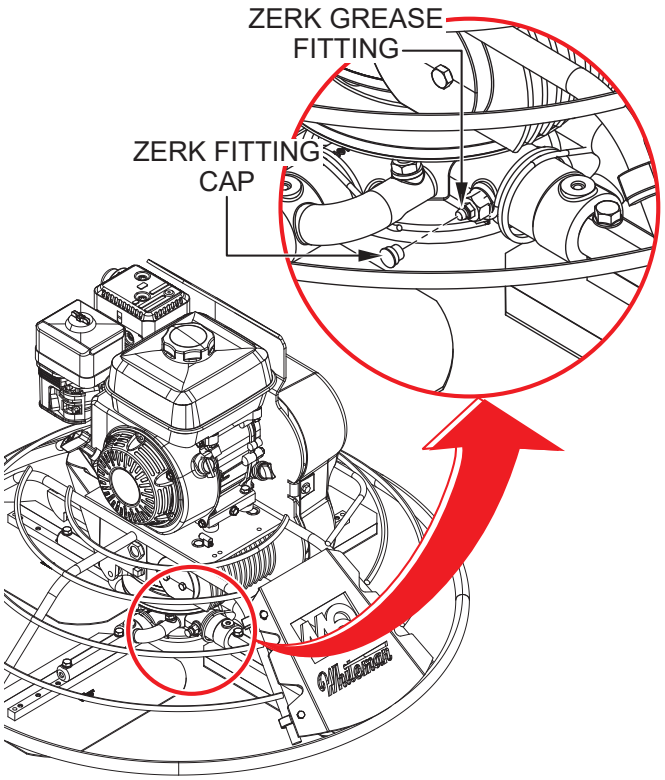

Figure 64. Spider Lubrication

2. Wipe the Zerk grease fitting clean to prevent abrasive material from entering the fitting during lubrication.
3. Lubricate the Zerk grease fitting with 1–1½ shots of multipurpose grade grease. **DO NOT** overgrease. Replace the Zerk fitting cap when finished.
4. Repeat steps 1–3 for the remaining grease fittings on the spider assembly.

Blade Pitch Adjustment

Perform maintenance adjustment of blade pitch using a bolt on the trowel arm lever (Figure 65). This bolt is the contact point of the trowel arm with the lower wear plate on the thrust collar. The goal of adjustment is consistent blade pitch and finishing quality.

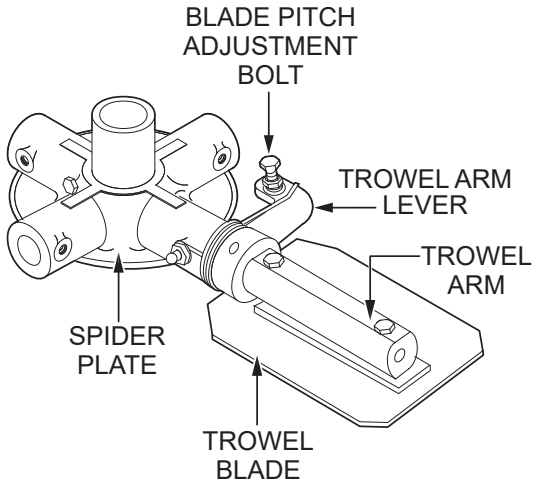

Figure 65. Blade Pitch Adjustment Bolt

Look for the following indications when determining if blade pitch adjustment is necessary:

- Are blades wearing out unevenly (e.g. one blade is completely worn out while the others look new)?
- Does the machine have a perceptible rolling or bouncing motion while in use?
- Does the guard ring rock up and down while the machine is in use?

Once it has been determined that blade pitch adjustment is required, do the following:

1. Place the trowel on a flat, level surface with blocks under the main guard ring for support. Any uneven spots in the floor or debris under the trowel blades will cause an incorrect perception of adjustment. Ideally, a 5 ft. × 5 ft. (1.5 m × 1.5 m), 3/4 inch-thick, **flat** steel plate should be used.
2. Pitch the blades as flat as possible (Figure 66). The pitch adjustment bolts should barely contact (0.10 inch maximum clearance) the lower wear plate. All adjustment bolts should be spaced the same distance from the lower wear plate. If any one of the bolts does not make contact, adjustment is necessary.

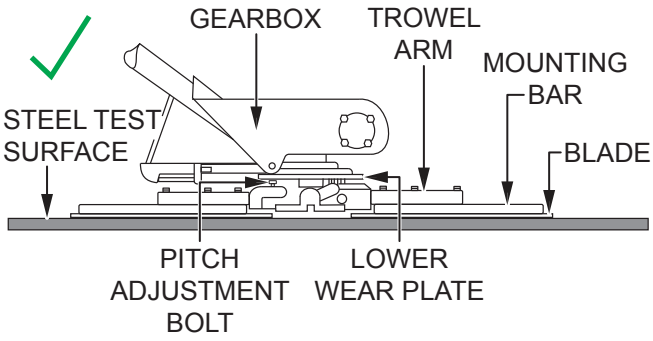

Figure 66. Blades Pitched Flat (Correct)

3. Adjust the **'high'** bolts **down** to the level of the bolt that is not touching, ***or*** adjust the **'low'** bolt **up** to the level of the higher ones. Whenever possible, adjust the **'low'** bolt **up** to the level of the rest of the bolts. This is the fastest method, but it may not always work. After adjustment, verify that the blades pitch correctly.

NOTICE

Incorrectly adjusted blades will often be unable to pitch flat. This can occur if the adjustment bolts are raised too high. Conversely, adjustment bolts that are too low will prevent the blades from being pitched high enough for finishing operations.

4. If the trowel still finishes poorly after blade pitch adjustment has been performed, blades, trowel arms, and trowel arm bushings should be inspected for improper adjustment, wear, or damage.

Figure 67 illustrates incorrect spider plate alignment due to improper adjustment, worn spider bushings, or bent trowel arms.

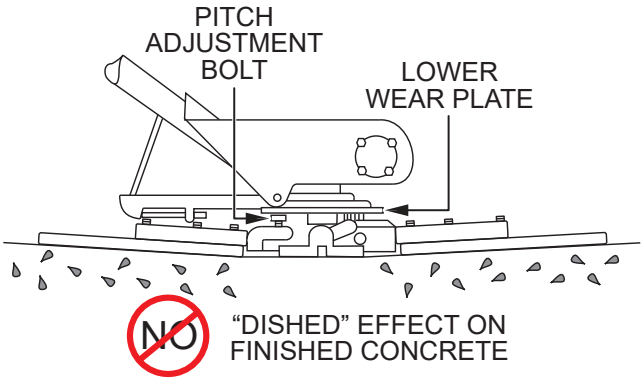

Figure 67. Blades Pitched Flat (Incorrect)

Spider Removal

Refer to Figure 68.

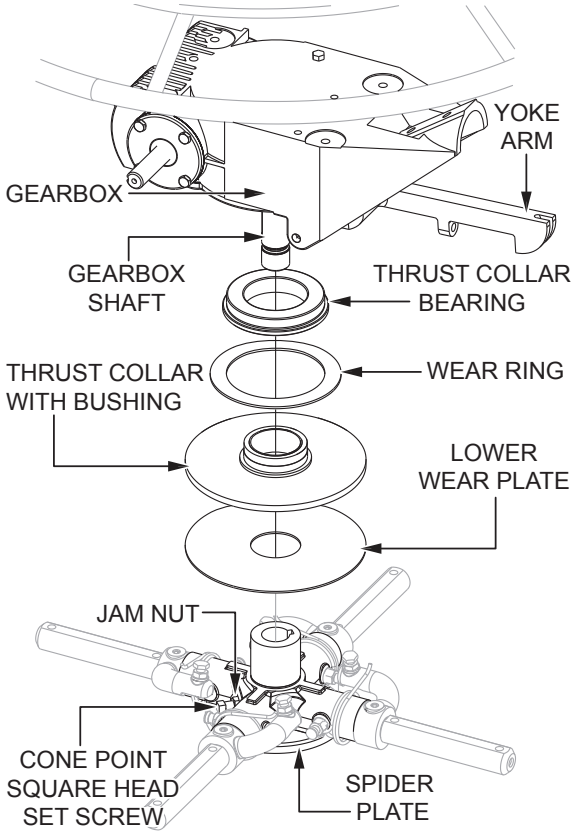

Figure 68. Spider Removal

1. Locate and loosen the cone point square head set screw and attached jam nut on the side of the spider assembly.
2. Carefully lift the upper trowel/gearbox assembly off of the spider assembly. A light tap with a rubber mallet may be necessary to dislodge the spider from the main shaft of the gearbox.

Blade Replacement

It is recommended to replace **all** of the trowel blades at the same time. If only one or some of the blades are changed, the machine may wobble or bounce and will not finish concrete consistently.

NOTICE

Please note the orientation of each blade on the trowel arm before removing.

1. Place the trowel on a flat, level surface with blocks under the main guard ring for support.
2. Remove the bolts and lock washers from each of the trowel arms, then remove the blades as shown in Figure 69.

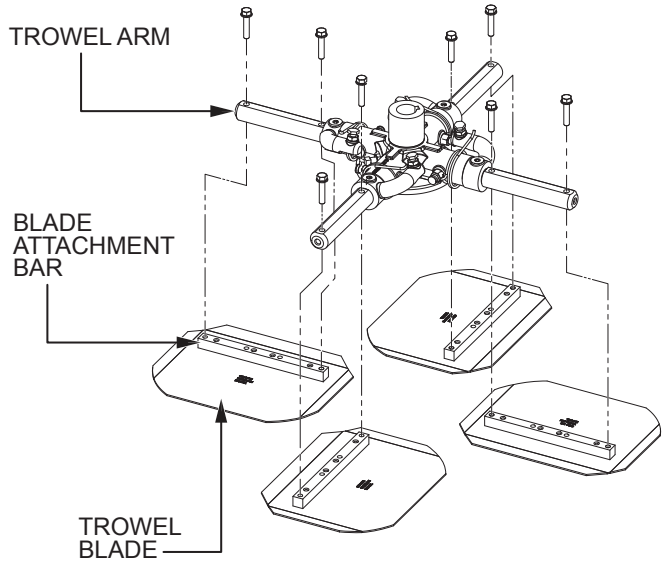

Figure 69. Blade Removal

3. Wire brush and remove all concrete and debris from all six sides of each of the four trowel arms. This is important to properly seat the new blades.
4. Install the new blades, maintaining the proper blade orientation as noted during removal. Secure with the bolts and washers that were removed earlier.

Trowel Arm Removal

Refer to Figure 70.

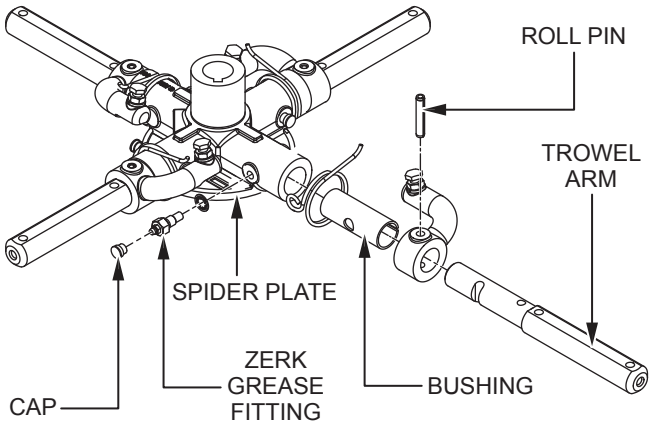

Figure 70. Trowel Arm Removal

1. Each trowel arm is held in place at the spider plate by a Zerk grease fitting (hex head bolt) and a roll pin. Remove the Zerk grease fitting and the roll pin from the spider plate.
2. Remove the trowel arm from the spider plate.
3. Carefully remove the trowel arm bushing and set it aside.
4. Examine the trowel arm bushing, and clean it if necessary. Replace the bushing if it is worn or out-of-round.

Trowel Arm Inspection

Trowel arms (Figure 71) can be damaged by rough handling such as dropping the trowel, or by striking exposed plumbing, rebar or other objects while in operation. A bent trowel arm will prevent smooth, fluid rotation of the blades. If bent trowel arms are suspected, examine them for straightness as shown below.

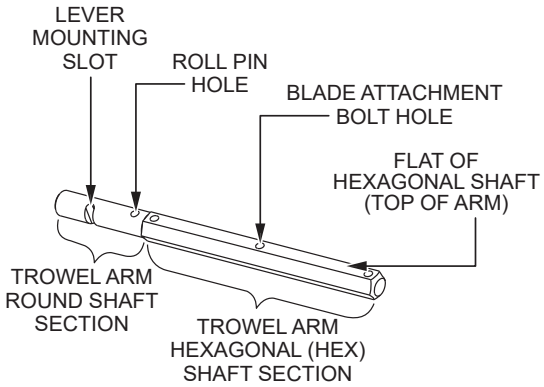

Figure 71. Trowel Arm

1. Place the trowel arm on a thick, steel plate, granite slab, or any other surface which is **true** and **flat** (Figure 72).

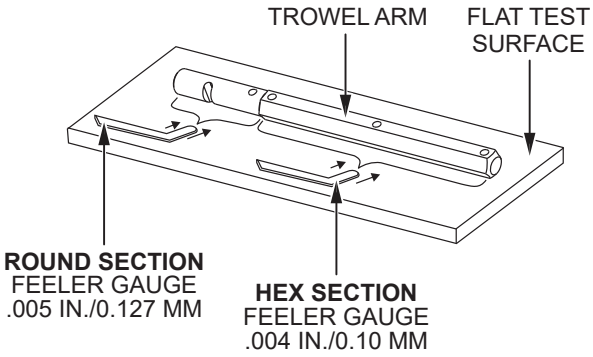

Figure 72. Trowel Arm Inspection

2. Check each of the six sides of the trowel arm hex section (Figure 72). A feeler gauge of 0.004 inch (0.10 mm) should not pass between the flat of the trowel arm and the test surface along its length on the test surface.

3. As the flat hex section rests on the test surface, use a feeler gauge of 0.005 inch (0.127 mm) to check the clearance between the round shaft section and the test surface. Rotate the arm to each of the flat hex sections and check the clearance between the round shaft and the test surface. The clearance between the round shaft and the test surface should be identical for each hex section. See Figure 72.

4. Replace any bent or uneven trowel arms.

Trowel Arm Adjustment

The easiest and most consistent way to adjust a trowel arm is with the trowel arm adjustment tool (P/N 1817).

Once locked into the adjustment tool, each trowel arm bolt is adjusted until it contacts a stop on the fixture. This will consistently adjust all of the trowel arms, keeping the finisher as flat and evenly pitched as possible.

The trowel arm adjustment tool comes with usage instructions and all the hardware necessary to correctly perform this adjustment.

Perform the following procedure to adjust trowel arms using the trowel arm adjustment tool.

1. Unscrew the locking bolts on the adjustment tool and place a trowel arm (with lever attached) into the fixture channel as shown in Figure 73.

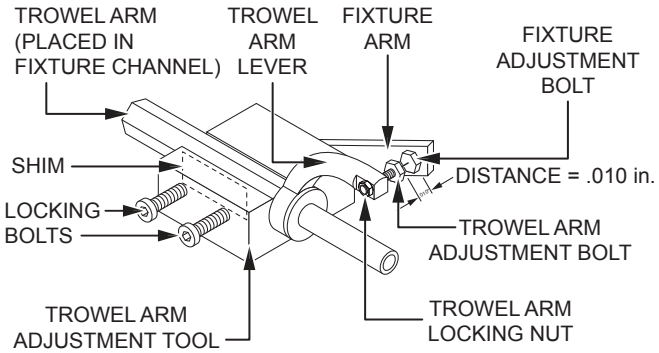

Figure 73. Trowel Arm Adjustment

2. Make sure the fixture arm is in the **UP** position (Figure 74).

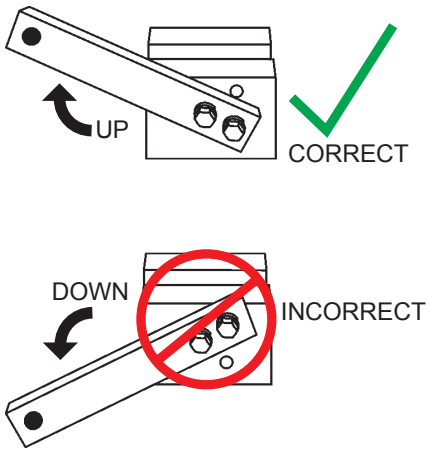

Figure 74. Fixture Arm Position (UP)

3. A thin shim (Figure 73) may be required to cover the blade holes on the trowel arm. Be sure to align the trowel arm adjustment bolt with the fixture adjustment bolt.
4. Tighten the locking bolts (Figure 73) to secure the trowel arm in place.
5. Adjust the bolt distance shown in Figure 73 to match one of the arms. The other arms will be adjusted to match this distance.
6. Loosen the locking nut on the trowel arm lever, then turn the trowel arm adjusting bolt until it barely touches (0.010 inch) the fixture adjustment bolt.
7. Once the correct adjustment is made, tighten the lock nut on the trowel arm to lock it in place.
8. Loosen the locking nuts on the adjustment tool, and remove the trowel arm.
9. Repeat steps 1–8 for the remaining trowel arms.

REASSEMBLY

1. Clean the wear plates and thrust collar, and examine the entire spider assembly. Use a wire brush to remove any concrete or rust buildup. Replace any spider components that are damaged or out-of-round.
2. Inspect the bronze trowel arm bushing and clean it if necessary. Replace the bushing if it is damaged, worn or out-of-round.
3. Reinstall the trowel arm bushing onto the trowel arm.
4. Repeat steps 2–3 for each trowel arm.
5. Make sure the spring tensioner is in the correct position to exert tension on the trowel arm.
6. Insert all trowel arms with levers (and bronze bushings already installed) into the spider plate. Align the grease holes on the bushings with the grease hole fittings on the spider plate.
7. Lock the trowel arms in place by tightening the Zerk grease fitting hex head bolts and jam nuts.
8. Reinstall the blades onto the trowel arms.
9. Install the stabilizer ring onto the spider assembly.
10. Reinstall the lower wear plate, thrust collar, and wear ring onto the spider shaft in the reverse order of disassembly. **Make sure there is little or no lateral movement** between the thrust collar and the spider shaft.
11. Carefully lift the upper trowel/gearbox assembly, align it with the keyway on the spider shaft, and insert it into the spider assembly.
12. Reinstall the cone point square head set screw and jam nut and tighten securely. Make sure the point of the set screw engages the groove in the gearbox main shaft.
13. Lubricate all grease points (Zerk fittings) with premium Lithum 12-based grease, conforming to NLG1 grade #2 consistency.

LONG-TERM STORAGE

Perform the following procedure when storing the trowel for more than 30 days.

- Drain the fuel tank completely, or add fuel stabilizer to the fuel.
- Run the engine until all gasoline in the carburetor has been completely consumed.
- Completely drain the oil from the crankcase and refill with fresh oil.
- Remove the spark plug. Pour 5–10 cc of SAE 30 oil into the cylinder. Turn the engine ON/OFF switch to the **ON** position for a few seconds to distribute the oil. Return the engine ON/OFF switch to the **OFF** position, and reinstall the spark plug.
- Clean off all external trowel components with a cloth.
- Cover the trowel and store it away from direct sunlight in a clean, dry location.

Troubleshooting (Engine)		
Symptom	**Possible Problem**	**Solution**
Difficult to start, fuel is available, but no spark at spark plug.	Spark plug bridging?	Check gap, insulation or replace spark plug.
	Carbon deposit on spark plug?	Clean or replace spark plug.
	Short circuit due to deficient spark plug insulation?	Check spark plug insulation, replace if worn.
	Improper spark plug gap?	Set to proper gap.
	Spark plug is red?	Check transistor ignition unit.
	Spark plug is bluish white?	If insufficient compression, repair or replace engine. If injected air leaking, correct leak. If carburetor jets clogged, clean carburetor.
	No spark present at tip of spark plug?	Check if transistor ignition unit is broken, and replace defective unit. Check if voltage cord cracked or broken and replace. Check if spark plug is fouled and replace.
	No oil?	Add oil as required.
	Oil pressure alarm lamp blinks upon starting? (if applicable)	Check automatic shutdown circuit, oil sensor. (if applicable)
Difficult to start, fuel is available, and spark is present at the spark plug.	ON/OFF switch is shorted?	Check switch wiring, replace switch.
	Ignition coil defective?	Replace ignition coil.
	Improper spark gap, points dirty?	Set correct spark gap and clean points.
	Condenser insulation worn or short circuiting?	Replace condenser.
	Spark plug wire broken or short circuiting?	Replace defective spark plug wiring.
Difficult to start, fuel is available, spark is present and compression is normal.	Wrong fuel type?	Flush fuel system, replace with correct type of fuel.
	Water or dust in fuel system?	Flush fuel system.
	Air cleaner dirty?	Clean or replace air cleaner.
	Choke open?	Close choke.
Difficult to start, fuel is available, spark is present and compression is low.	Suction/exhaust valve stuck or protruded?	Reseat valves.
	Piston ring and/or cylinder worn?	Replace piston rings and/or piston.
	Cylinder head and/or spark plug not tightened properly?	Torque cylinder head bolts and spark plug.
	Head gasket and/or spark plug gasket damaged?	Replace head and spark plug gaskets.
No fuel present at carburetor.	No fuel in fuel tank?	Fill with correct type of fuel.
	Fuel cock does not open properly?	Apply lubricant to loosen fuel cock lever, replace if necessary.
	Fuel filter/lines clogged?	Replace fuel filter.
	Fuel tank cap breather hole clogged?	Clean or replace fuel tank cap.
	Air in fuel line?	Bleed fuel line.

Troubleshooting (Engine) - continued		
Symptom	**Possible Problem**	**Solution**
Weak in power, compression is proper and does not misfire.	Air cleaner dirty?	Clean or replace air cleaner.
	Improper level in carburetor?	Check float adjustment, rebuild carburetor.
	Defective spark plug?	Clean or replace spark plug.
	Improper spark plug?	Set to proper gap.
Weak in power, compression is proper but misfires.	Water in fuel system?	Flush fuel system and replace with correct type of fuel.
	Dirty spark plug?	Clean or replace spark plug.
	Ignition coil defective?	Replace ignition coil.
Engine overheats.	Wrong type of fuel?	Replace with correct type of fuel.
	Cooling fins dirty?	Clean cooling fins.
	Intake air restricted?	Clear intake of dirt and debris. Replace air cleaner elements as necessary.
	Oil level too low or too high?	Adjust oil to proper level.
Rotational speed fluctuates.	Governor adjusted incorrectly?	Adjust governor.
	Governor spring defective?	Replace governor spring.
	Fuel flow restricted?	Check entire fuel system for leaks or clogs.
Recoil starter malfunctions. (if applicable)	Recoil mechanism clogged with dust and dirt?	Clean recoil assembly with soap and water.
	Spiral spring loose?	Replace spiral spring.
Starter malfunctions.	Loose, damaged wiring?	Ensure tight, clean connections on battery and starter.
	Battery insufficiently charged?	Recharge or replace battery.
	Starter damaged or internally shorted?	Replace starter.
Burns too much fuel.	Over-accumulation of exhaust products?	Check and clean valves. Check muffler and replace if necessary.
	Wrong spark plug?	Replace spark plug with manufacturer's suggested type.
Exhaust color is continuously white.	Lubricating oil is wrong viscosity?	Replace lubricating oil with correct viscosity.
	Worn rings?	Replace rings.
Exhaust color is continuously black.	Air cleaner clogged?	Clean or replace air cleaner.
	Choke valve set to incorrect position?	Adjust choke valve to correct position.
	Carburetor defective, seal on carburetor broken?	Replace carburetor or seal.
	Poor carburetor adjustment, engine runs too rich?	Adjust carburetor.
Will not start, no power with key ON. (if applicable)	ON/OFF device not activated ON?	Turn on ON/OFF device.
	Battery disconnected or discharged?	Check cable connections. Charge or replace battery.
	Ignition switch/wiring defective?	Replace ignition switch. Check wiring.

Troubleshooting (Walk-Behind Trowel)		
Symptom	**Possible Problem**	**Solution**
Engine running rough or not at all.	Engine ON/OFF switch in OFF position or malfunctioning?	Make sure that the Engine ON/OFF switch is ON or replace switch if necessary.
	Centrifugal ON/OFF switch in OFF position or malfunctioning?	Place centrifugal stop switch in ON position. Check wiring. Replace switch if necessary.
	Fuel?	Check the fuel system. Make sure there is fuel being supplied to the engine. Check to ensure that the fuel filter is not clogged.
	Ignition?	Check to ensure that the ignition switch has power and is functioning correctly.
	Loose wire connections	Check wiring. Replace or repair as necessary.
	Bad contacts in ON/OFF switch?	Replace ON/OFF switch.
Trowel bounces, rolls concrete, or makes uneven swirls in concrete.	Blades?	Make certain blades are in good condition, not excessively worn. Finish blades should measure no less than 2" (50 mm) from the blade bar to the trailing edge. Combo blades should measure no less than 3.5" (89 mm). Trailing edge of the blade should be straight and parallel to the blade bar.
	Pitch adjustment?	Check that all blades are set at the same pitch angle as measured at the spider. A field adjustment tool is available for height adjustment of the trowel arms. (Contact Parts Dept.)
	Bent trowel arms?	Check the spider assembly for bent trowel arms. If one of the arms is even slightly bent, replace it immediately.
	Spider?	Check fit of arms in spider. This can be done by moving the trowel arms up and down. If there is more than 1/8 inch (3.2 mm) of travel at the tip of the arm, the spider and arms should be replaced.
	Thrust collar?	Check the flatness of the thrust collar by rotating it on the spider. If it varies by more than 0.02 inch (0.5 mm) replace the thrust collar.
	Thrust collar bushing?	Check the thrust collar by rocking it on the spider. If it can tilt more than 3/32 inch (2.4 mm) as measured at the thrust collar O.D., replace the thrust collar.
	Thrust bearing worn?	Check the thrust bearing to see that it is spinning freely. Replace if necessary.

Troubleshooting (Walk-Behind Trowel) - continued		
Symptom	**Possible Problem**	**Solution**
Machine has a perceptible rolling motion while running.	Main shaft?	The main output shaft of the gearbox assembly should be checked for straightness. The main shaft must run straight and cannot be more than 0.003" (0.08 mm) out of round at the spider attachment point.
	Yoke?	Check to make sure that both fingers of the yoke press evenly on the wear cap. Replace yoke as necessary.
	Blade Pitch?	Check to ensure that each blade is adjusted to have the same pitch as all other blades. Adjust per maintenance section in manual.
Clutch slipping or sluggish response to engine speed change.	Worn V-belts?	Replace V-belt.
	Hand clutch out of adjustment?	Adjust per instructions in maintenance section of this manual.
	Worn or defective hand clutch parts?	Replace parts as necessary.
	Worn bearings in gearbox?	Rotate input shaft by hand. If shaft rotates with difficulty, check the input and output shaft bearings. Replace as necessary.
	Worn or broken gears in gearbox?	Verify that the gearbox shaft rotates when the input shaft is rotated. Replace both the worm and worm gear as a set.
Trowel blades do not rotate.	Defective clutch?	Replace clutch.
	Broken V-belt?	Replace V-belt.
	Defective ON/OFF switch?	Check and replace ON/OFF switch if necessary.
	Defective centrifugal ON/OFF switch?	Check and replace centrifugal ON/OFF switch if necessary.

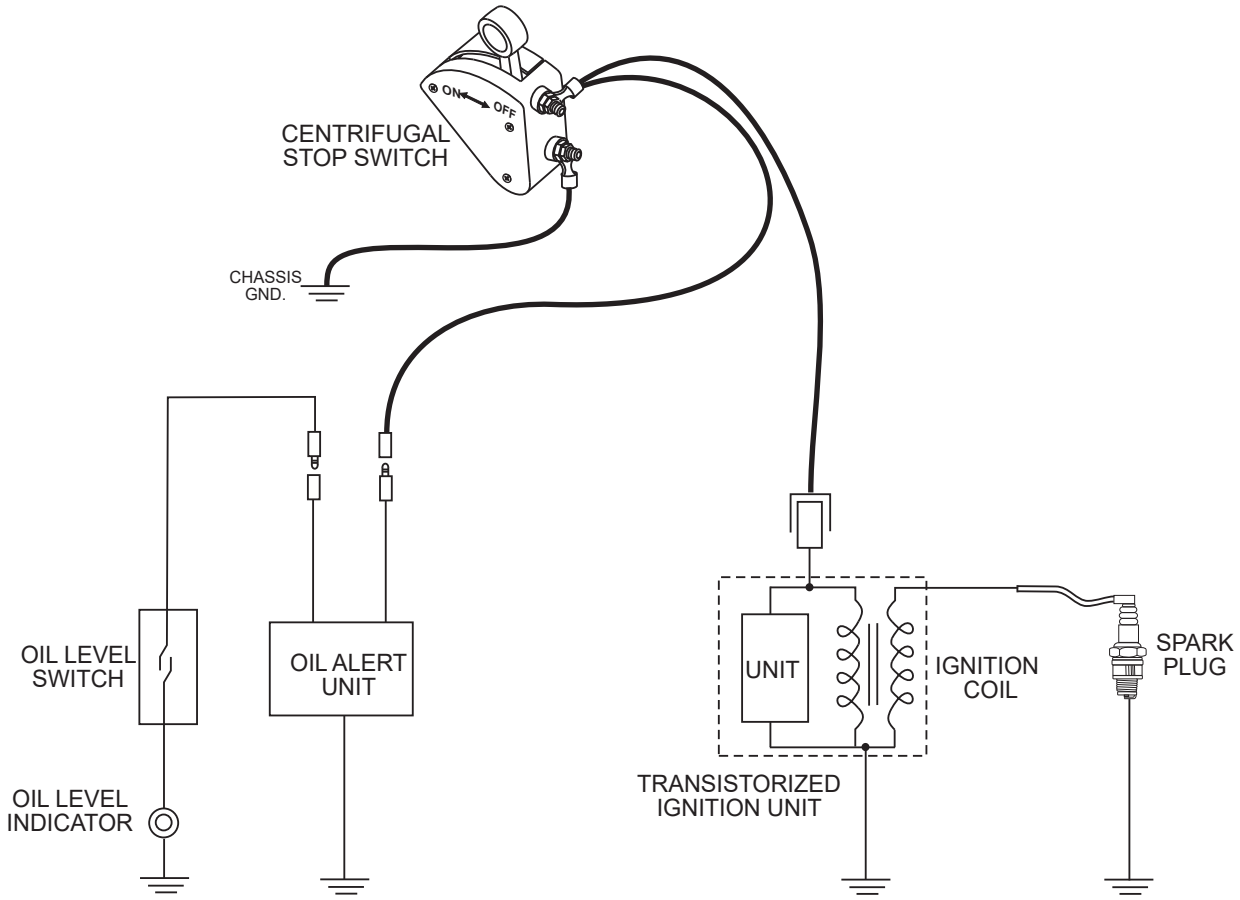
ON
OFF
CENTRIFUGAL
STOP SWITCH
CHASSIS
GND.
OIL LEVEL
SWITCH
OIL LEVEL
INDICATOR
OIL ALERT
UNIT
UNIT
IGNITION
COIL
SPARK
PLUG
TRANSISTORIZED
IGNITION UNIT

OPERATION MANUAL

HERE'S HOW TO GET HELP

PLEASE HAVE THE MODEL AND SERIAL NUMBER ON-HAND WHEN CALLING

UNITED STATES

Multiquip Inc.

(310) 537- 3700
6141 Katella Avenue Suite 200
Cypress, CA 90630
E-MAIL: mq@multiquip.com
WEBSITE: www.multiquip.com

CANADA

Multiquip

(450) 625-2244
4110 Industriel Boul.
Laval, Quebec, Canada H7L 6V3
E-MAIL: infocanada@multiquip.com

UNITED KINGDOM

Multiquip (UK) Limited Head Office

0161 339 2223
Unit 2, Northpoint Industrial Estate, Globe Lane,
Dukinfield, Cheshire SK16 4UJ
E-MAIL: sales@multiquip.co.uk

© COPYRIGHT 2025, MULTIQUIP INC.

Multiquip Inc. and the MQ logo are registered trademarks of Multiquip Inc. and may not be used, reproduced, or altered without written permission. All other trademarks are the property of their respective owners and used with permission.

This manual MUST accompany the equipment at all times. This manual is considered a permanent part of the equipment and should remain with the unit if resold.

The information and specifications included in this publication were in effect at the time of approval for printing. Illustrations, descriptions, references and technical data contained in this manual are for guidance only and may not be considered as binding. Multiquip Inc. reserves the right to discontinue or change specifications, design or the information published in this publication at any time without notice and without incurring any obligations.

MULTIQUIP®

PN: 48237