OPERATION AND PARTS MANUAL

MULTIQUIP®

ESSICK SERIES
MODEL EM120 HYDRAULIC
PLASTER/MORTAR MIXER
(HONDA GX390U1QA2 GASOLINE ENGINE)

Revision #1 (09/09/19)

To find the latest revision of this publication, visit our website at:
www.multiquip.com

THIS MANUAL MUST ACCOMPANY THE EQUIPMENT AT ALL TIMES.


WARNING
CANCER &
REPRODUCTIVE HARM
www.P65Warnings.ca.gov
P/N 38707

⚠ WARNING



SILICOSIS WARNING

Grinding/cutting/drilling of masonry, concrete, metal and other materials with silica in their composition may give off dust or mists containing crystalline silica. Silica is a basic component of sand, quartz, brick clay, granite and numerous other minerals and rocks. Repeated and/or substantial inhalation of airborne crystalline silica can cause serious or fatal respiratory diseases, including silicosis. In addition, California and some other authorities have listed respirable crystalline silica as a substance known to cause cancer. When cutting such materials, always follow the respiratory precautions mentioned above.

⚠ WARNING



RESPIRATORY HAZARDS

Grinding/cutting/drilling of masonry, concrete, metal and other materials can generate dust, mists and fumes containing chemicals known to cause serious or fatal injury or illness, such as respiratory disease, cancer, birth defects or other reproductive harm. If you are unfamiliar with the risks associated with the particular process and/or material being cut or the composition of the tool being used, review the material safety data sheet and/or consult your employer, the material manufacturer/supplier, governmental agencies such as OSHA and NIOSH and other sources on hazardous materials. California and some other authorities, for instance, have published lists of substances known to cause cancer, reproductive toxicity, or other harmful effects.

Control dust, mist and fumes at the source where possible. In this regard use good work practices and follow the recommendations of the manufacturers or suppliers, OSHA/NIOSH, and occupational and trade associations. Water should be used for dust suppression when wet cutting is feasible. When the hazards from inhalation of dust, mists and fumes cannot be eliminated, the operator and any bystanders should always wear a respirator approved by NIOSH/MSHA for the materials being used.

EM120 Hydraulic Plaster/Mortar Mixer

Proposition 65 Warning 2
Silicosis/Respiratory Warnings 3
Table of Contents 4
Training Checklist 5–11
Dimensions/Specifications 12
Engine Specifications 13
General Information 14
Basic Components (Mixer) 15
Basic Components (Hydraulic) 16
Engine Components 17
Towing Guidelines 18
Safety Chain Connection 19
Inspection 20–22
Start-Up 23
Start-Up/Operation 24
Operation 25
Maintenance (Engine) 26–28
Maintenance (Mixer) 29–33
Hydraulic System Diagram 34
Troubleshooting (Mixer) 35
Troubleshooting (Engine) 36–37
Explanation of Code in Remarks Column 38
Suggested Spare Parts 39

Component Drawings

Nameplate and Decals Assembly 40–41
Paddle Blades Assembly 42–43
Drum and Shaft Assembly 44–45
Paddle Shaft Assembly 46–47
Hydraulic Assembly 48–49
Frame Assembly 50–51
Cabinet Assembly 52–53
Engine Assembly 54–55
Engine Service Parts 56–57

NOTICE

Specifications and part numbers are subject to change without notice.

Training Checklist			
No,	**Description**	**OK?**	**Date**
1	Read operation manual completely.		
2	Machine layout, location of components, checking of engine oil levels.		
3	Fuel system, refueling procedure.		
4	Operation of controls (machine not running).		
5	Safety controls, safety stop switch operation.		
6	Emergency stop procedures.		
7	Machine transport and storage.		

Do not operate or service the equipment before reading the entire manual. Safety precautions should be followed at all times when operating this equipment. Failure to read and understand the safety messages and operating instructions could result in injury to yourself and others.



SAFETY MESSAGES

The four safety messages shown below will inform you about potential hazards that could injure you or others. The safety messages specifically address the level of exposure to the operator and are preceded by one of four words: **DANGER, WARNING, CAUTION** or **NOTICE.**

SAFETY SYMBOLS

DANGER

Indicates a hazardous situation which, if not avoided, **WILL** result in **DEATH** or **SERIOUS INJURY.**

WARNING

Indicates a hazardous situation which, if not avoided, **COULD** result in **DEATH** or **SERIOUS INJURY.**

CAUTION

Indicates a hazardous situation which, if not avoided, **COULD** result in **MINOR** or **MODERATE INJURY.**

NOTICE

Addresses practices not related to personal injury.

Potential hazards associated with the operation of this equipment will be referenced with hazard symbols which may appear throughout this manual in conjunction with safety messages.

Symbol	Safety Hazard
	Lethal exhaust gas hazards
	Explosive fuel hazards
	Burn hazards
	Rotating parts hazards
	Hydraulic fluid hazards

GENERAL SAFETY

⚠ CAUTION

- **NEVER** operate this equipment without proper protective clothing, shatterproof glasses, respiratory protection, hearing protection, steel-toed boots and other protective devices required by the job or city and state regulations.



- Avoid wearing jewelry or loose fitting clothes that may snag on the controls or moving parts as this can cause serious injury.
- **NEVER** operate this equipment when not feeling well due to fatigue, illness or when under medication.



- **NEVER** operate this equipment under the influence of drugs or alcohol.



- **ALWAYS** clear the work area of any debris, tools, etc. that would constitute a hazard while the equipment is in operation.
- **ALWAYS** check the equipment for loosened threads or bolts before starting.
- **DO NOT** use the equipment for any purpose other than its intended purposes or applications.

NOTICE

- This equipment should only be operated by trained and qualified personnel 18 years of age and older.
- Whenever necessary, replace nameplate, operation and safety decals when they become difficult read.
- Manufacturer does not assume responsibility for any accident due to equipment modifications. Unauthorized equipment modification will void all warranties.
- **NEVER** use accessories or attachments that are not recommended by Multiquip for this equipment. Damage to the equipment and/or injury to user may result.
- **ALWAYS** know the location of the nearest **fire extinguisher.**



- **ALWAYS** know the location of the nearest **first aid kit.**



- **ALWAYS** know the location of the nearest phone or **keep a phone on the job site.** Also, know the phone numbers of the nearest **ambulance, doctor** and **fire department.** This information will be invaluable in the case of an emergency.

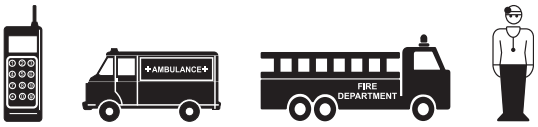

MIXER SAFETY

⚠ DANGER



- **NEVER** operate the equipment in an explosive atmosphere or near combustible materials. An explosion or fire could result causing severe **bodily harm or even death.**
- **DO NOT** mix **flammable** or **explosive** substances.

⚠ WARNING



- **NEVER** place your hands inside the drum while starting or operating this equipment.
- **NEVER** disconnect any **emergency or safety devices.** These devices are intended for operator safety. Disconnection of these devices can cause severe injury, bodily harm or even death. Disconnection of any of these devices will void all warranties.
- Before operating mixer, ensure that safety grate is in position and correctly fitted.



- **NEVER** use your hand to find hydraulic leaks. Use a piece of wood or cardboard. Hydraulic fluid injected into the skin must be treated by a knowledgeable physician immediately or severe injury or death can occur.

⚠ CAUTION

- **NEVER** lubricate components or attempt service on a running machine.

NOTICE

- **ALWAYS** keep the machine in proper running condition.
- **ALWAYS** ensure mixer is on level ground before mixing.
- Fix damage to machine and replace any broken parts immediately.
- **DO NOT** tip mixer onto drum mouth when the drum is rotating.
- Ensure the drum is rotating while filling and emptying the drum.
- **ALWAYS** store equipment properly when it is not being used. Equipment should be stored in a clean, dry location out of the reach of children and unauthorized personnel.

ENGINE SAFETY (GASOLINE MODELS ONLY)

⚠ DANGER

- Engine fuel exhaust gases contain poisonous carbon monoxide. This gas is colorless and odorless, and can cause death if inhaled.
- The engine of this equipment requires an adequate free flow of cooling air. **NEVER** operate this equipment in any enclosed or narrow area where free flow of the air is restricted. If the air flow is restricted it will cause injury to people and property and serious damage to the equipment or engine.

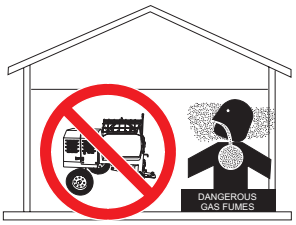

⚠ WARNING

- **DO NOT** place hands or fingers inside engine compartment when engine is running.
- **NEVER** operate the engine with heat shields or guards removed.



- Keep fingers, hands hair and clothing away from all moving parts to prevent injury.
- **DO NOT** remove the engine oil drain plug while the engine is hot. Hot oil will gush out of the oil tank and severely scald any persons in the general area of the mixer.

⚠ CAUTION



- **NEVER** touch the hot exhaust manifold, muffler or cylinder. Allow these parts to cool before servicing equipment.
- Make certain the operator knows how to and is capable of turning the engine OFF in case of an emergency.

NOTICE

- **NEVER** run engine without an air filter or with a dirty air filter. Severe engine damage may occur. Service air filter frequently to prevent engine malfunction.
- **NEVER** tamper with the factory settings of the engine or engine governor. Damage to the engine or equipment can result if operating in speed ranges above the maximum allowable.



FUEL SAFETY (GASOLINE MODELS ONLY)

⚠ DANGER

- **DO NOT** start the engine near spilled fuel or combustible fluids. Fuel is extremely flammable and its vapors can cause an explosion if ignited.
- **ALWAYS** refuel in a well-ventilated area, away from sparks and open flames.
- **ALWAYS** use extreme caution when working with **flammable** liquids.
- **DO NOT** fill the fuel tank while the engine is running or hot.
- **DO NOT** overfill tank, since spilled fuel could ignite if it comes into contact with hot engine parts or sparks from the ignition system.
- Store fuel in appropriate containers, in well-ventilated areas and away from sparks and flames.
- **NEVER** use fuel as a cleaning agent.
- **DO NOT** smoke around or near the equipment. Fire or explosion could result from fuel vapors or if fuel is spilled on a hot engine.



GENERATOR SAFETY (ELECTRIC MODELS ONLY)



If using a generator to power mixer, refer to applicable generator manual safety information section.

ELECTRIC MOTOR SAFETY (ELECTRIC MODELS ONLY)

NOTICE

- Operate electric motor only at the specified voltage indicated on the nameplate.
- **DO NOT** spray water onto electric motor.
- **ALWAYS** disconnect AC power plug from power source before moving mixer.
- **ALWAYS** make sure the ON/OFF switch on the electric motor is in the OFF position when not in use and before inserting the mixer's power plug into an AC receptacle.



Power Cord/Cable Safety

⚠ DANGER

- **NEVER** let power cords or cables **lay in water.**
- **NEVER** use **damaged** or **worn** cables or cords when connecting equipment to generator. Inspect for cuts in the insulation.
- **NEVER** grab or touch a live power cord or cable with wet hands. The possibility exists of **electrical shock, electrocution or death.**

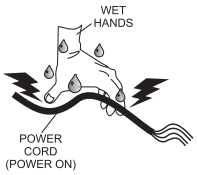

- Make sure power cables are securely connected. Incorrect connections may cause electrical shock and damage to the mixer.

⚠ CAUTION

- Ensure that cables and cords will not be tripped over or trapped underneath the mixer.

NOTICE

- **ALWAYS** make certain that proper power or extension cord has been selected for the job.

TRANSPORTING SAFETY

⚠ CAUTION

- **NEVER** allow any person or animal to stand underneath the equipment while lifting.

NOTICE

- **ALWAYS** make sure forklift forks are inserted into pockets (if applicable) as far as possible when lifting the mixer.
- **ALWAYS** shutdown engine before transporting.
- **NEVER** lift the equipment while the engine is running.
- Tighten fuel tank cap securely and close fuel cock to prevent fuel from spilling.
- **DO NOT** lift machine to unnecessary heights.
- **ALWAYS** tie down equipment during transport by securing the equipment with rope.
- **NEVER** tip the engine to extreme angles during lifting as it may cause oil to gravitate into the cylinder head, making the engine start difficult.

TOWING SAFETY

⚠ CAUTION

- Check with your local county or state safety towing regulations, in addition to meeting ***Department of Transportation (DOT) Safety Towing Regulations,*** before towing your mixer.
- In order to reduce the possibility of an accident while transporting the mixer on public roads, **ALWAYS** make sure the towing vehicle is mechanically sound and in good operating condition.
- **ALWAYS** shutdown engine before transporting.
- **ALWAYS** inspect the hitch and coupling for wear. **NEVER** tow a mixer with defective hitches, couplings, chains, etc.
- Check the tire air pressure on both towing vehicle and mixer ***Mixer tires should be inflated to 50 psi cold.*** Also check the tire tread wear on the vehicle and mixer.
- **ALWAYS** make sure the mixer is equipped with a **safety chain.**
- **ALWAYS** properly attach mixer's safety chains to towing vehicle.
- The maximum speed for highway towing is **55 MPH** unless posted otherwise. Recommended off-road towing is not to exceed **15 MPH** or less depending on type of terrain.
- Avoid sudden stops and starts. This can cause skidding, or jack-knifing. Smooth, gradual starts and stops will improve towing.
- Avoid sharp turns to prevent rolling.
- Mixer should be adjusted to a level position at all times when towing.
- Raise and lock mixer wheel stand in up position when towing.
- Place ***chock blocks*** underneath wheel to prevent **rolling** while parked.

ENVIRONMENTAL SAFETY/DECOMMISSIONING

NOTICE

Decommissioning is a controlled process used to safely retire a piece of equipment that is no longer serviceable. If the equipment poses an unacceptable and unrepairable safety risk due to wear or damage or is no longer cost effective to maintain (beyond life-cycle reliability) and is to be decommissioned (demolition and dismantlement),be sure to follow rules below.

- **DO NOT** pour waste or oil directly onto the ground, down a drain or into any water source.
- Contact your country's Department of Public Works or recycling agency in your area and arrange for proper disposal of any electrical components, waste or oil associated with this equipment.



- When the life cycle of this equipment is over, remove battery if equipped and bring to appropriate facility for lead reclamation. Use safety precautions when handling batteries that contain sulfuric acid.
- When the life cycle of this equipment is over, it is recommended that the mixer frame and all other metal parts be sent to a recycling center.

  Metal recycling involves the collection of metal from discarded products and its transformation into raw materials to use in manufacturing a new product.

  Recyclers and manufacturers alike promote the process of recycling metal. Using a metal recycling center promotes energy cost savings.

EMISSIONS INFORMATION

NOTICE

The gasoline engine used in this equipment has been designed to reduce harmful levels of carbon monoxide (CO), hydrocarbons (HC) and nitrogen oxides (NOx) contained in gasoline exhaust emissions.

This engine has been certified to meet US EPA Evaporative emissions requirements in the installed configuration.

Attempting to modify or make adjustments to the engine emmission system by unauthorized personnel without proper training could damage the equipment or create an unsafe condition.

Additionally, modifying the fuel system may adversely affect evaporative emissions, resulting in fines or other penalties.

Emission Control Label

The emission control label is an integral part of the emission system and is strictly controlled by regulation(s).

The label must remain with the engine for its entire life.

If a replacement emission label is needed, please contact your authorized engine distributor.

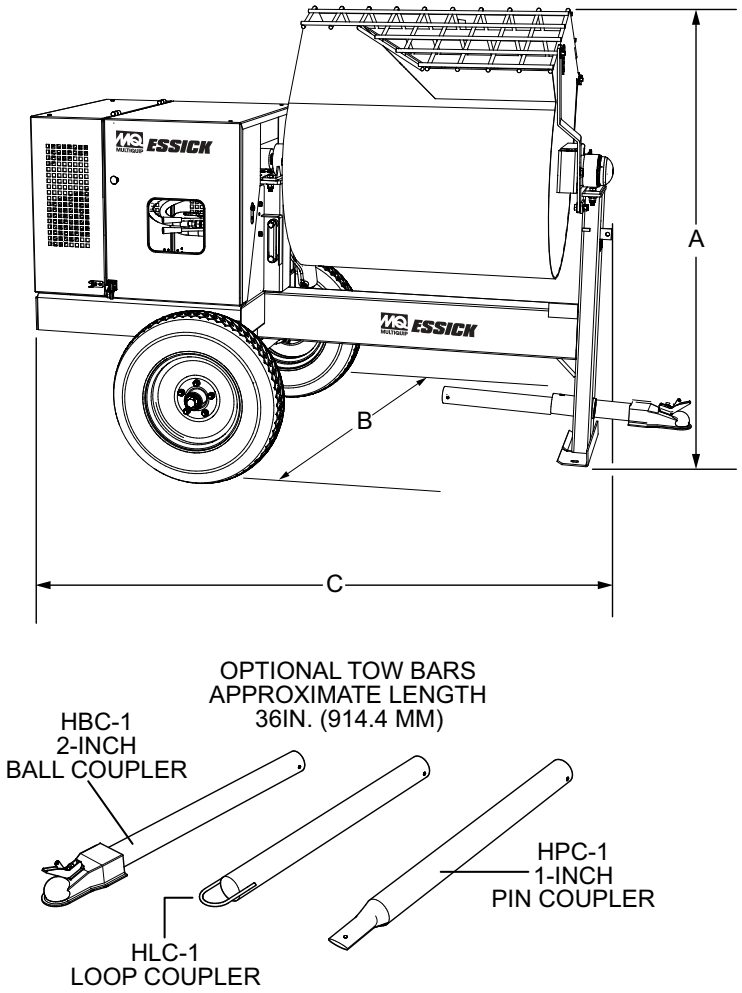

Figure 1. Dimensions

Table 1. EM120 Hyd. Concrete Mixer Dimensions/Specifications	
Reference Letter/Parameter	**Dimensions in. (mm)**
A (Height)	62.5 (1,587)
B (Width)	56 1,422)
C (Length)	82 in. (2,083)
Maximum Mixing Capacity	12 cu. ft. (339.8 liters)
Bag Capacity	3.5 ~ 4 bags
Hydraulic Oil Tank Capacity	12 gallons (45 liters)
Hydraulic Oil Type	Shell Tellius 68, Mobil DFE26 or Texaco Rand HDC
Weight	1,010 lbs. (554 Kg)

Table 3. EM120 Hyd. Noise and Vibration	
Guaranteed ISO 11201:2010 Based Sound Pressure Level at Operator Station in dB(A)	TBD
Guaranteed ISO 3744:2010 Based Sound Power Level in dB(A)	TBD

NOTES:

1. *Sound Pressure and Power Levels are "A" weighted Measures per ISO 226:2003 (ANSI S1.4-1981). They are measured with the operating condition of the machine which generates the most repeatable but highest values of the sound levels. Under normal circumstances, the sound level will vary depending on the condition of the material being worked upon.*
2. *The vibration level indicated is the vector sum of the RMS (Root Mean Square) Values of amplitudes on each axis, standardized to an 8 hour exposure period, and obtained using operating condition of the machine that generates the most repeatable but highest values in accordance with the applicable standards for the machine.*

Table 2. Engine Specifications/Dimensions	
Model	**GX390U1QA2**
Type	Air cooled 4-stroke OHV petrol engine, 25° inclined cylinder, horizontal shaft, cast iron sleeve
Bore X Stroke	3.2 in. X 2.5 in. (88 mm x 64 mm)
Displacement	389 cm^3
Max. Output	11.7 H.P. (8.7 kW) @ 3600 RPM
Continuous Rated Power	6.4 kW (8.6 HP)/3,000 rpm 7.0 kW (9.4 HP)/3,600 rpm
Max. Net Torque	26.5 Nm/2.70 kgfm/2,500 rpm
Ignition System	Digital CDI with variable ignition timing
Fuel Tank Capacity	1.61 U.S. Gallons (Approx. 6.1 Liters)
Fuel	Unleaded Gasoline
Lube Oil Capacity	1.06 qt. (1.1 liters)
Oil Type	4-Stroke API, SF or SG SAE 10W-30 General Use
Speed Control Method	Centrifugal Flyweight Type
Cooling System	Forced Air
Starting Method	Recoil Start
Spark Plug Type	BPR6ES NGK
Spark Plug Gap	0.028-0.031 in. (0.70 - 0.80 mm)
Dimension (L x W x H)	16.0 x 18.1 X 17.6 in. (406 X 460 X 448 mm)
Dry Net Weight	69.9 lbs (31.7 Kg.)

APPLICATION

This mixer is ***only*** intended for the mixing of ***plaster*** and ***mortar***. The mixer must be used for its intended purpose and is not suitable for the mixing of ***flammable*** or ***explosive*** substances. The mixer ***must not be used*** in an explosive atmosphere.

The drum capacity of this hydraulic mixer is 12.0 cu. ft. (340 liters) with a batch capacity between 3-1/2 and 4-1/2 bags. Mixer is shipped completely assembled and has been factory tested and is ready for use.

POWER PLANTS

Mixer is powered by a 11.7 HP, air-cooled, 4-stroke gasoline engine. Refer to Table 2 for specific engine details.

HARDWARE

Check all hardware on the mixer before starting. Periodically inspect all hardware. Loose hardware can contribute to early component failure and poor performance. Use Table 4 as general guideline when the torqueing of mixer hardware is required. Remember to keep all mixer hardware components tight.

Table 4. Hardware Torque Recommendations

Hardware Diameter	Torque (ft-lbs)
5/16-inch x 18	14
3/8-inch x 16	24
3/8-inch x 24	37
1/2-inch x 13	39
1/2-inch x 13 (Grade 8)	90

ENGINE MAINTENANCE

For basic engine maintenance, refer to the engine maintenance section in this manual. For more detailed engine maintenance, refer to the Honda Engine Owner's manual furnished with the engine.

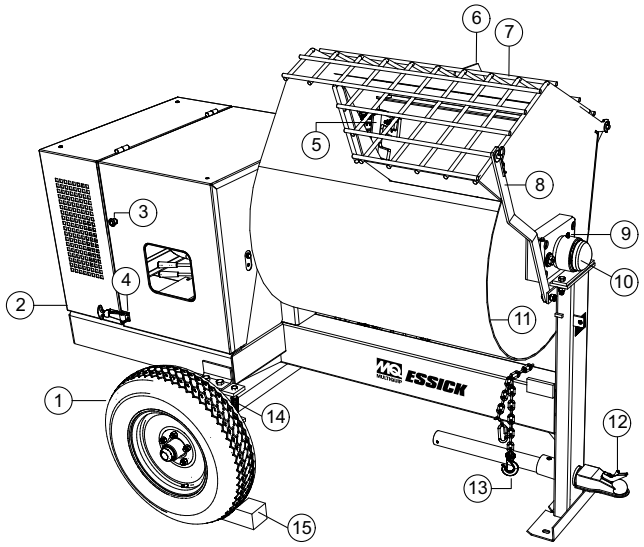

Figure 2. Mixer Major Components

1. **Tires Ply** — The tire ply (layers) number is rated in letters. This mixer uses 13-inch 2-ply tires. Replace with only recommended type tires.
2. **Engine Cover —** Lift this cover to gain access to the engine or electric motor.
3. **ON/OFF Switch** — This switch is located on the side of the mixer frame. When activated it will shut down the engine. Pull out when starting the engine.
4. **Cabinet/Latch** — Encloses engine and electric motor (option). **NEVER** run mixer with cabinet removed. Use latches to secure engine compartment cabinet.
5. **Mixing Paddles —** This mixer uses rubber mixing paddles for the mixing of plaster and mortar. Always clean paddles after each use
6. **Bag Cutter —** This feature allows mixing bags to be opened easily, therefore allowing the contents of the bag to fall directly into the mixing drum.
7. **Safety Grill —** Provided for operator safety. This safety grill is designed to keep hands and solid objects out of the mixing drum when in use. This grill should be closed at all times when mixer is in use. **DO NOT** remove the grill or grill opening bar. Keep the grill clean by washing it down daily.
8. **Safety Grill Lock Handle —** To prevent injury to hands and arms, the safety grill should **ALWAYS** be locked when the mixing of plaster or mortar is required. Also when transporting the mixer the safety grill should be locked. The safety grill should only be un-locked when cleaning of the blades and drum is required.
9. **Pivot Point/Zerk Fitting —** There is a zerk grease fitting on each end of the mixing drum. These fittings lubricate the dumping mechanism. Lubricate both fittings at least twice a week.
10. **Drum Bearing —** There is a sealed bearing on each end of the mixing drum. Bearings are packed and sealed at the factory and require no further maintenance.
11. **Mixing Drum —** Steel mixing drum. Drum capacity is 12 cu. ft (340 liters). Mixing materials such as mortar, plaster are to be placed into this drum for mixing. Always clean the drum after each use. **DO NOT** use this mixing drum for the mixing of ***volatile or hot liquids***.
12. **Tow Bar/Coupler** — This mixer uses various towing bars, please reference the frame assembly drawing and parts list in this manual to determine which tow bar meets your requirements.
13. **Safety Chain** — This mixer uses a 3/16-inch thick, 72 inches long zinc-plated saftey chain. **ALWAYS** connect the safety chain when towing.
14. **Cantilever (U-Type) Suspension** — This mixer uses a cantilever type suspension. Check the mounting hardware for bolt hole elongation and tightness. See maintenance section of this manual for recommended maintenance.
15. **Chock Blocks** — Place these blocks (not included as part of the mixer package) under each mixer wheel to prevent rolling, when mixer is not connected to the towing vehicle.

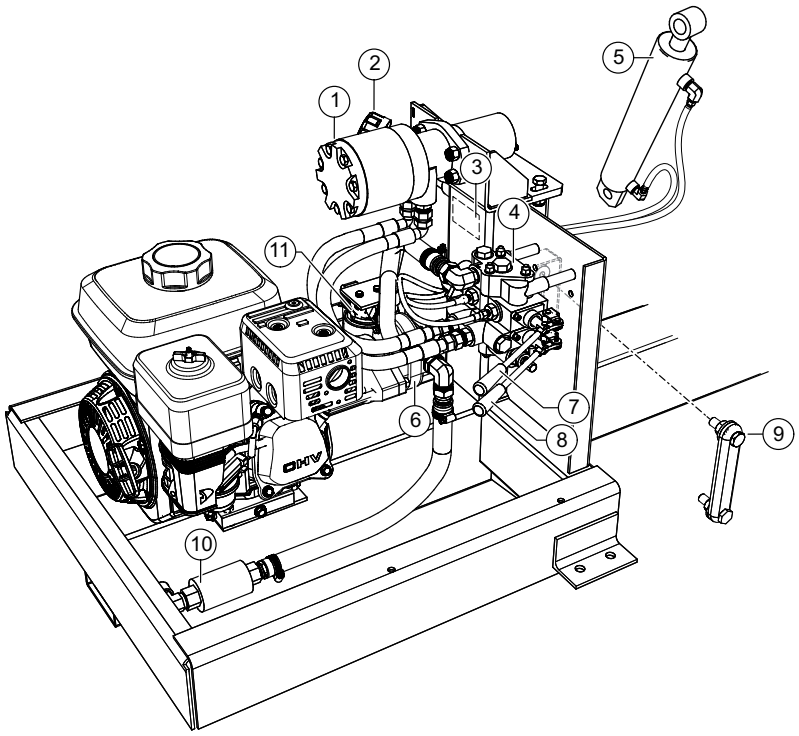

Figure 3. Hydraulic Components

Figure 3 illustrates the hydraulic components used on the mixer.

1. **Hydraulic Motor —** Bi-directional hydraulic motor that is used in conjunction with the directional control valve to operate the hydraulic dump cylinder and paddle shaft.
2. **Hydraulic Oil Cap —** Remove this cap to add hydraulic oil to the hydraulic oil tank. Fill with hydraulic oil as listed in Table 1. Make sure cap is tightened securely.
3. **Hydraulic Oil Tank —** This tank has a capacity of 12 gallons (45 liters). Fill with only recommended hydraulic oil type as listed in Table 1.
4. **Hydraulic Valve —** Directional hydraulic control valve. Controls the direction of hydraulic fluid supplied to the dump cylinder and paddle shaft.
5. **Hydraulic Dump Cylinder —** When activated, this cylinder will cause the mixing drum to rotate to the dump position.
6. **Hydraulic Pump —** Supplies hydraulic fluid to the hydraulic control valve.
7. **Hydraulic Dump Lever —** Pull lever ***outward*** to place mixing drum in the dump position. Push lever ***inward*** to return mixing drum to the upright position.
8. **Hydraulic Paddle Blade Lever —** 3-position lever. Push ***inward*** for clockwise rotation of blades, pull outward for counterclockwise rotation of blades. Place in center position for no blade rotation (neutral).
9. **Hydraulic Oil Sight Gauge —** This gauge indicates the level and temperature of the hydraulic oil. For normal operation oil level should be visible at the 3/4 point on the sightglass.
10. **Strainer —** Filters out large particles and debris that are harmful to the hydraulic system.
11. **Hydraulic Oil Filter —** 10 micron hydraulic filter. Filters out small particles that are harmful to the hydraulic system.

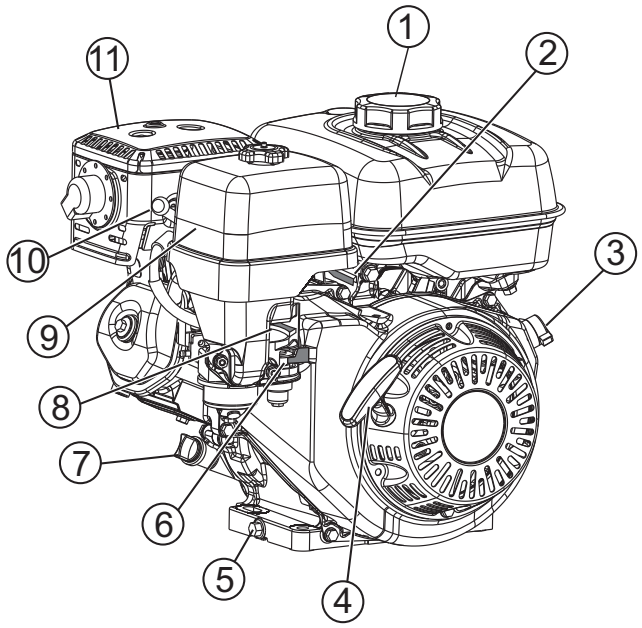

Figure 4. Engine Components

INITIAL SERVICING

The engine (Figure 4) must be checked for proper lubrication and filled with fuel prior to operation. Refer to the manufacturer's engine manual for instructions and details of operation and servicing.

1. **Fuel Filler Cap/Fuel Tank** – Remove this cap to add unleaded gasoline to the fuel tank. Fill with unleaded gasoline. Refer to Table 2 for fuel tank capacity. Make sure cap is tightened securely. **DO NOT** over fill. For additional information refer to Honda engine owner's manual.

DANGER



Add fuel to the tank only when the engine is stopped and has had an opportunity to cool down. In the event of a fuel spill, **DO NOT** attempt to start the engine until the fuel residue has been completely wiped up and the area surrounding the engine is dry.

2. **Throttle Lever** – Used to adjust engine RPM speed.
3. **Engine On/Off Switch** – **ON** position permits engine starting, **OFF** position stops engine operation.
4. **Recoil Starter (pull rope)** – Manual-starting method. Pull the starter grip until resistance is felt, then pull briskly and smoothly.
5. **Oil Drain Plug** – Remove this plug to remove oil from the engine's crankcase.
6. **Fuel Valve Lever** – **OPEN** to let fuel flow, **CLOSE** to stop the flow of fuel.
7. **Dipstick/Oil Filler Cap** – Remove this cap to determine if the engine oil is low. Add oil through this filler port as recommended in Table 5.
8. **Choke Lever** – Used in the starting of a cold engine, or in cold weather conditions. The choke enriches the fuel mixture.
9. **Air Cleaner** – Prevents dirt and other debris from entering the fuel system. Remove wing-nut on top of air filter canister to gain access to filter element.

NOTICE

Operating the engine without an air filter, with a damaged air filter, or a filter in need of replacement will allow dirt to enter the engine, causing rapid engine wear.

10. **Spark Plug** – Provides spark to the ignition system. Set spark plug gap according to engine manufacturer's instructions. Clean spark plug once a week.
11. **Muffler** – Used to reduce noise and emissions. **NEVER** touch when ***hot!***

TOWING SAFETY PRECAUTIONS

⚠ CAUTION

Check with your county or state safety towing regulations department before towing your ***mixer.***

To reduce the possibility of an accident while transporting the mixer on public roads, always make sure that the mixer towing components and the towing vehicle are in good operating condition and both units are mechanically sound.

The following list of suggestions should be used when towing the mixer:

- Make sure that the hitch and coupling of the towing vehicle are rated equal to, or greater than the trailer "gross vehicle weight rating" (GVWR).
- **ALWAYS** inspect the hitch and coupling for wear. **NEVER** tow the mixer with defective hitches, couplings, chains etc.
- **CHECK** the tire air pressure on both the towing vehicle and the trailer. Also check the tire tread wear on both vehicles.
- **ALWAYS** make sure the mixer is equipped with a **"Safety Chain."**
- **ALWAYS** attach trailer's safety chain to the frame of towing vehicle.
- **ALWAYS** make sure that the towing vehicle's directional, backup, and brake lights are working properly.
- Remember in most cases the maximum speed unless otherwise posted for highway towing is **55 MPH,** however before towing your mixer, check your local state, and county vehicle towing requirements. Recommended off-road towing is not to exceed **15 MPH** or less depending on type of terrain.
- Place ***chocked blocks*** underneath wheels to prevent ***rolling***, while parked, if disconnected from towing vehicle.
- Inflate tires to correct pressure, inspect tires for cuts, and excessive wear. See Table 7 (Tire Wear Troubleshooting).
- When towing of the mixer is required, place the drum in the up position (mouth facing upwards).
- **ALWAYS** make sure that the fuel valve lever is in the **OFF** position (gasoline models only).
- Check wheel mounting lug nuts with a torque wrench. Torque wheel lug nuts as described in the maintenance section of this manual.
- Check tightness of U-clamp nuts, torque suspension hardware as referenced in the maintenance section of this manual.
- Avoid sudden stops and starts. This can cause skidding, or jackknifing. Smooth, gradual starts and stops will improve gas milage.
- Avoid sharp turns to prevent rolling.

⚠ CAUTION

If the mixer tow bar is deformed or damaged replace entire tow bar. **NEVER** tow the mixer with a defective tow bar. There exist the possibility of the trailer separating from the **towing vehicle.**

TOW BAR TO VEHICLE (COUPLER ONLY)

1. Check the vehicle hitch ball, and mixer's coupler for signs of wear or damage. Replace any parts that are worn or damaged before towing.
2. Use only a 2-inch ball diameter (towing vehicle), this will match the mixer's 2-inch coupler. Use of any other ball diameter will create an extremely dangerous condition which can result in separation of the coupler and ball or ball failure.
3. After tow bar has been connected to mixer (see next page), attach mixer's coupler to the hitch ball on the towing vehicle securely and make sure the lock lever is in the down position (locked).

MIXER TOW BAR VEHICLE (PINTLE AND LOOP)

1. Make sure the bumper on the towing vehicle is equipped to handle either a pintle or loop type tow bar configuration.
2. After tow bar has been connected to mixer (see next page), secure either type of tow bar to the towing vehicle, following state and county towing regulations
3. As a minimum, use a 1/2-inch bolt and nylock nut grade 5 when securing either tow bar to the towing vehicle.

⚠ CAUTION

NEVER tow the mixer with the safety chain removed. The safety chain is intended to prevent complete separation of the mixer from the towing vehicle in the event of a tow bar failure.

TOW BAR TO MIXER CONNECTION

Reference Figure A for the installation of the safety chain.

1. Insert the tow bar through the round opening at the bottom of the mixer stand.

   Align the hole on the tow bar with the hole on the mixer frame, and insert 1/2-inch bolt through tow bar and frame. Secure tow bar to frame with 1/2-inch nylock nut. Tighten to 40 ft.-lbs.

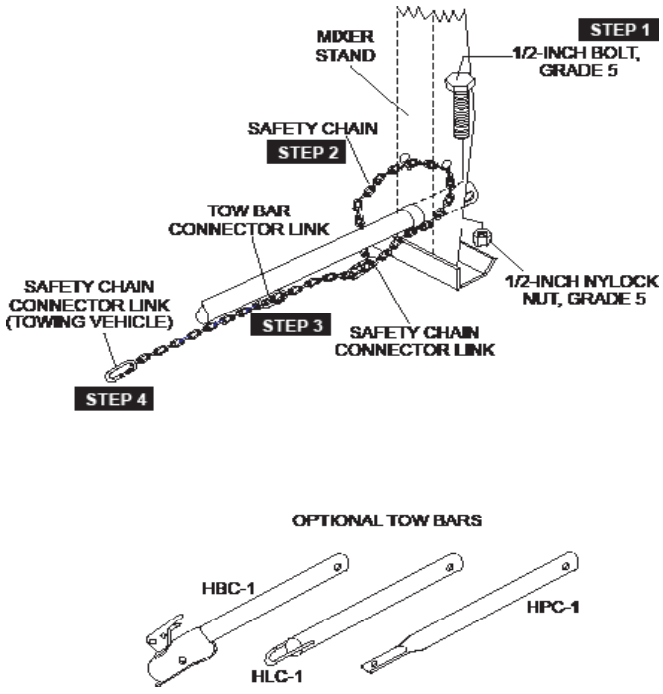

Figure A. Tow Bar and Safety Chain Installation

2. Route the safety chain through the holes just above the tow bar, located on each side of the mixer stand.

   Loop the chain together and place under the tow bar. Secure the loop with the connector link.

3. Extend the safety chain along the length of the tow bar, looping it through the tow bar's connector link. Remove any excess chain slack.

4. Connect the free end of (connector link) the safety chain to the towing vehicle. Remember it is critical that the length of the chain be properly adjusted, to prevent the draw bar and the front of the mixer stand from dropping to the the ground (contact) in the event the draw bar becomes disconnected from the towing vehicle.

⚠ CAUTION

DO NOT tow or lift the mixer unless the mixing drum is completely empty.

⚠ CAUTION

Use a lifting device to lift tow bar onto vehicle coupler. If lifting device is not available, have 2 persons of similar height lift the tow bar. When lifting, do not attempt to lift by bending forward. Bend hips and knees to squat down to your load, keep it close to your body, and straighten your legs to lift.

Adjust paddles as shown in Figure 5.

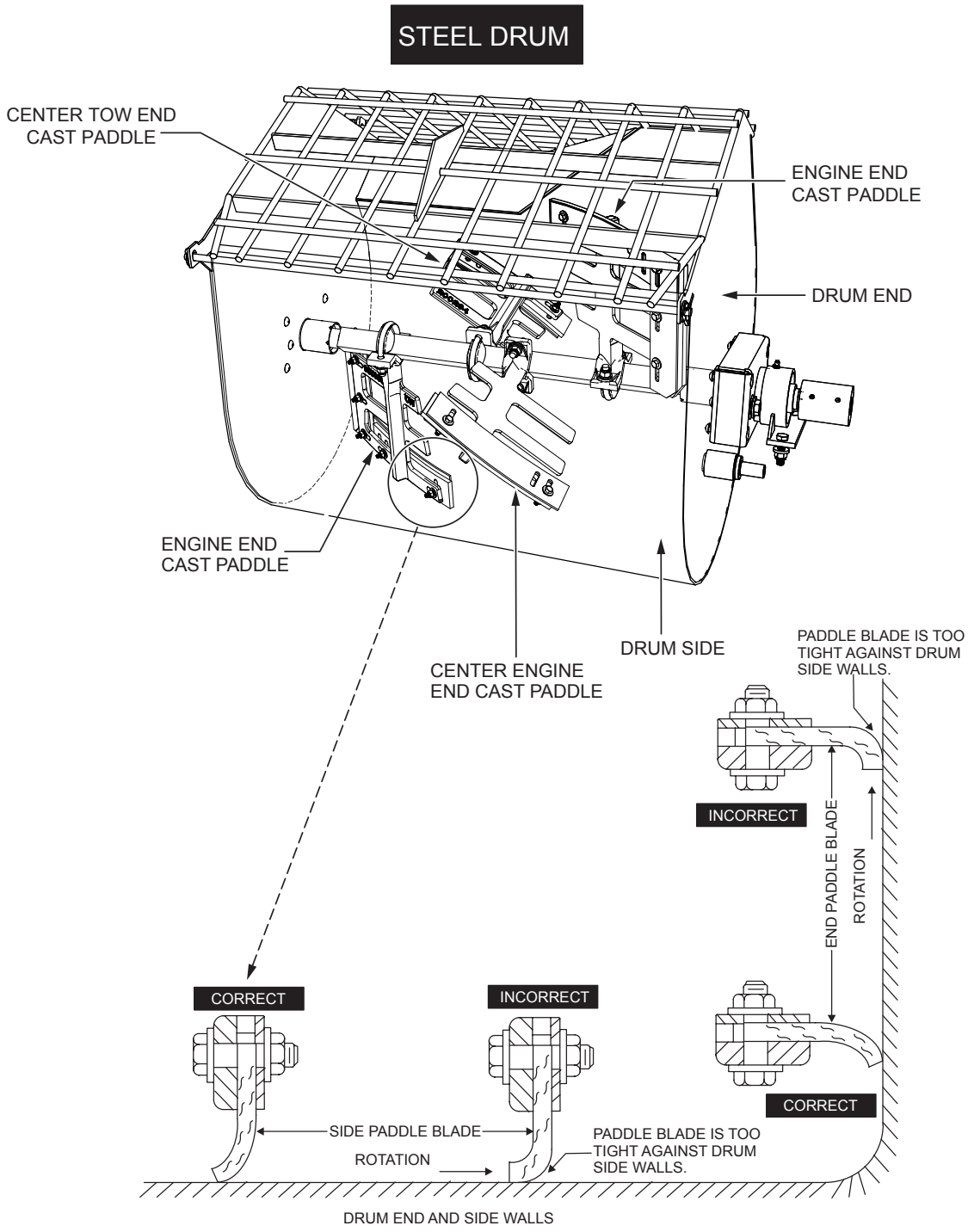

Figure 5. Paddle Blade Adjustment

BEFORE STARTING

1. Read all safety instructions at the beginning of manual.
2. Clean the unit, removing dirt and dust, particularly the engine cooling air inlet, carburetor and air cleaner.
3. Check the air filter for dirt and dust. f air filter is dirty, replace air filter with a new one as required.
4. Check carburetor for external dirt and dust. Clean with dry compressed air.
5. Check fastening nuts and bolts for tightness.

⚠ CAUTION



ALWAYS wear approved eye and hearing protection while operating the mixer.

⚠ CAUTION



NEVER place hands or feet inside the engine guard cover while the engine is running. **ALWAYS** shut the engine down before performing any kind of maintenance service on the mixer.

ENGINE OIL CHECK

1. To check the engine oil level, place the unit on secure level ground with the engine stopped.
2. Remove the filler dipstick from the engine oil filler hole (Figure 6) and wipe it clean.

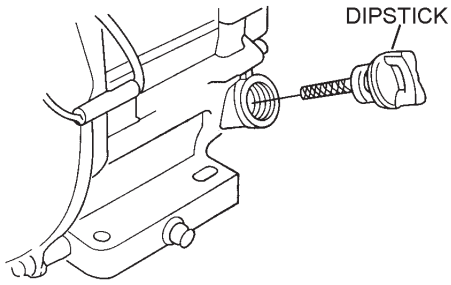

Figure 6. Engine Oil Dipstick (Removal)

3. Insert and remove the dipstick without screwing it into the filler neck. Check the oil level shown on the dipstick.
4. If the oil level is low (Figure 7), fill to the edge of the oil filler hole with the recommended oil type (Table 5). Maximum oil capacity is 2.33 pints (1.09 liters).

NOTICE

Reference engine manufacturer's manual for specific servicing instructions.

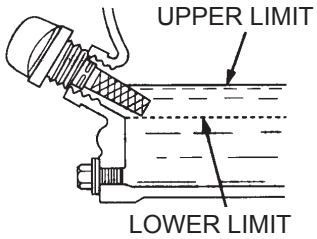

Figure 7. Engine Oil Dipstick (Oil Level)

Table 5. Engine Oil Type

Season	Temperature	Oil Type
Summer	25°C or Higher	SAE 10W-30
Spring/Fall	25°C ~ 10°C	SAE 10W-30/20
Winter	0°C or Lower	SAE 10W-10

FUEL CHECK

⚠ DANGER



If your mixer has a gasoline engine, determine if the engine fuel is low. If fuel is low, remove the fuel filler cap and fill it with **unleaded** gasoline. Motor fuels are ***highly flammable*** and can be dangerous if mishandled. **DO NOT** smoke while refueling. **DO NOT** attempt to refuel the mixer if the engine is **hot!** or **running.**

⚠ CAUTION

NEVER! disable or disconnect the **start/stop switch**. It is provided for operator safety. Injury may result if it is disabled, disconnected or improperly maintained.

1. Remove the gasoline cap located on top of fuel tank.
2. Visually inspect to see if fuel level is low. If fuel is low, replenish with unleaded fuel.
3. When refueling, be sure to use a strainer for filtration. **DO NOT** top-off fuel. Wipe up any spilled fuel immediately.

HYDRAULIC OIL

Check hydraulic oil sight gauge (Figure 8) to ensure that hydraulic oil is at the 3/4 level.



Figure 8. Hydraulic Oil Sight Gauge

HYDRAULIC HOSES

Check ***all*** hydraulic hoses to make sure they are not worn, frayed or defective.

PADDLE BLADE CHECK

Check for ***worn*** or ***defective*** paddle blades (Figure 9). Make sure that all blades are adjusted properly. See blade adjustment procedure in this manual. Replace all defective or damaged blades immediately using the part numbers referenced in the parts section of this manual.

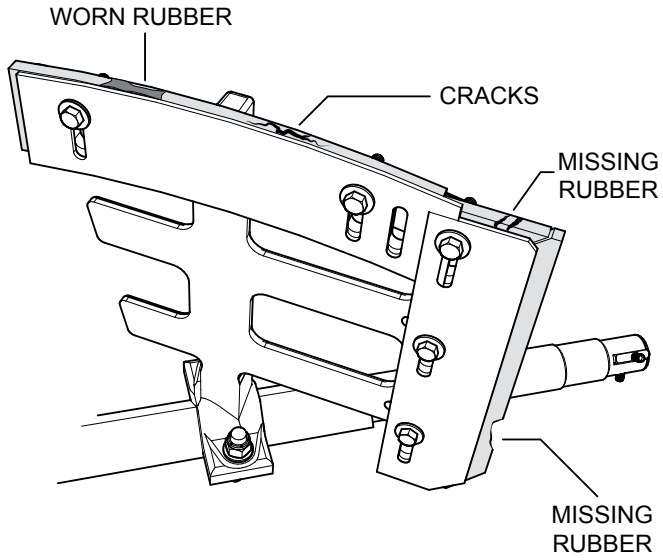

Figure 9. Worn Mixing Blade

TIRES

Check for ***worn*** or ***defective*** tires (Figure 10). Replace any defective or worn tires immediately.

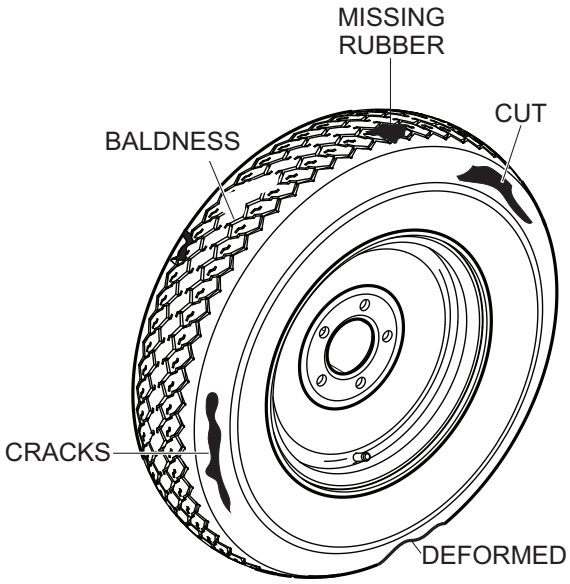

Figure 10. Tire Wear

START/STOP SWITCH

This unit has been equipped with a start/stop switch (Figure 11), which should be tested every time the unit is started.

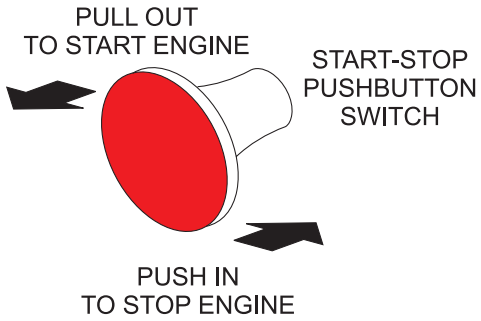

Figure 11. Start/Stop Pushbutton Switch

This section is intended to assist the operator with the initial start-up of the unit. It is extremely important that this section be read carefully before attempting to use the mixer in the field. **DO NOT** use your mixer until this section is thoroughly understood.



WARNING

Failure to understand the operation of the mixer could result in severe damage to the mixer or personal injury. Reference Figure 2 and Figure 3 for the location of any components referenced in this manual.

CAUTION



NEVER operate the mixer in a confined area or enclosed area structure that does not provide ample free flow of air.

The following steps outline the procedure for starting the engine.

1. Move the fuel shut-off lever (Figure 12) to the ON position.

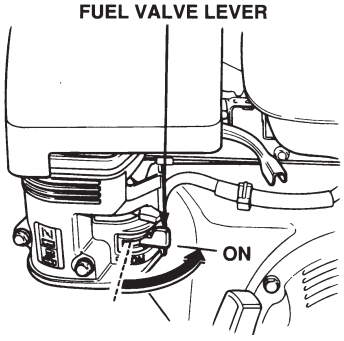

Figure 12. Fuel Shut-Off Lever

2. To start a cold engine, move the choke lever (Figure 13) to the **CLOSED** position.

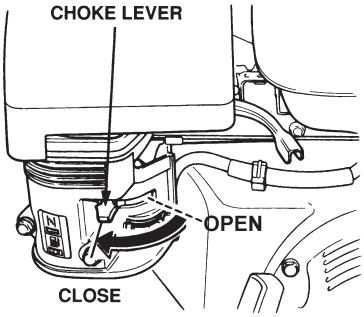

Figure 13. Choke Lever

3. Move the throttle lever (Figure 14) away from the slow position, about 1/3 of the way toward the fast position.

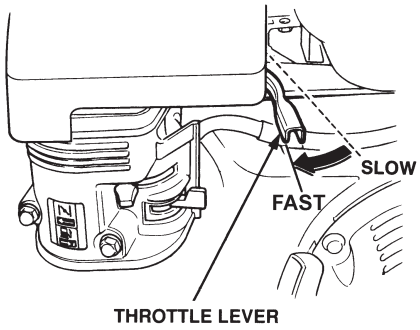

Figure 14. Throttle Lever

4. Turn the engine switch (Figure 15) to the ON position.

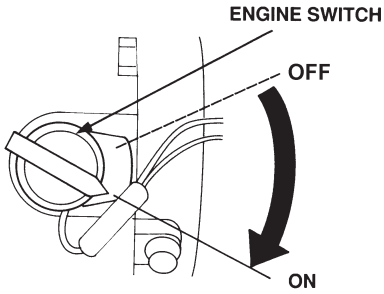

Figure 15. Engine On/Off Switch

5. Located at the rear of the mixer frame is the main ***start/ stop*** button (Figure 16). Pull this button outward to start the engine.

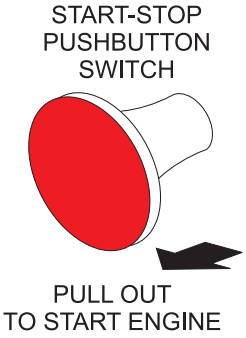

Figure 16. Engine Start/Stop Button

6. Pull the **starter grip** (Figure 17) lightly until you feel resistance, then pull briskly. Return the starter grip gently.

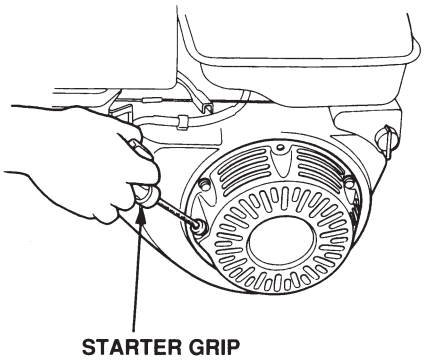

Figure 17. Starter Grip

MIXING

1. On the hydraulic valve, ***push*** the drive control lever (Figure 18) inward for ***clockwise*** mixing rotation of blades. For ***counterclockwise*** rotation, ***pull*** the drive control lever outward.

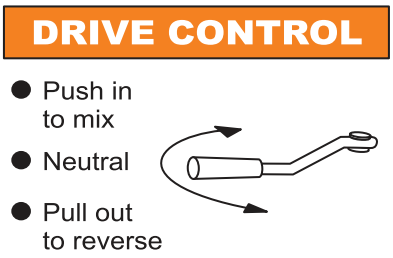

Figure 18. Paddle Shaft Rotation Lever

2. The paddle shaft inside the drum should be rotating at this time.
3. Add a small amount water to the mixing drum (Figure 19).
4. Lift the mixing bag compound (Figure 19) onto the steel safety grate over the ***bag cutter*** and let the contents fall into the drum. Add more water if desired and mix compound to desired consistency.

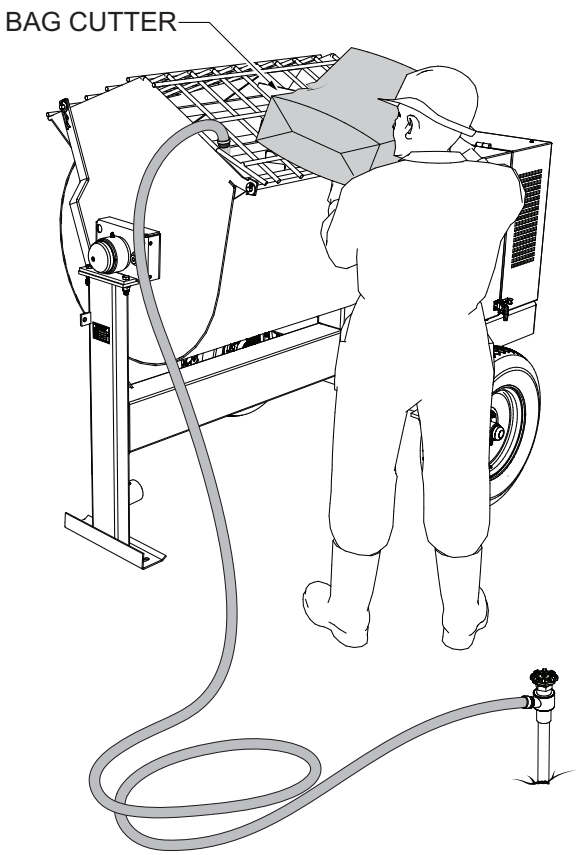

Figure 19. Filling Mixing Drum

DUMPING

CAUTION



NEVER stand in ***front*** or ***behind*** the mixing drum while it is being placed in the ***dump position***. Stay clear of the mixing drum while it is being positioned.

1. Pull hydraulic dump lever (Figure 20) outward to place drum in ***dump*** position (Figure 21).

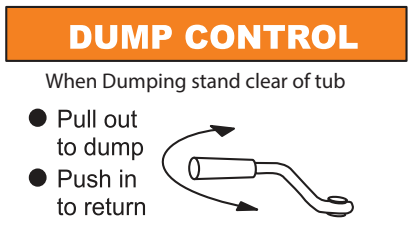

Figure 20. Dump Control Lever

⚠ WARNING

When rotating the mixing drum from the dump position to the upright position, **keep hands clear of safety grate.** The possibility exists of hands or fingers being crushed.

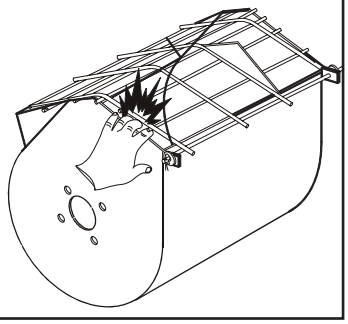

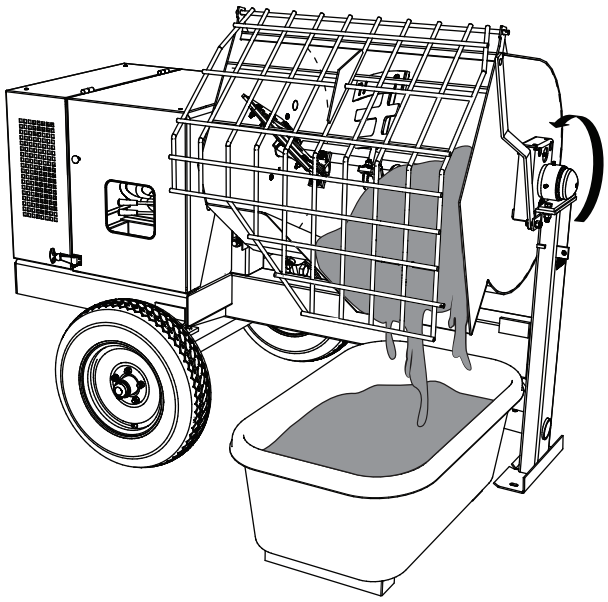

Figure 21. Drum (Dump Position)

2. Push hydraulic dump lever inward to place drum back in the upright position.

STOPPING THE MIXER

1. Push the main **start/stop** switch (Figure 22) inward to stop the engine.

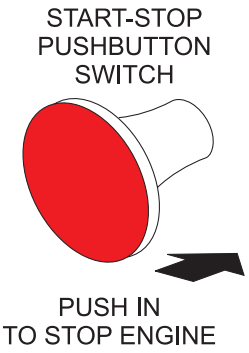

Figure 22. Start/Stop Button (Stop Position)

2. Place fuel shut-off lever in the **OFF** position.
3. Clean drum of all debris and foreign matter.

Use Table 6 as a general maintenance guideline when servicing your engine. For more detail engine maintenance information, refer to the engine owner's manual supplied with your engine.

Table 6. Engine Maintenance Schedule

DESCRIPTION (3)	OPERATION	BEFORE	FIRST MONTH OR 10 HRS.	EVERY 3 MONTHS OR 25 HRS.	EVERY 6 MONTHS OR 50 HRS.	EVERY YEAR OR 100 HRS.	EVERY 2 YEARS OR 200 HRS.
Engine Oil	Check	X					
	Change		X				
Air Cleaner	Check	X					
	Change			X (1)			
All Nuts and Bolts	Re-tighten if necessary	X					
Spark Plugs	Check/Clean				X		
	Replace						X
Cooling Fins	Check				X		
Spark Arrester	Clean					X	
Fuel Tank	Clean					X	
Fuel Filter	Check					X	
Idle Speed	Check/ Adjust					X (2)	
Valve Clearance	Check/ Adjust						X (2)
Fuel Lines	Check	Every 2 years (replace if necessary) (2)					

(1) Service more frequently when used in **DUSTY** areas.

(2) These items should be serviced by your service dealer, unless you have the proper tools and are mechanically proficient. Refer to the HONDA Shop Manual for service procedures.

(3) For commercial use, log hours of operation to determine proper maintenance intervals.

MAINTENANCE

Perform the scheduled maintenance procedures as defined by Table 6 and below:

DAILY

- Thoroughly remove dirt and oil from the engine and control area. Clean or replace the air cleaner elements as necessary. Check and retighten all fasteners as necessary.

Wiring

Inspect the entire mixer for bad or worn electrical wiring or connections. If any wiring or connections are exposed (insulation missing) replace wiring immediately.

Piping and Hose Connection

Inspect all piping, oil hose, hydraulic hose and fuel hose connections for wear and tightness. Tighten all hose clamps and check for leaks. If any hose lines are defective replace them immediately.

Fuel Strainer

1. Thoroughly clean the area around the fuel cap.
2. Remove the fuel cap from the fuel tank.
3. Next, remove, inspect and clean the fuel strainer (Figure 23) with solvent.

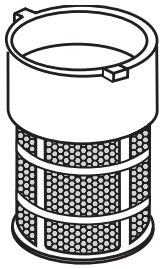

Figure 23. Fuel Strainer

Spark Plug

1. Remove and clean the spark plug (Figure 24), then adjust the spark gap to 0.024 ~0.028 inch (0.6~0.7 mm). This unit has electronic ignition, which requires no adjustments.

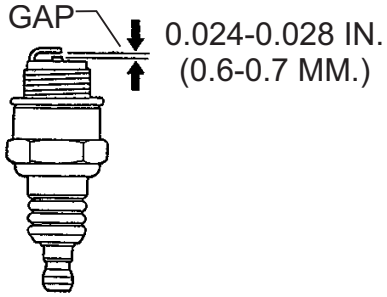

Figure 24. Spark Plug Gap

ENGINE OIL

2. Drain the engine oil when the oil is warm as shown in Figure 25.
3. Remove the oil drain bolt and sealing washer and allow the oil to drain into a suitable container.
4. Replace engine oil with recommended type oil as listed in Table 5. For engine oil capacity, see Table 2 (Engine Specifications). **DO NOT** overfill.
5. Install drain bolt with sealing washer and tighten securely.

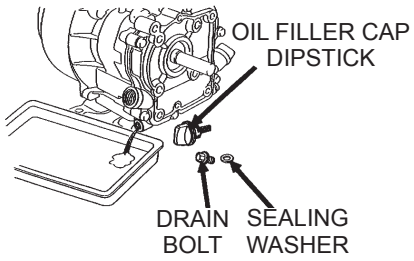

Figure 25. Draining Engine Oil

ENGINE AIR CLEANER

1. Remove the air cleaner cover and foam filter element as shown in Figure 26.
2. Tap the paper filter element (Figure 26) several times on a hard surface to remove dirt, or blow compressed air [not exceeding 30 psi (207 kPa, 2.1 kgf/cm2)] through the filter element from the air cleaner case side. **NEVER** brush off dirt. Brushing will force dirt into the fibers. Replace the paper filter element if it is excessively dirty.
3. Clean foam element in warm, soapy water or nonflammable solvent. Rinse and dry thoroughly. Dip the element in clean engine oil and completely squeeze out the excess oil from the element before installing.

⚠ DANGER

DO NOT use gasoline as a cleaning solvent to avoid creating the risk of fire or an explosion.

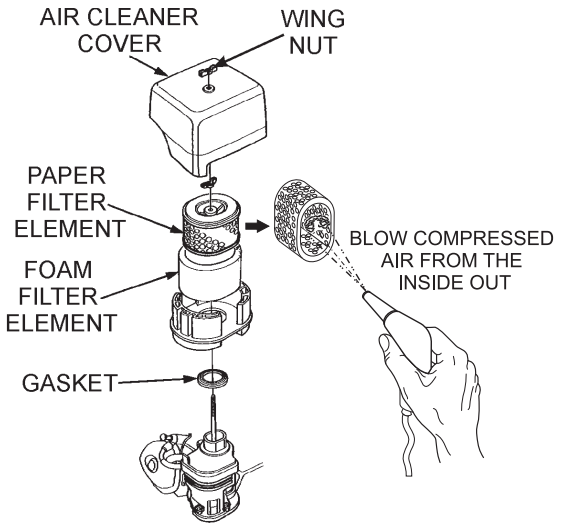

Figure 26. Engine Air Cleaner

SPARK ARRESTER CLEANING

Clean the spark arrester every 6 months or 100 hours.

1. Remove the 4 mm screw (3) from the exhaust deflector (Figure 27), then remove the deflector.

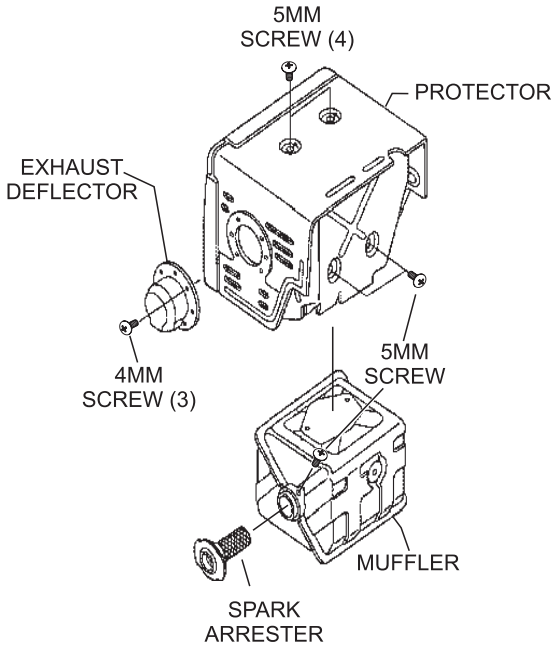

Figure 27. Spark Arrester

2. Remove the 5 mm screw (4) from the muffler protector, then remove the muffler protector.
3. Carefully remove carbon deposits from the spark arrester screen (Figure 28) with a wire brush

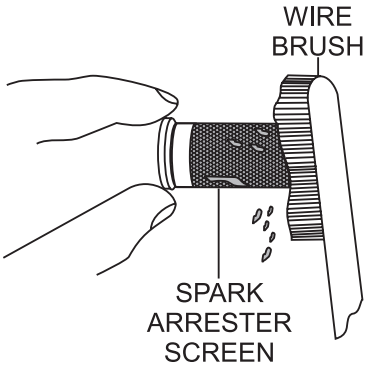

Figure 28. Cleaning The Spark Arrester

4. If the spark arrester is damaged and has breaks or holes, replace with a new one.
5. Reinstall the spark arrester and muffler protector in reverse order of disassembly.

DRUM HEAD SEALS

On each end of the mixing drum there is a drum head containing self-adjusting graphite seals. These seals consist of packing rings, split gland and spring activated adjusters. A properly maintained seal prevents material from working around the shaft, causing excessive wear. The following is the suggested procedure of maintenance for protection of the paddle shaft.

1. Keep drum head clean of material build up so the spring adjusters are free to work.
2. As the seals naturally wear, material will seep from the drum head. Tighten the adjusting nuts equally until a slight pressure is felt (Figure 29). The seals are now tight. This procedure should be done periodically as the seals leak.

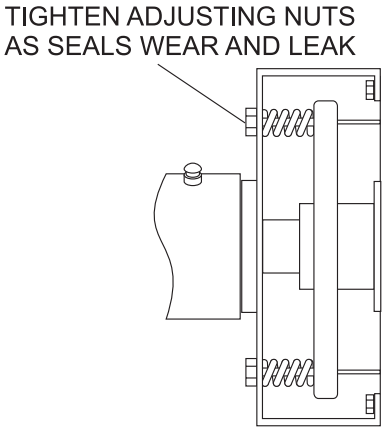

Figure 29. Drum Seal Adjusting Nuts

3. Once the pressure plate touches the drum, its time to replace the graphite seals (Figure 30).

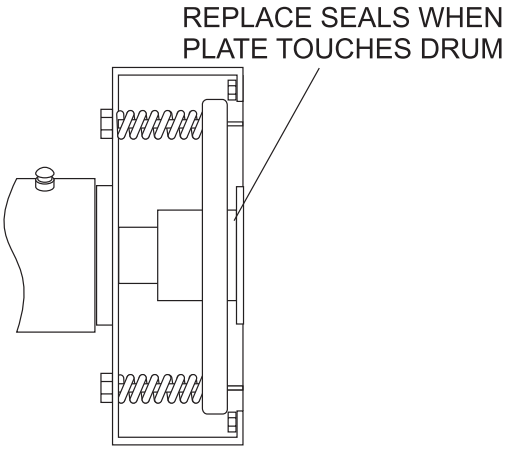

Figure 30. Replacing Drum Seals

DRUM BEARING BRACKET LUBRICATION

There is 1 set of drum bearing brackets (Figure 31) that will require lubrication. These brackets are intended to make the drum rotate freely. Lubricate the grease fitting for each drum bearing bracket ***every month or when the drum becomes difficult*** *to position* using multi-purpose grade grease.

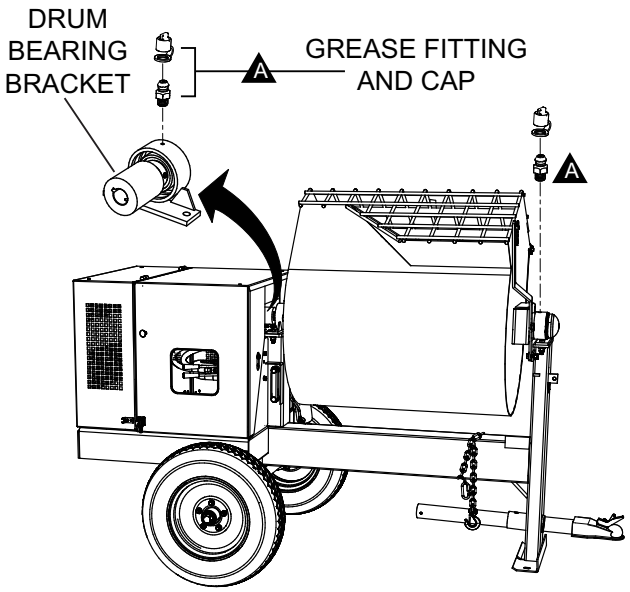

Figure 31. Grease Fittings (Dumping Mechanism)

HYDRAULIC OIL FILTER

Replace hydraulic oil filter (Figure 32) every 500 hours. Hydraulic tank capacity is 12 gallons (45 liters). Refill with any of the following hydraulic oil types. Shell Tellius 68, Mobil DFE26 or Texaco Rand HDC

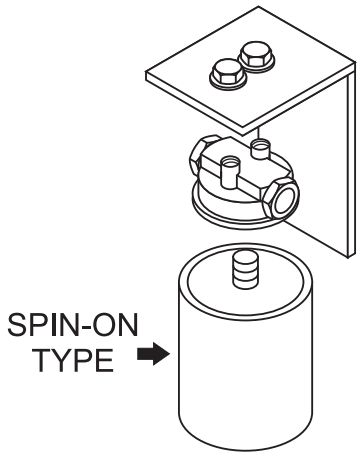

Figure 32. Hydraulic Oil Filter

HYDRAULIC DUMP CYLINDER

Lubricate the grease fitting (Figure 33) on the dump cylinder using multi-purpose grade grease ***every two weeks***.

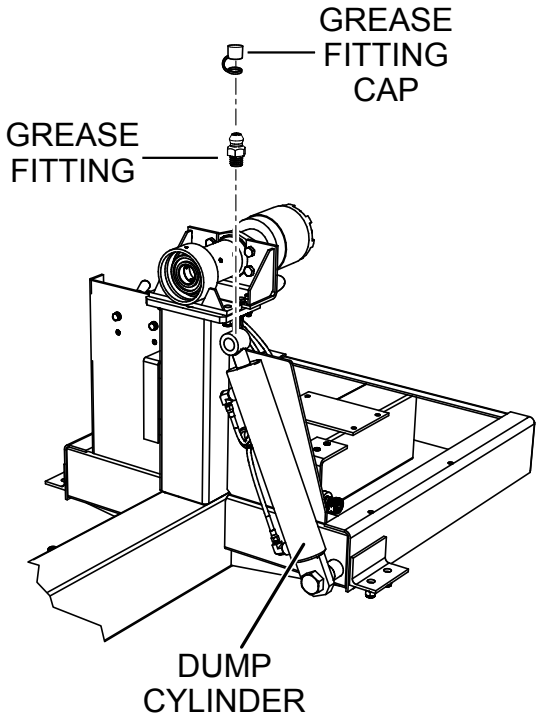

Figure 33. Dump Cylinder Grease Fitting

BALL SOCKET AND CLAMP FACE MAINTENANCE

1. If the towing vehicle is equipped with a ball socket, smear socket periodically with multi-purpose grease. This will keep the ball socket well lubricated.
2. Periodically oil **pivot points** and **clamp face** surfaces of coupler with SAE 30 WT. motor oil.
3. When parking or storing your mixer. Keep the coupler off the ground so dirt will not build up in the ball socket.

WHEEL BEARINGS

1. After ***every 3 months*** of operation, remove the hub dust cap and inspect the wheel bearings (Figure 34). Once a year, or when required, disassemble the wheel hubs remove the old grease and repack the bearings forcing grease between rollers, cone and cage with a good grade of high speed wheel bearing grease (never use grease heavier than 265 A.S.T.M. penetration ("No. 2.").

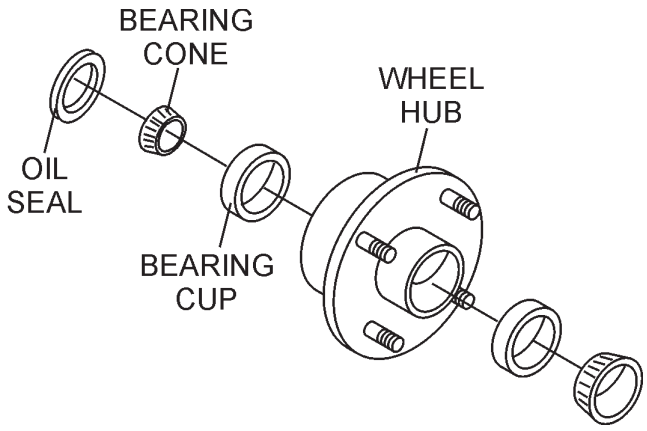

Figure 34. Wheel Hub and Bearings

2. Fill the wheel hub (Figure 34) with grease to the inside diameter of the outer races and also fill the hub grease cap. Reassemble the hub and mount the wheel. Then tighten the adjusting nut, at the same time turn the wheel in both directions, until there is a slight bind to be sure all the bearing surfaces are in contact.

   Then back-off the adjusting nut 1/6 to 1/4 turn or to the nearest locking hole or sufficiently to allow the wheel to rotate freely within limits of .001" to .010" end play. Lock the nut at this position. Install the cotter pin and dust cap, and tighten all hardware.

MIXER CLEANING

It is important that the drum interior is free of dried material. Obstructions can cause the paddle blades to lock against the drum.

1. Push the **"Engine Stop"** button inward to the **OFF** position to the stop the engine.
2. Place the hydraulic paddle lever (Figure 18) in the ***neutral*** position do disengage.
3. ***ALWAYS disconnect the spark plug wire*** (gasoline engines) before cleaning the inside of the drum. If mixer is equipped with an electric motor ***remove power cord from AC power source***. In addition make sure the clutch engagement lever is ***disengaged***.
4. Place **"Do Not Operate"** tag on mixer.
5. Make sure the rear section of safety grate is connected to the mixing drum.

6. At the end of each day's operation, place mixer drum in an upright position and spray inside of tub immediately with water to prevent lumps of dried mortar or plaster from forming and contamination of future batches.
7. **DO NOT** allow a buildup of materials to form on the blades or anywhere inside the drum.
8. Rotate mixer to ***dump*** position and remove debris.
9. ***Thoroughly clean*** the entire mixer, wheels, cabinet and frame.
10. ***NEVER!*** pour or spray water over the engine or electric motor (Figure 35).

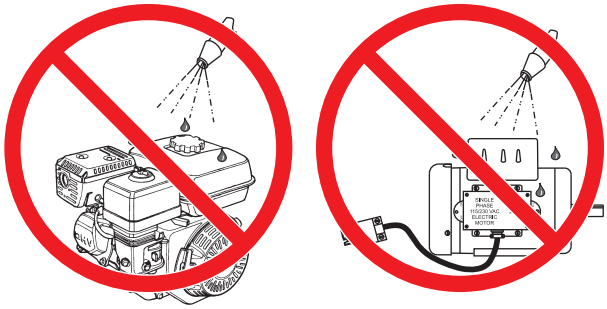

Figure 35. No Spraying of Water

11. When cleaning of the entire mixer is done, return mixing drum to an upright position..

Tires/Wheels/Lug Nuts

Tires and wheels are a very important and critical components of the trailer. When specifying or replacing the trailer wheels it is important the wheels, tires, and axle are properly matched.

WARNING

DO NOT attempt to repair or modify a wheel. **DO NOT** install an inter-tube to correct a leak through the rim. If the rim is cracked, the air pressure in the inter-tube may cause pieces of the rim to explode (break-off) with great force and can cause serious eye or bodily injury.

Tires Wear/Inflation

Tire inflation pressure is the most important factor in tire life. Pressure should be checked cold before operation. **DO NOT** bleed air from tires when they are hot. Check inflation pressure weekly during use to insure the maximum tire life and tread wear.

WARNING

ALWAYS wear safety glasses when removing or installing force fitted parts. Failure to comply may result in serious injury.

Table 7 (Tire Wear Troubleshooting) will help pinpoint the causes and solutions of tire wear problems.

Table 7. Tire Wear Troubleshooting

Wear Pattern		Cause	Solution
	Center Wear	Over Inflation	Adjust pressure to particular load per tire manufacturer
	Edge Wear	Under Inflation	Adjust pressure to particular load per tire manufacturer.
	Side Wear	Loss of chamber or overloading	Make sure load does not exceed axle rating. Align wheels.
	Toe Wear	Incorrect toe-in	Align wheels.
	Cupping	Out of balance	Check bearing adjustment and balance tires.
	Flat Spots	Wheel lockup and tire skidding	Avoid sudden stops when possible and adjust brakes.

Suspension

The cantilever (U-Type) suspension springs and associated components (Figure 36) should be visually inspected monthly for signs of excessive wear, elongation of bolt holes, and loosening of fasteners. Replace all damaged parts (suspension) immediately. Torque locknut securing U-clamp to spring leaf between 45 and 50 ft.-lbs.

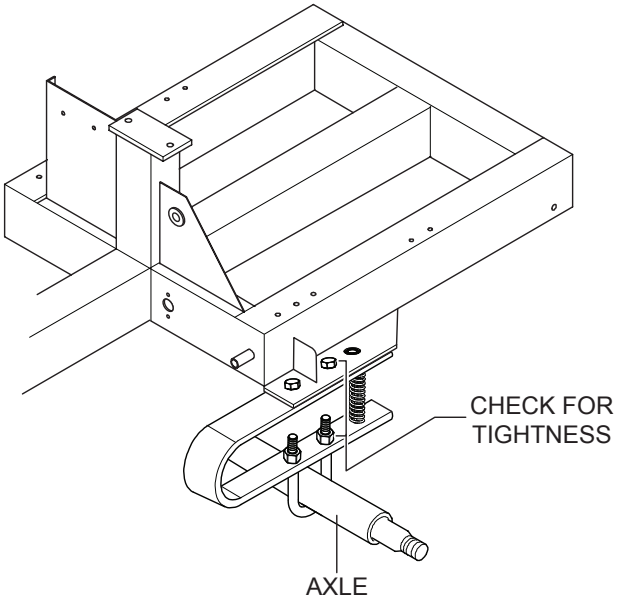

Figure 36. Suspenion Components

Lug Nut Torque Requirements

It is extremely important to apply and maintain proper wheel mounting torque. Be sure to use only the fasteners matched to the cone angle of the wheel. Proper procedure for attachment of the wheels is as follows:

1. Start all wheel lug nuts by hand.
2. Torque all lug nuts in sequence. See Figure 37. **DO NOT** torque the wheel lug nuts all the way down. Tighten each lug nut in 3 separate passes as defined by Figure 37.

Table 8. Tire Torque Requirements			
Wheel Size	**First Pass FT-LBS**	**Second Pass FT-LBS**	**Third Pass FT-LBS**
12"	20-25	35-40	50-65
13"	20-25	35-40	50-65
14"	20-25	50-60	90-120
15"	20-25	50-60	90-120
16"	20-25	50-60	90-120

NOTICE

NEVER use an pneumatic air gun to tighten wheel lug nuts.

3. After first road use, retorque all lug nuts in sequence. Check all wheel lug nuts periodically.

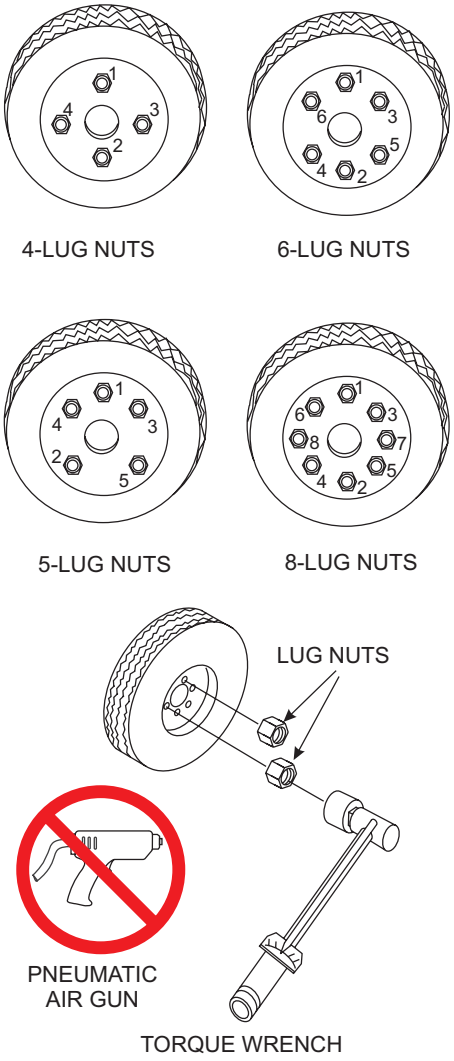

Figure 37. Wheel Lug Nuts Tightening Sequence

MIXER STORAGE

For storage of the mixer for over 30 days, the following is recommended:

- Drain the fuel tank completely, or add STA-BIL to the fuel.
- Run the engine until the fuel is completely consumed.
- Completely drain used oil from the engine crankcase and fill with fresh clean oil, then follow the procedures described in the engine manual for engine storage.
- Clean the entire mixer and engine compartment.
- Place the mixing drum in the down position (mouth facing downward).
- Cover the mixer and place it a clean dry area, that is protected from harsh elements.

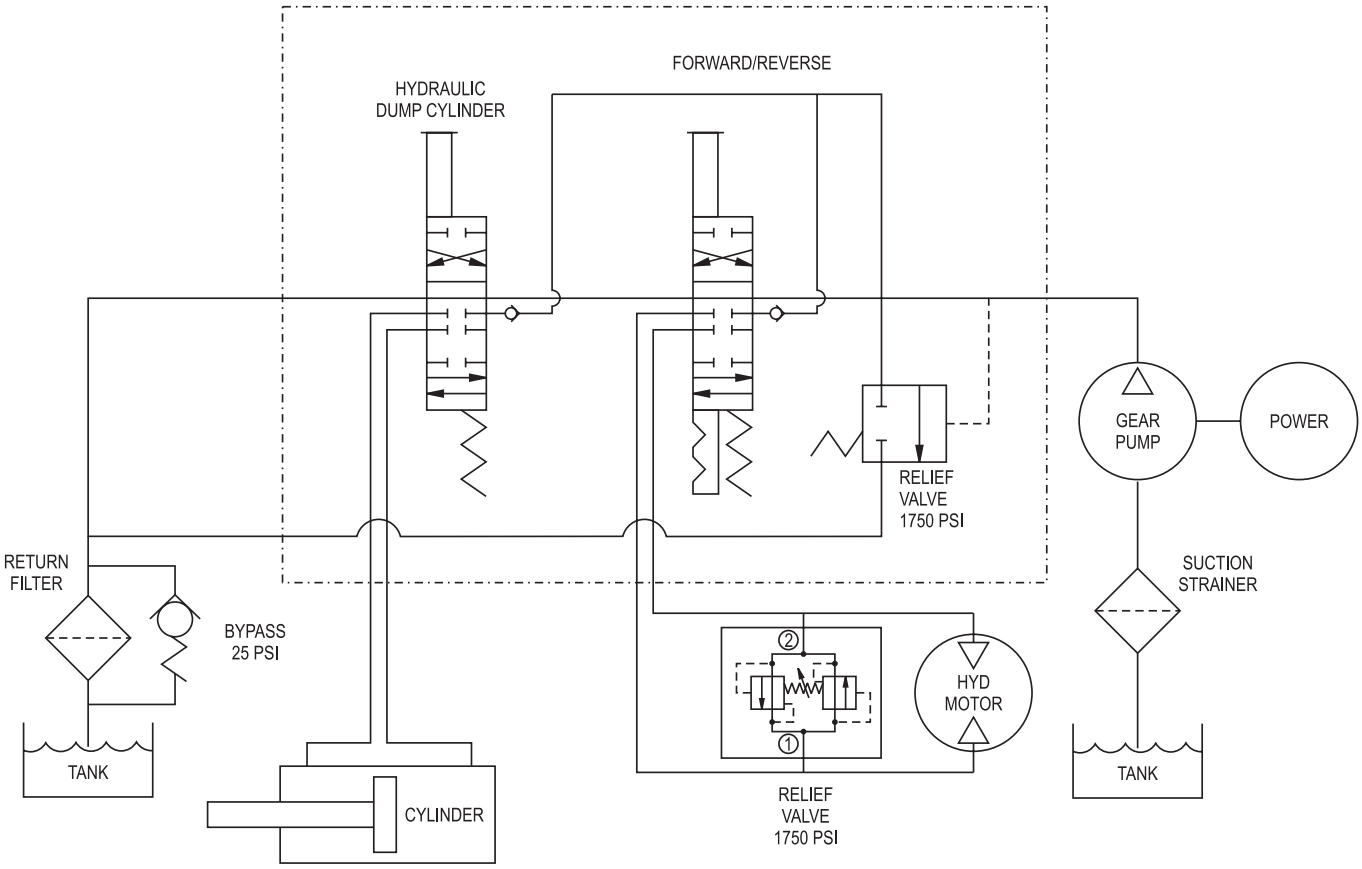

Figure 38. Hydraulic System Diagram

Troubleshooting (Mixer)		
Symptom	**Possible Problem**	**Solution**
Blades will not rotate.	Material load too heavy, exceeding mixer capability?	Reduce amount of material being mixed.
	Object stuck inside mixing drum, jamming paddle rotation?	Stop engine. Empty out drum contents. Remove obstruction.
	Improper engine speed?	Check and adjust engine speed.
	Incorrect relief valve pressure?	Inspect for proper relief pressure.
	Defective hydraulic motor or pump?	Contact MQ Technical Services.
	Slow hydraulic cylinder dumping?	Defective cylinder seal.
Material leaking from drum ends.	Worn or defective paddle shaft seals?	Replace seals.
Drum difficult to discharge (tilt).	Defective or worn drum support brackets?	Apply grease to bracket or replace.
	Blades adjusted too tight.	Adjust blades until they almost touch side walls of drum.

Troubleshooting (Engine)		
Symptom	**Possible Problem**	**Solution**
Difficult to start, fuel is available, but no spark at spark plug.	Spark plug bridging?	Check gap, insulation or replace spark plug.
	Carbon deposit on spark plug?	Clean or replace spark plug.
	Short circuit due to deficient spark plug insulation?	Check spark plug insulation, replace if worn.
	Improper spark plug gap?	Set to proper gap.
	Spark plug is red?	Check transistor ignition unit.
	Spark plug is bluish white?	If insufficient compression, repair or replace engine. If injected air leaking, correct leak. If carburetor jets clogged, clean carburetor.
	No spark present at tip of spark plug?	Check transistor ignition unit is broken, and replace defective unit. Check if voltage cord is cracked or broken and replace. Check if spark plug is fouled. Replace if fouled.
	No oil?	Add oil as required.
	Oil pressure alarm lamp blinks upon starting? (if applicable)	Check automatic shutdown circuit, "oil sensor". (if applicable)
Difficult to start, fuel is available, and spark is present at the spark plug.	ON/OFF switch is shorted?	Check switch wiring, replace switch.
	Ignition coil defective?	Replace ignition coil.
	Improper spark gap, points dirty?	Set correct spark gap and clean points.
	Condenser insulation worn or short circuiting?	Replace condenser.
	Spark plug wire broken or short circuiting?	Replace defective spark plug wiring.
Difficult to start, fuel is available, spark is present and compression is normal.	Wrong fuel type?	Flush fuel system, replace with correct type of fuel.
	Water or dust in fuel system?	Flush fuel system.
	Air cleaner dirty?	Clean or replace air cleaner.
	Choke open?	Close choke.
Difficult to start, fuel is available, spark is present and compression is low.	Suction/exhaust valve stuck or protruded?	Reseat valves.
	Piston ring and/or cylinder worn?	Replace piston rings and/or piston.
	Cylinder head and/or spark plug not tightened properly?	Torque cylinder head bolts and spark plug.
	Head gasket and/or spark plug gasket damaged?	Replace head and spark plug gaskets.
No fuel present at carburetor.	No fuel in fuel tank?	Fill with correct type of fuel.
	Fuel cock does not open properly?	Apply lubricant to loosen fuel cock lever, replace if necessary.
	Fuel filter/lines clogged?	Replace fuel filter.
	Fuel tank cap breather hole clogged?	Clean or replace fuel tank cap.
	Air in fuel line?	Bleed fuel line.
Will not start, no power with key "ON". (if applicable)	ON/OFF device not in ON position?	Place ON/OFF device in ON posotion.

Troubleshooting (Engine) - continued		
Symptom	**Possible Problem**	**Solution**
Weak in power, compression is proper and does not misfire.	Air cleaner dirty?	Clean or replace air cleaner.
	Improper level in carburetor?	Check float adjustment, rebuild carburetor.
	Defective spark plug?	Clean or replace spark plug.
	Improper spark plug?	Set to proper gap.
Weak in power, compression is proper but misfires.	Water in fuel system?	Flush fuel system and replace with correct type of fuel.
	Dirty spark plug?	Clean or replace spark plug.
	Ignition coil defective?	Replace ignition coil.
Engine overheats.	Spark plug heat value incorrect?	Replace with correct type of spark plug.
	Wrong type of fuel?	Replace with correct type of fuel.
	Cooling fins dirty?	Clean cooling fins.
	Intake air restricted?	Clear intake of dirt and debris. Replace air cleaner elements as necessary.
	Oil level too low or too high?	Adjust oil to proper level.
Rotational speed fluctuates.	Governor adjusted incorrectly?	Adjust governor.
	Governor spring defective?	Replace governor spring.
	Fuel flow restricted?	Check entire fuel system for leaks or clogs.
Recoil starter malfunctions. (if applicable)	Recoil mechanism clogged with dust and dirt?	Clean recoil assembly with soap and water.
	Spiral spring loose?	Replace spiral spring.
Burns too much fuel.	Over-accumulation of exhaust products?	Check and clean valves. Check muffler and replace if necessary.
	Wrong spark plug?	Replace spark plug with manufacturer's suggested type.
Exhaust color is continuously "white".	Lubricating oil is wrong viscosity?	Replace lubricating oil with correct viscosity.
	Worn rings?	Replace rings.
Exhaust color is continuously "black".	Air cleaner clogged?	Clean or replace air cleaner.
	Choke valve set to incorrect position?	Adjust choke valve to correct position.
	Carburetor defective, seal on carburetor broken?	Replace carburetor or seal.
	Poor carburetor adjustment, engine runs too rich?	Adjust carburetor.

EXPLANATION OF CODE IN REMARKS COLUMN

The following section explains the different symbols and remarks used in the Parts section of this manual. Use the help numbers found on the back page of the manual if there are any questions.

NOTICE

The contents and part numbers listed in the parts section are subject to change **without notice**. Multiquip does not guarantee the availability of the parts listed.

SAMPLE PARTS LIST

NO.	PART NO.	PART NAME	QTY.	REMARKS
1	12345	BOLT	1	INCLUDES ITEMS W/%
2%		WASHER, 1/4 IN		NOT SOLD SEPARATELY
2%	12347	WASHER, 3/8 IN	1	MQ-45T ONLY
3	12348	HOSE	A/R	MAKE LOCALLY
4	12349	BEARING	1	S/N 2345B AND ABOVE

NO. Column

Unique Symbols — All items with same unique symbol

(@, #, +, %, or >) in the number column belong to the same assembly or kit, which is indicated by a note in the "Remarks" column.

Duplicate Item Numbers — Duplicate numbers indicate multiple part numbers, which are in effect for the same general item, such as different size saw blade guards in use or a part that has been updated on newer versions of the same machine.

NOTICE

When ordering a part that has more than one item number listed, check the remarks column for help in determining the proper part to order.

PART NO. Column

Numbers Used — Part numbers can be indicated by a number, a blank entry, or TBD.

TBD (To Be Determined) is generally used to show a part that has not been assigned a formal part number at the time of publication.

A blank entry generally indicates that the item is not sold separately or is not sold by Multiquip. Other entries will be clarified in the "Remarks" Column.

QTY. Column

Numbers Used — Item quantity can be indicated by a number, a blank entry, or A/R.

A/R (As Required) is generally used for hoses or other parts that are sold in bulk and cut to length.

A blank entry generally indicates that the item is not sold separately. Other entries will be clarified in the "Remarks" Column.

REMARKS Column

Some of the most common notes found in the "Remarks" Column are listed below. Other additional notes needed to describe the item can also be shown.

Assembly/Kit — All items on the parts list with the same unique symbol will be included when this item is purchased.

Indicated by:

"INCLUDES ITEMS W/(unique symbol)"

Serial Number Break — Used to list an effective serial number range where a particular part is used.

Indicated by:

"S/N XXXXX AND BELOW"
"S/N XXXX AND ABOVE"
"S/N XXXX TO S/N XXX"

Specific Model Number Use — Indicates that the part is used only with the specific model number or model number variant listed. It can also be used to show a part is NOT used on a specific model or model number variant.

Indicated by:

"XXXXX ONLY"
"NOT USED ON XXXX"

"Make/Obtain Locally" — Indicates that the part can be purchased at any hardware shop or made out of available items. Examples include battery cables, shims, and certain washers and nuts.

"Not Sold Separately" — Indicates that an item cannot be purchased as a separate item and is either part of an assembly/kit that can be purchased, or is not available for sale through Multiquip.

EM120 HYDRAULIC MIXER

1 to 3 units

Qty.	P/N	Description
6	491010	LATCH KIT, CABINET
1	EM200293B	PADDLE ARM, TOW END
1	EM200294B	PADDLE ARM CTR. TOW END
1	EM200295B	PADDLE ARM CTR. ENG END
1	EM200296B	PADDLE ARM, ENGINE END
1	EM200212	SIDE WIPER, RUBBER
1	EM200213	END WIPER, RUBBER
1	EM203432	SIDE SCRAPER BLADE
1	EM203433	END SCRAPER BLADE
4	EM200297	U-BOLT
3	EM200863	BLADE KIT, RUBBER
36	EM200301	PACKING RING
3	8051	FILTER, HYDRAULIC

NOTICE

Part numbers on this Suggested Spare Parts list may supersede/replace the part numbers shown in the following parts lists.

HONDA GX390U1QA2 GASOLINE ENGINE

1 to 3 units

3	9807955876	SPARK PLUG
1	17620Z4H020	TANK CAP
3	17210ZE2822	AIR CLEANER ELEMENT
2	17218ZE2821	FILTER OUTER
1	28462ZE2W11	ROPE, RECOIL

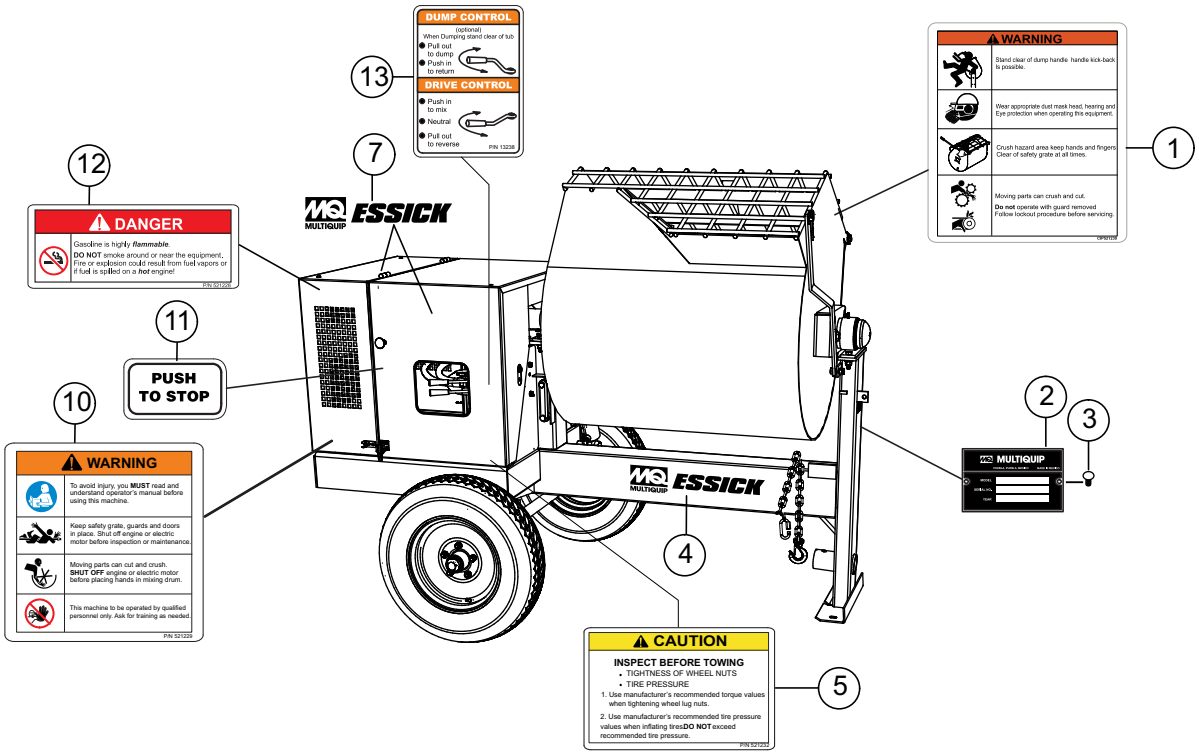
DUMP CONTROL
(optional)
When Dumping stand clear of tub
Pull out to dump
Push in to return
DRIVE CONTROL
Push in to mix
Neutral
Pull out to reverse
P/N 13238
WARNING
Stand clear of dump handle handle kick-back is possible.
Wear appropriate dust mask head, hearing and Eye protection when operating this equipment.
Crush hazard area keep hands and fingers Clear of safety grate at all times.
Moving parts can crush and cut.
Do not operate with guard removed
Follow lockout procedure before servicing.
DANGER
Gasoline is highly flammable.
DO NOT smoke around or near the equipment. Fire or explosion could result from fuel vapors or if fuel is spilled on a hot engine!
P/N 521229
PUSH TO STOP
WARNING
To avoid injury, you MUST read and understand operator's manual before using this machine.
Keep safety grate, guards and doors in place. Shut off engine or electric motor before inspection or maintenance.
Moving parts can cut and crush. SHUT OFF engine or electric motor before placing hands in mixing drum.
This machine to be operated by qualified personnel only. Ask for training as needed.
P/N 521229
CAUTION
INSPECT BEFORE TOWING
• TIGHTNESS OF WHEEL NUTS
• TIRE PRESSURE
1. Use manufacturer's recommended torque values when tightening wheel lug nuts.
2. Use manufacturer's recommended tire pressure values when inflating tires DO NOT exceed recommended tire pressure.
P/N 521232
MULTIQUIP
ESSICK
1
2
3
4
5
7
10
11
12
13

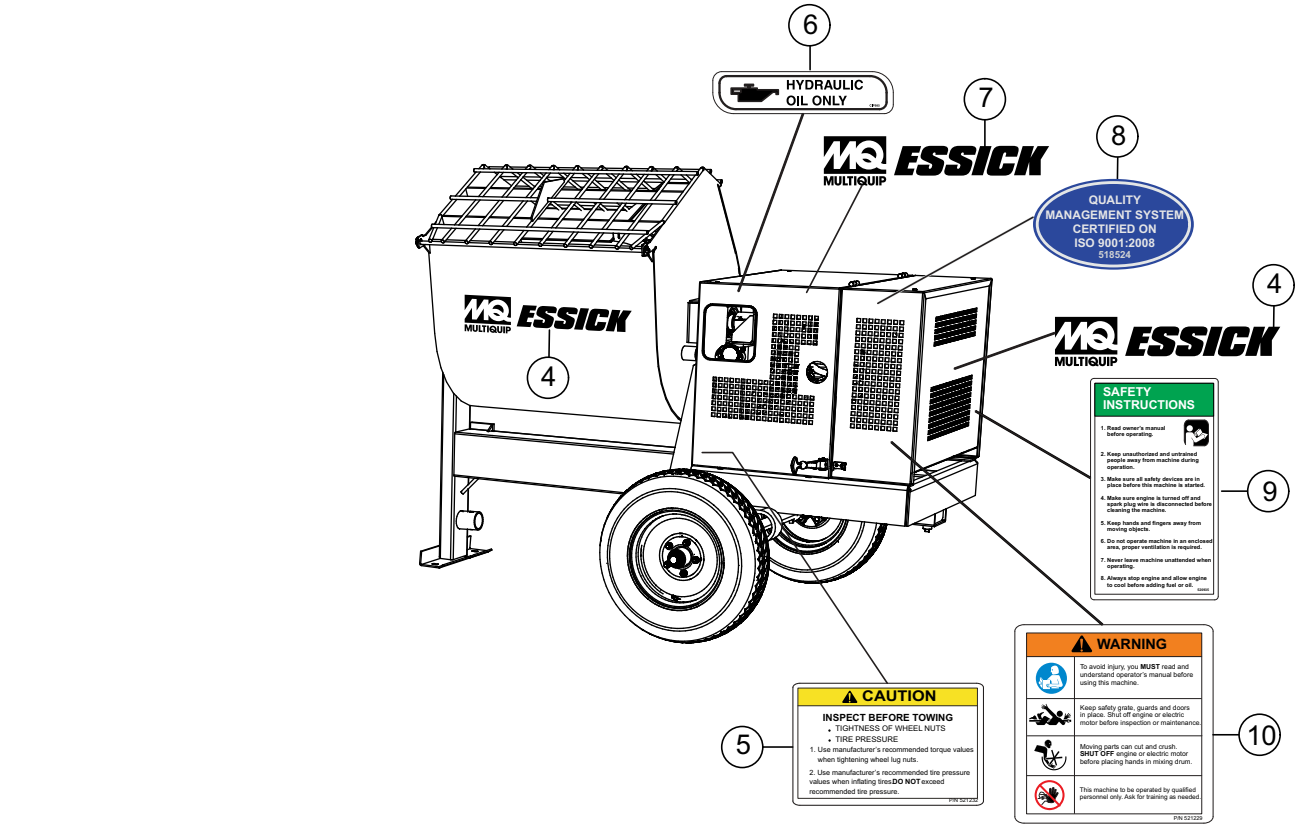
HYDRAULIC OIL ONLY
ESSICK
MULTIQUIP
QUALITY MANAGEMENT SYSTEM CERTIFIED ON ISO 9001:2008 518524
SAFETY INSTRUCTIONS
1. Read owner's manual before operating.
2. Keep unauthorized and untrained people away from machine during operation.
3. Make sure all safety devices are in place before this machine is started.
4. Make sure engine is turned off and spark plug wire is disconnected before cleaning the machine.
5. Keep hands and fingers away from moving objects.
6. Do not operate machine in an enclosed area, proper ventilation is required.
7. Never leave machine unattended when operating.
8. Always stop engine and allow engine to cool before adding fuel or oil.
WARNING
To avoid injury, you MUST read and understand operator's manual before using this machine.
Keep safety grate, guards and doors in place. Shut off engine or electric motor before inspection or maintenance.
Moving parts can cut and crush. SHUT OFF engine or electric motor before placing hands in mixing drum.
This machine to be operated by qualified personnel only. Ask for training as needed.
P/N 521229
CAUTION
INSPECT BEFORE TOWING
• TIGHTNESS OF WHEEL NUTS
• TIRE PRESSURE
1. Use manufacturer's recommended torque values when tightening wheel lug nuts.
2. Use manufacturer's recommended tire pressure values when inflating tires DO NOT exceed recommended tire pressure.
P/N 521232
4
5
6
7
8
9
10

NAMEPLATE AND DECALS ASSY.

NO.	PART NO.	PART NAME	QTY.	REMARKS
1	521230	DECAL; WARNING, PREVENT ACCIDENTS	1	
2		NAMEPLATE	1	CONTACT MQ PARTS DEPT.
3	491757	RIVET, ID PLATE	2	
4	510883	DECAL; MQ ESSICK (LARGE)	3	
5	521232	DECAL; CAUTION INSPECT BEFORE TOW	2	
6	985	DECAL; PLASTIC HYDRAULIC OIL ONLY	1	
7	510891	DECAL; MQ ESSICK (SMALL)	2	
8	518524	DECAL; ISO 9001:2000 EXPORT	1	
9	520935	DECAL; SAFETY INSTRUCTIONS	1	
10	521229	DECAL; WARNING, BODILY INJURY	2	
11	948630	DECAL; PUSH TO STOP	1	
12	521228	DECAL; DANGER, NO SMOKING	2	
13	13238	DECAL; DUMP/DRIVE CONTROLS	1	

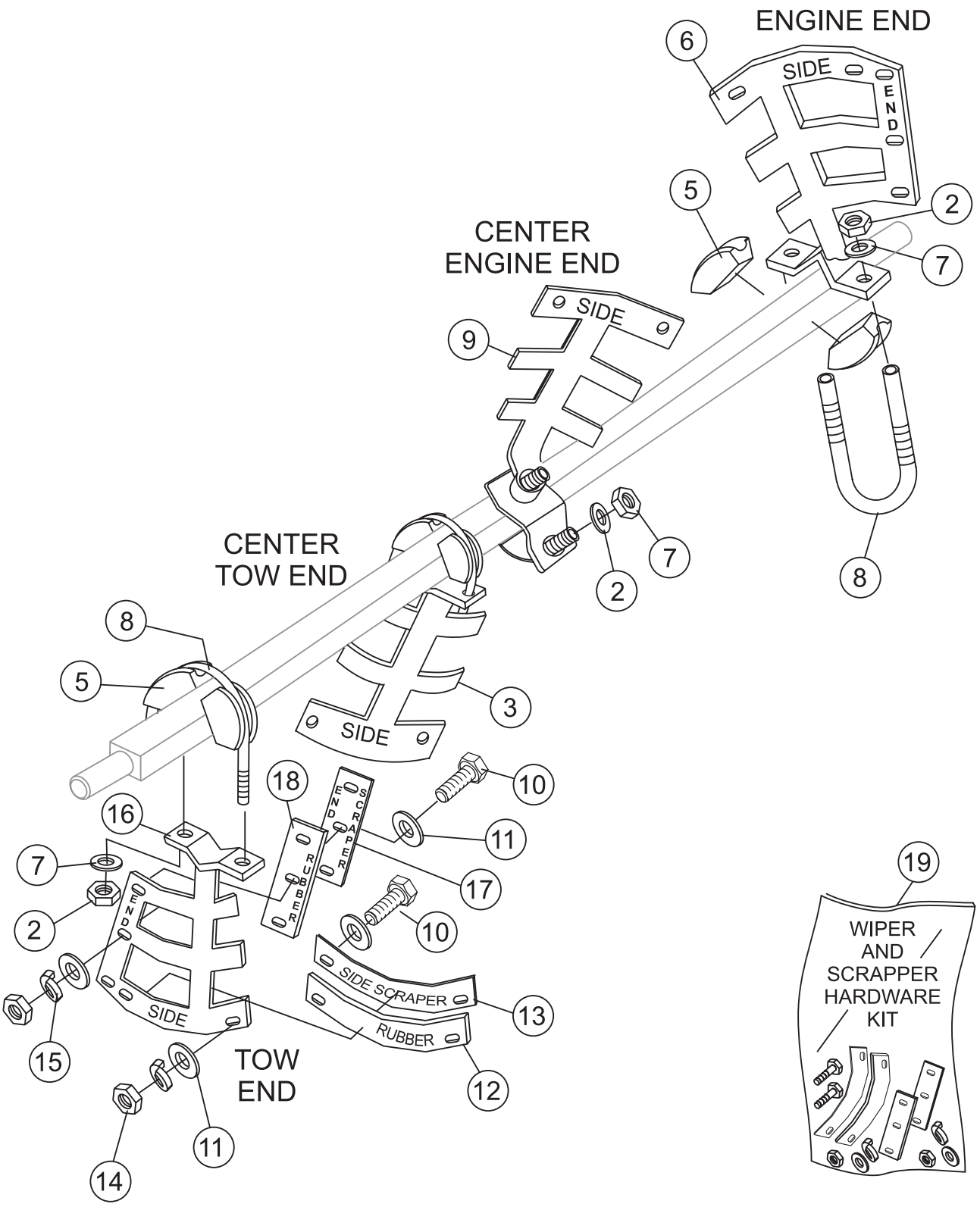
ENGINE END
SIDE
END
CENTER
ENGINE END
SIDE
CENTER
TOW END
SIDE
END
SIDE
SCRAPER
RUBBER
SIDE SCRAPER
RUBBER
TOW
END
WIPER
AND
SCRAPPER
HARDWARE
KIT
1
2
3
4
5
6
7
8
9
10
11
12
13
14
15
16
17
18
19

PADDLE BLADES ASSY.

NO.	PART NO.	PART NAME	QTY.	REMARKS
2	492584	NUT, LOCK 1/2" DIA. NC	8	
3	EM200294B	PADDLE ARM CENTER (TOW END)	1	
5	EM200292	INSERT, PADDLE ARM	8	REPLACES P/N 200292
6	EM200296B	PADDLE ARM, ENGINE END	1	
7	6109170	WASHER, FLAT 1/2"	8	REPLACES P/N 504322
8	EM200297	U-BOLT	4	REPLACES P/N 200297
9	EM200295B	PADDLE ARM CENTER (ENGINE END)	1	
10$	2105162	SCREW HHC	14	REPLACES P/N 492367
11$	EM923023	WASHER, FLAT 5/16"	28	REPLACES P/N 49259
12$	EM200212	SIDE WIPER, RUBBER	4	
13$	EM203432	SIDE SCRAPER BLADE	4	
14$	2105164	NUT HEX 5/16" DIA. NC	14	REPLACES P/N 492553
15$	EM923343	WASHER, LOCK 5/16"	14	REPLACES P/N 492623
16	EM200293B	PADDLE ARM, TOW END	1	
17	EM203433	END SCRAPER BLADE	2	
18	EM200213	END WIPER, RUBBER	2	
19	EM200863	KIT, RUBBER BLADES, SCRAPERS & HDW	1	INCLUDES ITEMS W/$

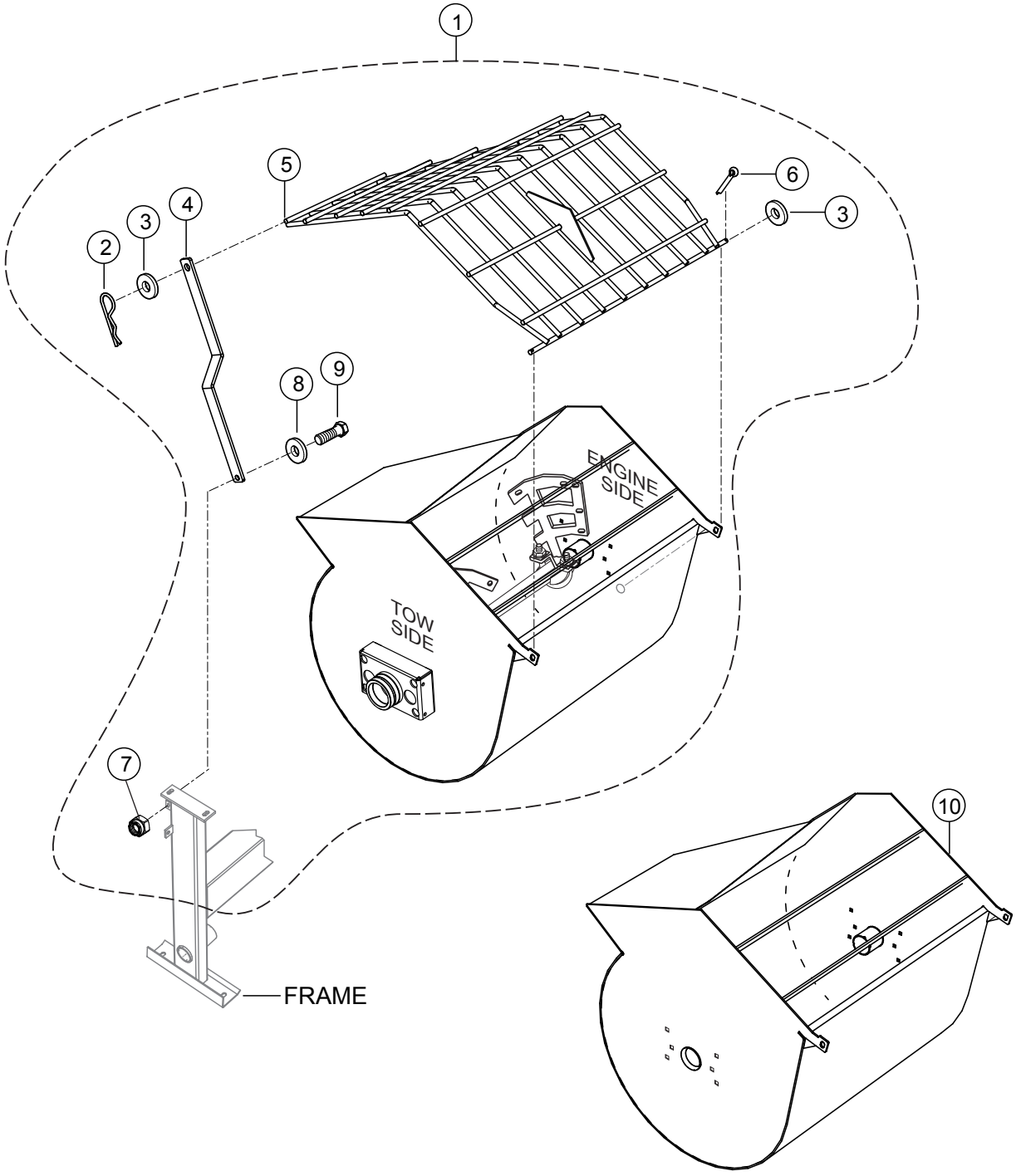
1
2
3
4
5
6
3
8
9
ENGINE SIDE
TOW SIDE
7
10
FRAME

DRUM AND SHAFT ASSY.

NO.	PART NO.	PART NAME	QTY.	REMARKS
1	521678	DRUM AND SHAFT ASSY.	1	INCLUDES ITEMS W/$
2$	925191	PIN, COTTER 3/16"	1	
3$	6109170	WASHER, FLAT 1/2" DIA.	3	REPLACES P/N 49260
4$	13276	BAR, GRATE OPENING	1	
5$	EM203449	DRUM GRILL	1	
6$	EM924015	PIN, COTTER	2	REPLACES P/N 505070
7$	492584	NUT, NYLOC 1/2" DIA NC	1	
8$	6109170	WASHER, FLAT 1/2" DIA.	1	REPLACES P/N 492600
9$	EM963692	BOLT, 1/2"UNC X 1-1/2"	1	REPLACES P/N 492394
10	521676	DRUM 12. CU. FT	1	DRUM ONLY

PADDLE SHAFT ASSY.

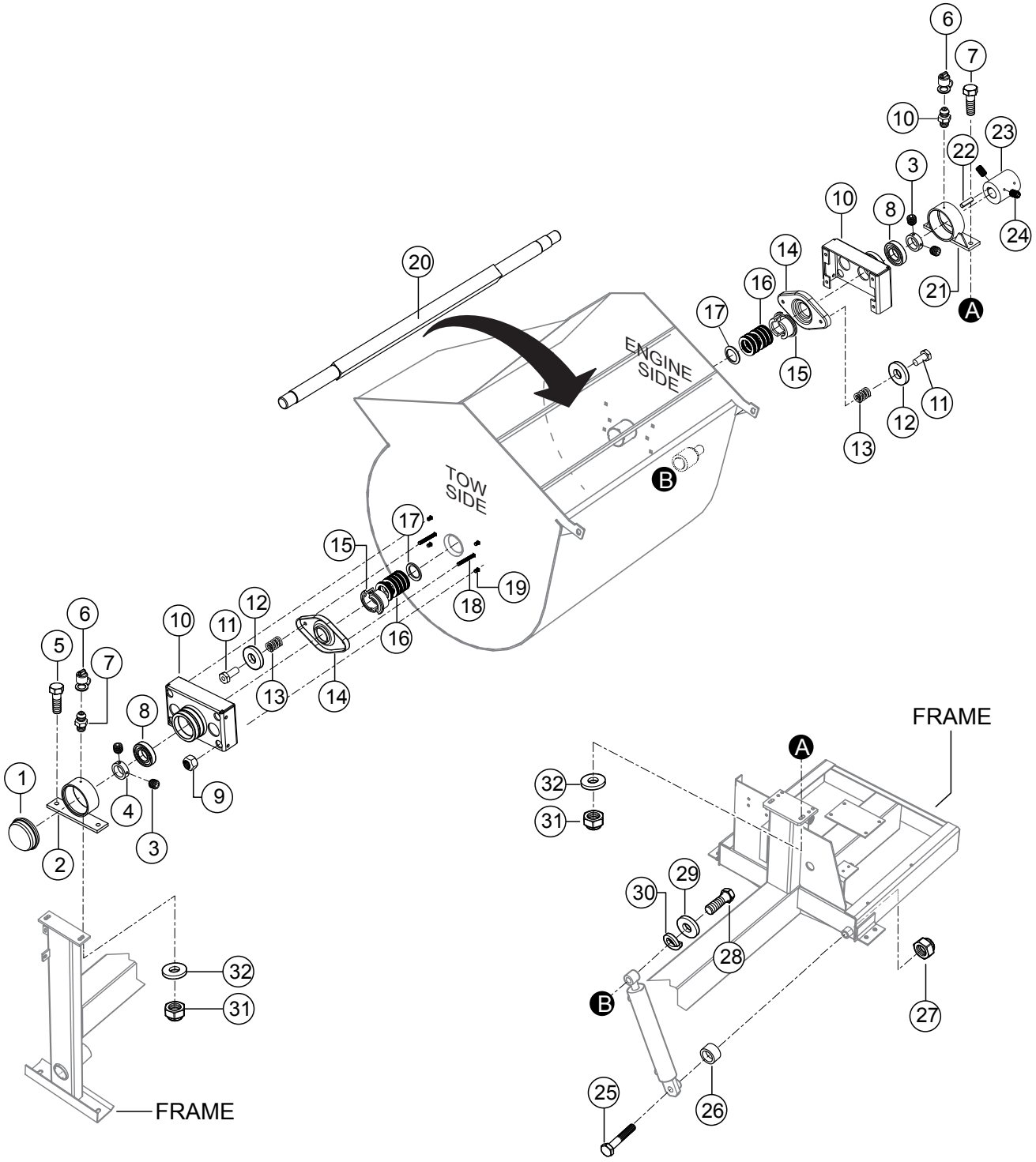

PADDLE SHAFT ASSY.

NO.	PART NO.	PART NAME	QTY.	REMARKS
1	3249	CAP, DUST	1	
2	521674	BRACKET, FRONT	1	
3	EM703	SCREW, ALLEN 3/8"	4	REPLACES P/N 492470
4	EM200018	COLLAR, PADDLE SHAFT	2	
5	492396	BOLT 1/2" NC X 2" G5	4	
6	491008	GREASE CAP FITTING	2	
7	EM916019	FITTING GREASE	2	REPLACES P/N 491705
8	EM902153	BEARING	2	REPLACES P/N 902153
9	EM969012	NUT, NYLOC 3/8"	8	REPLACES P/N 505066
10	EM201648	DRUM HEAD WELDMENT	2	
11	EM200287	ADJUSTING NUT	4	REPLACES P/N 200287
12	0401450160	WASHER, FLAT 5/8"	4	REPLACES P/N 492602
13	507844	SPRING COMPRESSOR	4	
14	EM200288	PLATE, PACKING GLAND PRESSURE	2	
16	EM200301	RING, SHAFT PACKING	12	
15	EM200285	GLAND, PACKING, HALF	4	
16	EM200303	FOLLOWER, PACKING RING	2	
18	EM200286	BOLT, CARRAGE	4	REPLACES P/N 505065
19	17985-008	BOLT, CARRIAGE	8	REPLACES P/N 505064
20	521675	PADDLE SHAFT	1	
21	521673	BRACKET, REAR	1	
22	EM502727	KEY, SQUARE 5/16 X 1-3/8"	1	
23	514235	COUPLING HYDRAULIC MOTOR	1	
24	492468	SCREW SET 5/16"	2	
25	511526	SCREW, HHCS 1" NC X 8	1	
26	13286	SPACER, LOWER DUMP CYLINDER	1	
27	511495	NUT, LOCK 1" NC	1	
28	EM963610	CAP SCREW	1	REPLACES P/N 492375
29	520957	WASHER, 3/8" FLAT	1	
30	0166 A	WASHER LOCK 3/8" DIA.	1	REPLACES P/N 492624
31	492584	NUT, NYLOC 1/2" DIA. NC	4	
32	EM621	WASHER, 1/2" SPECIAL	4	REPLACES P/N 621

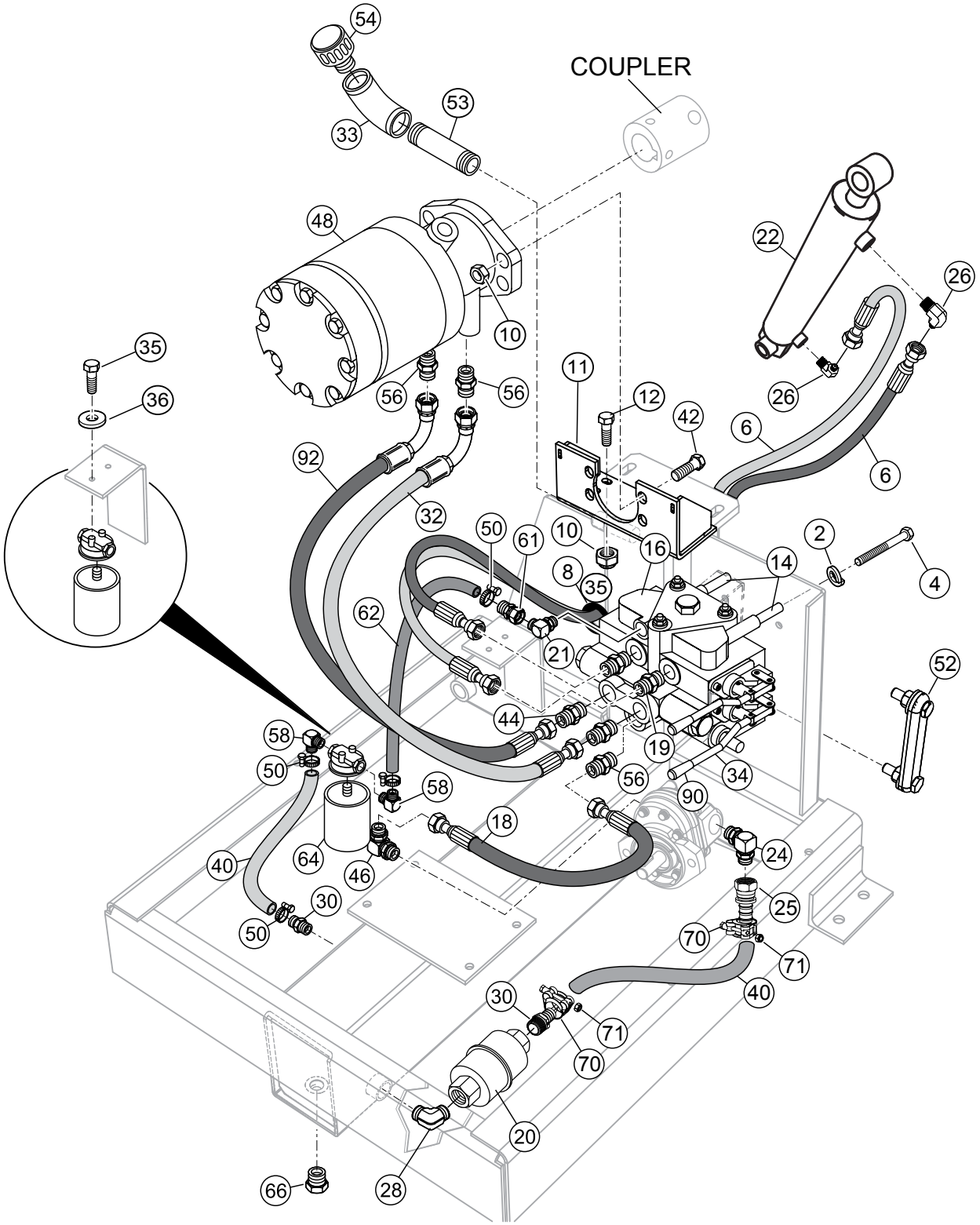
COUPLER
54
53
33
48
10
22
26
26
35
36
56
56
11
12
42
6
6
92
32
50
61
10
16
8
35
2
4
14
62
21
52
44
19
34
58
50
56
90
58
18
64
46
24
40
30
50
25
70
71
40
30
71
70
20
66
28

NO.	PART NO.	PART NAME	QTY.	REMARKS
2	0166 A	WASHER LOCK 3/8" DIA.	4	REPLACES P/N 492624
4	503117	BOLT 3/8" NC X 3" G5	3	
6	13198	HOSE, ASM, DUMP CYL, 36"	2	
8	13212	GROMMET, 1-1/4" ID	1	
10	492584	NUT, NYLOC 1/2" DIA. NC	8	
11	804032	BRACKET	1	
12	492395	BOLT, 1/2"NC X 1-3/4" G5	4	
14	515251	SPACER	3	
16	EM34585	DIRECTIONAL CONTROL VALVE	1	
18	13196	HOSE, PUMP OUTPUT, 21"	1	
19	511845	FITTING	2	
20	13210	STRAINER, IN LINE	1	
21	515219	FITTING, 90°	1	
22	3327	CYLINDER, DUMP	1	
24	EM25459	ELBOW 3/4"-90°	1	
25	511847	FITTING	1	
26	3369	FITTING	2	
28	13219	FITTING, 90°	1	
30	3220	FITTING, STR 12BARB X 3/4MP	2	
32	13243	HOSE, MOTOR, 17", W/90° FITTING	1	
33	510263	FITTING, 90° STRAIGHT ELBOW	1	
34	13225	HANDLE, DRIVE/DUMP VALVE CONTROL	2	
35	492356	BOLT 1/4" X 3/4"	2	
36	2101402	WASHER, LOCK 1/4" DIA.	2	REPLACES P/N 492622
40	13380	HOSE, 3/4"ID X 18-1/2	1	
42	492396	BOLT, 1/2"NC X 2"	4	
44	16587	FITTING	2	REPLACES P/N 3314
46	3322	FITTING, 90°	1	
48	34570	MOTOR, HYDRAULIC	1	
50	506207	CLAMP, HOSE	4	
52	18052	OIL, SIGHT GAUGE	1	
53	511691	FITTING, STR	1	
54	3353	CAP, FILLER/BREATHER	1	
56	3365	FITTING, STR	3	
58	3367	FITTING, 90°	2	
61	511847	FITTING, STR	1	
62	3462	HOSE, .75 ID, 16.5 LONG	1	
64	8051	FILTER, HYDRAULIC OIL	1	
66	506094	PLUG 1/2"NPT GALVANIZED	1	
70	804371	CLAMP, 1-1/4"	2	
71	DULT100078J	NUT M6, NYLOC G8	2	
90	3407	KNOB	2	
92	13242	HOSE W/90° FITTING	1	

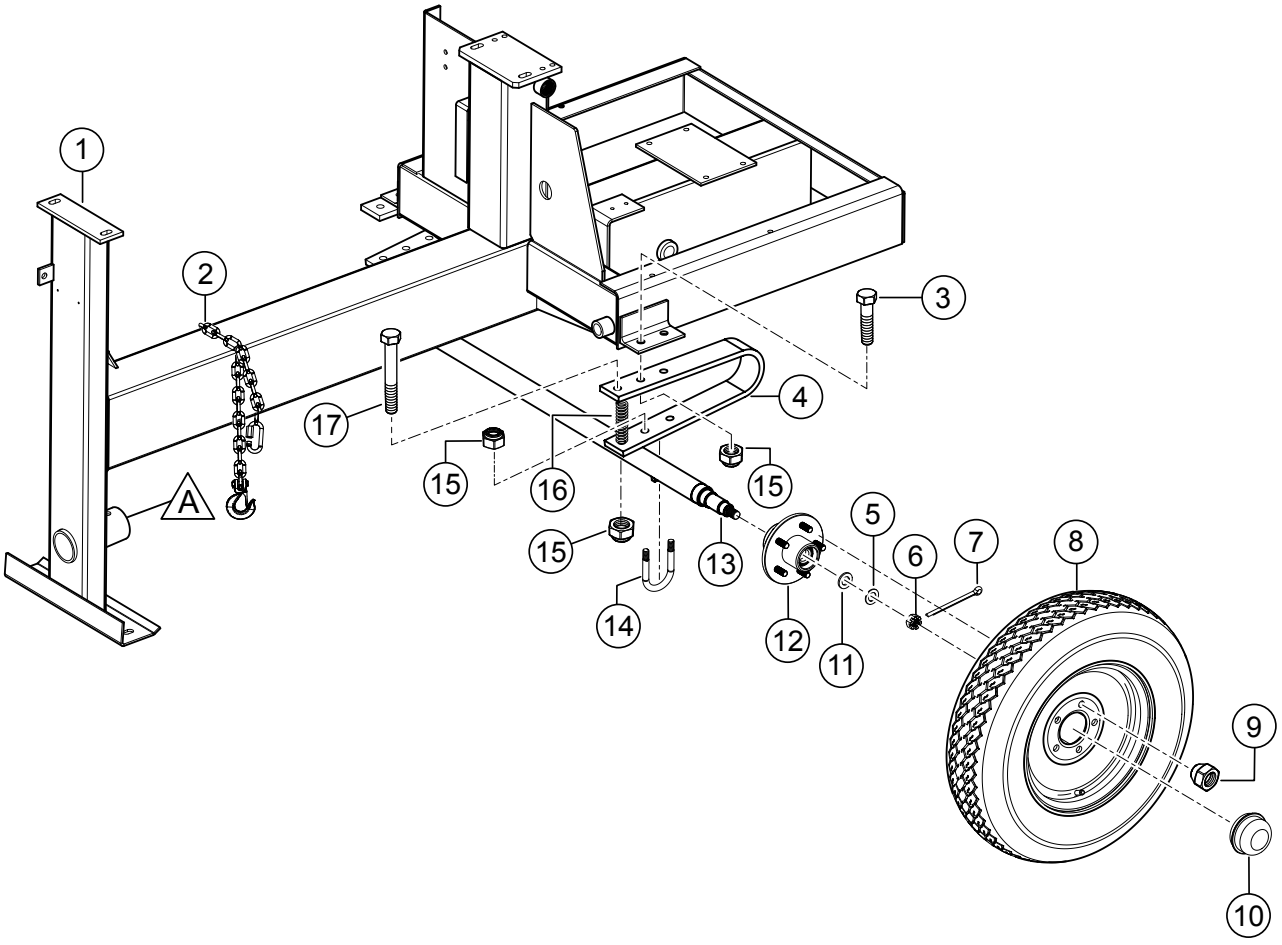

NOTES:
A OPTIONAL TOW BARS

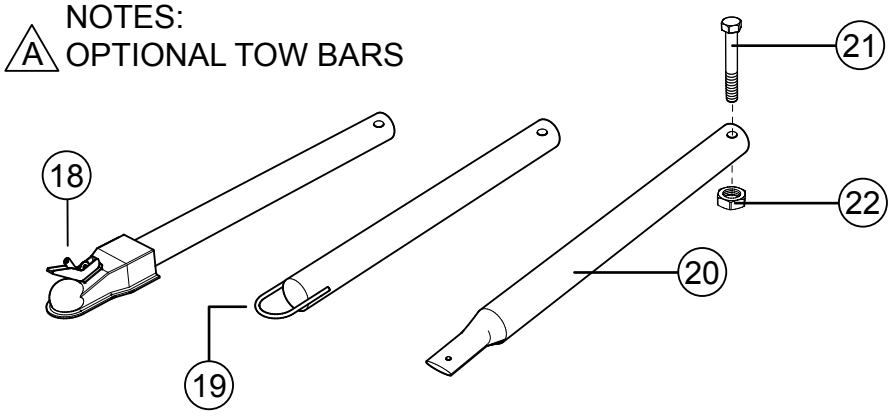

NO.	PART NO.	PART NAME	QTY.	REMARKS
1	13365	CHASSIS ASSY.	1	
2	501078	CHAIN SET	1	
3	EM963692	BOLT 1/2"UNC X 1-1/2"	4	REPLACES P/N 492394
4	3018	SPRING, LEAF	2	
5	507444	WASHER, FLAT 3/4"	2	
6	492534	NUT, CASTLE 3/4"	2	
7	EM924008	PIN, COTTER 1/8" X 1-1/2"	2	REPLACES P/N 491688
8	516477	WHEEL/TIRE ASSY.	2	
9	29194	LUG NUT	10	
10	3469	DUST CAP	2	
11	504708	WASHER, FLAT 3/4"	2	
12	EM941277	HUB COMPLETE, 5 LUGS	2	
13	511699	AXLE	1	
14	3028	U-BOLT, AXLE	2	
15	492584	NUT LOCK 1/2" DIA.	10	
16	3076	SPRING, AXLE	2	
17	3043	BOLT 1/2" X 6" G5	2	REPLACES P/N 510721
18	HBC-1	TWO BAR (BALL HITCH 2-IN.)	1	CONTACT SALES
19	HLC-1	TOW BAR (LOOP)	1	CONTACT SALES
20	HPC-1	TOW BAR (1" PIN)	1	CONTACT SALES

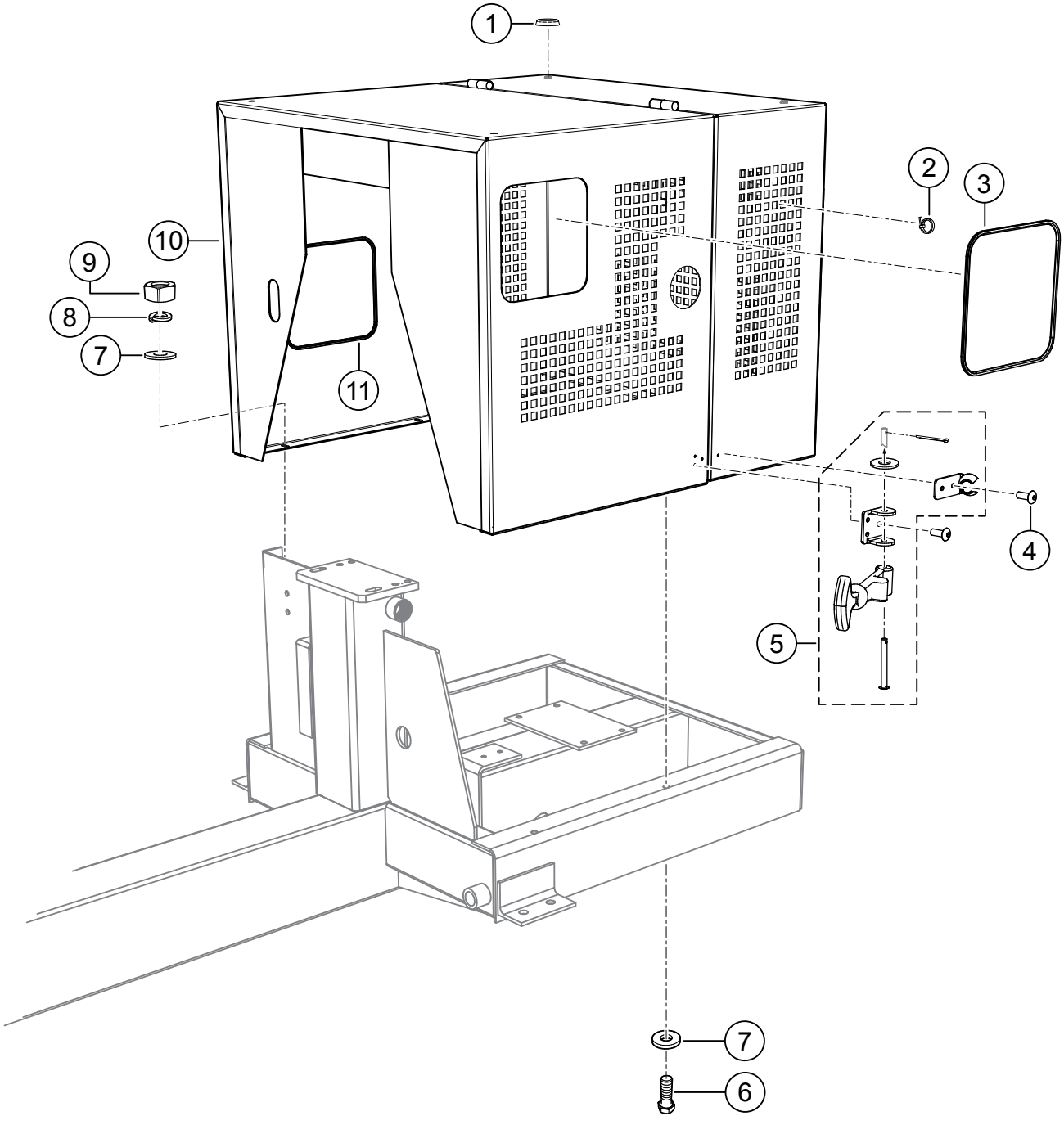
1
2
3
10
9
8
7
11
4
5
7
6

NO.	PART NO.	PART NAME	QTY.	REMARKS
1	EM505186	CUSHION RUBBER	4	REPLACES P/N 505186
2	EM491028	WRAP, CABLE TIE	1	REPLACES P/N 491028
3	511713	WEATHER STRIPPING SMALL ACCESS	1	
4	512881	RIVET	10	REPLACES P/N 503723
5	491010	LATCH KIT, CABINET	2	
6	EM963610	BOLT 3/8"	4	REPLACES P/N 492376
7	3019092	WASHER, FLAT 3/8"	8	REPLACES P/N 492598
8	0166A	WASHER, LOCK 3/8"	4	REPLACES P/N 492624
9	1456	NUT, HEX 3/8"	4	REPLACES P/N 492554
10	511580	CABINET, ENGINE STEEL	1	
11	518691	WEATHER STRIPPING LARGE ACCESS	1	

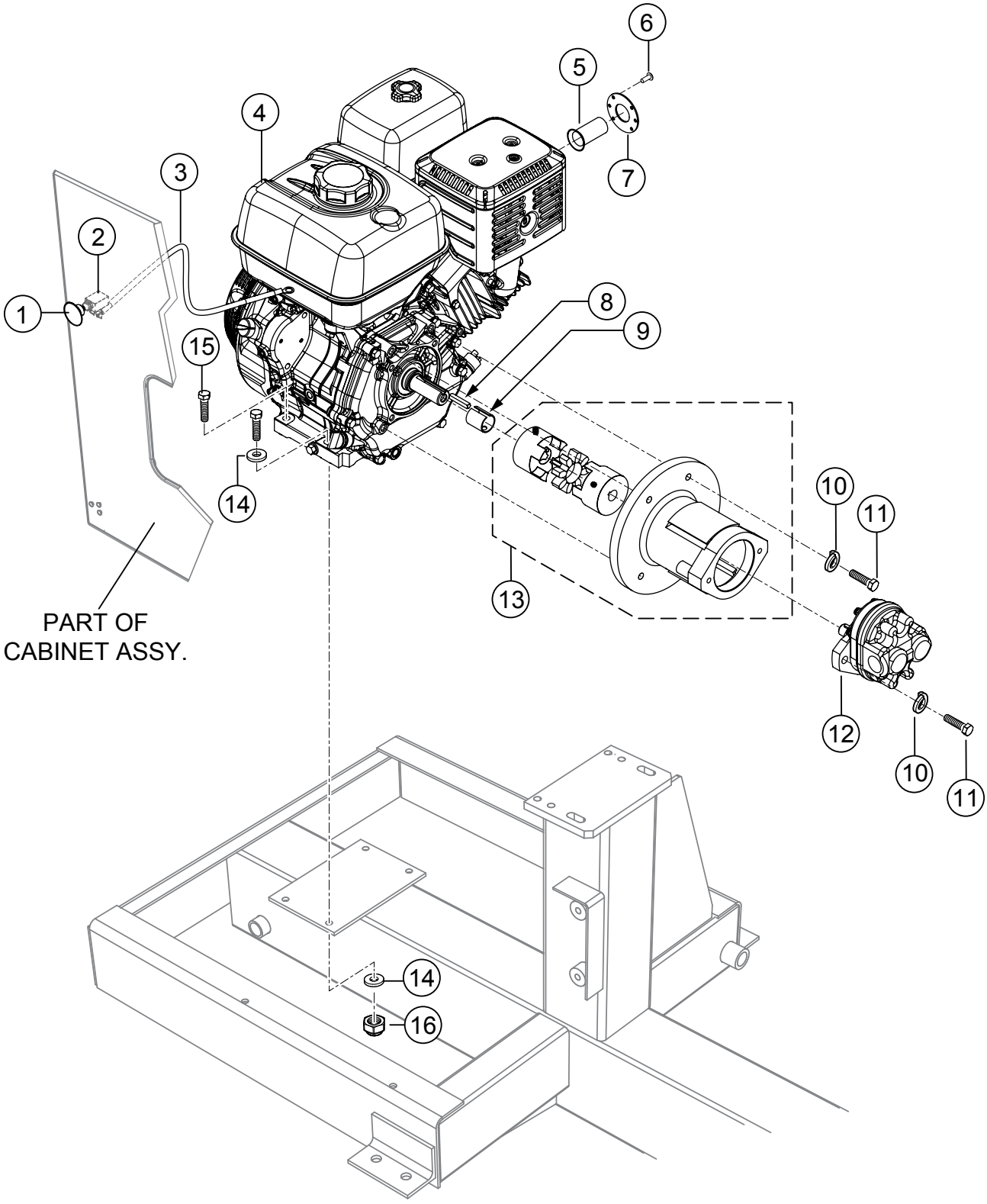
6
5
4
7
3
2
1
8
9
15
14
10
11
13
PART OF
CABINET ASSY.
12
10
11
14
16

NO.	PART NO.	PART NAME	QTY.	REMARKS
1	29174-001	KNOB, MUSHROOM	1	
2	29173-001	SWITCH, PUSH PULL W/OUT KNOB	1	
3	510573	HARNESS CABLE, ENGINE	1	
4	3364	ENGINE, HONDA 11.7HP, GX390U1QA2	1	
5	203148	TUBE, EXHAUST	1	
6	491757	RIVET	4	
7	203123	FLANGE, EXHAUST PIPE	1	
8	90745ZE2600	KEY, SQUARE 6.3X6.43X43	1	
9	EM203040	ENGINE SHAFT SLEEVE	1	
10	0166A	WASHER, LOCK 3/8" DIA.	6	REPLACES P/N 492624
11	EM963610	BOLT 3/8"	6	REPLACES P/N 492376
12	13374	PUMP, EATON	1	
13	516282	COUPLING ASSY.	1	
14	3019092	WASHER, FLAT 3/8"	6	REPLACES P/N 492598
15	492379	SCREW, CAP 3/8"	4	
16	EM969013	NUT 3/8" NC NYLOC G8	4	REPLACES P/N 492583

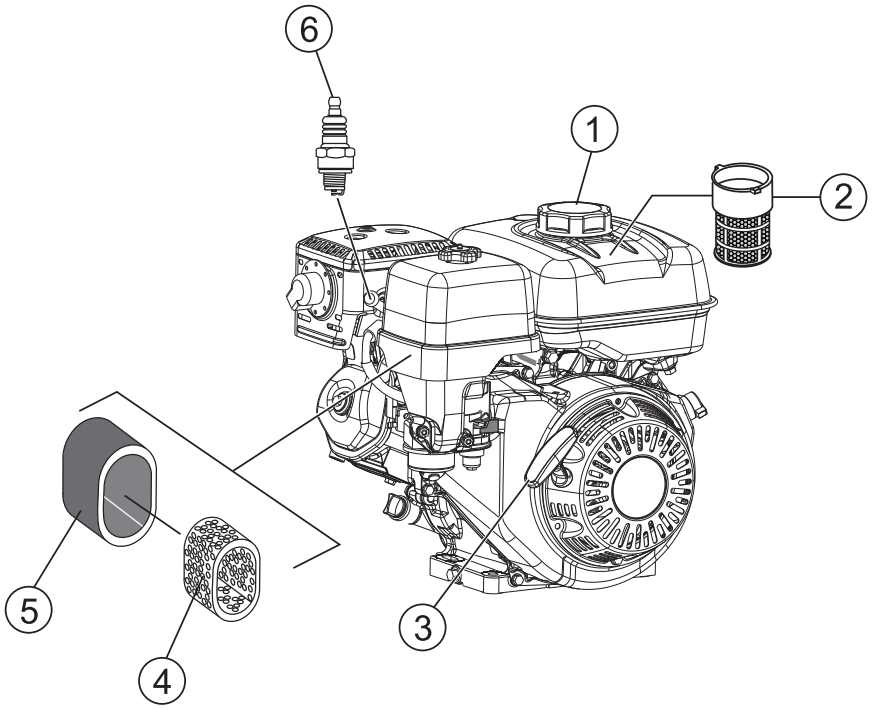
6
1
2
5
4
3

NO.	PART NO.	PART NAME	QTY.	REMARKS
1	17620Z0T305	TANK CAP, CHROME PLATED	1	
2	17672ZE2W01	FUEL FILTER	1	
3	28462ZE3W01	ROPE, RECOIL	1	
4	17210ZE3010	AIR CLEANER ELEMENT	1	
5	17218ZE3000	FILTER OUTER	1	
6	9807955846	SPARK PLUG, BPR5ES (NGK)	1	

OPERATION AND PARTS MANUAL

HERE'S HOW TO GET HELP

PLEASE HAVE THE MODEL AND SERIAL NUMBER ON-HAND WHEN CALLING

UNITED STATES

Multiquip Inc.

(310) 537- 3700
6141 Katella Avenue Suite 200
Cypress, CA 90630
E-MAIL: mq@multiquip.com
WEBSITE: www.multiquip.com

CANADA

Multiquip

(450) 625-2244
4110 Industriel Boul.
Laval, Quebec, Canada H7L 6V3
E-MAIL: infocanada@multiquip.com

UNITED KINGDOM

Multiquip (UK) Limited Head Office

0161 339 2223
Unit 2, Northpoint Industrial Estate,
Globe Lane,
Dukinfield, Cheshire SK16 4UJ
E-MAIL: sales@multiquip.co.uk

© COPYRIGHT 2019, MULTIQUIP INC.

Multiquip Inc, the MQ logo are registered trademarks of Multiquip Inc. and may not be used, reproduced, or altered without written permission. All other trademarks are the property of their respective owners and used with permission.

This manual MUST accompany the equipment at all times. This manual is considered a permanent part of the equipment and should remain with the unit if resold.

The information and specifications included in this publication were in effect at the time of approval for printing. Illustrations, descriptions, references and technical data contained in this manual are for guidance only and may not be considered as binding. Multiquip Inc. reserves the right to discontinue or change specifications, design or the information published in this publication at any time without notice and without incurring any obligations.

Your Local Dealer is:

MULTIQUIP®