OPERATION MANUAL

MULTIQUIP®

Mikasa SERIES

MODEL MTR40HF

TAMPING RAMMER

(HONDA GX100RTKRB6 GASOLINE ENGINE)

Revision #3 (01/06/23)

To find the latest revision of this publication or associated parts manual, visit our website at:
www.multiquip.com

THIS MANUAL MUST ACCOMPANY THE EQUIPMENT AT ALL TIMES.


WARNING
CANCER &
REPRODUCTIVE HARM
www.P65Warnings.ca.gov
P/N 38707

MTR40HF Rammer

Proposition 65 Warning 2
Safety Information 5–8
Dimensions 9
Specifications 10
General Information 11
Components 12
Basic Engine 13
Transporting And Lifting 14
Inspection 15–16
Operation 17–19
Storage 19
Maintenance 20–22
Troubleshooting 23–25

NOTICE

Specifications and part numbers are subject to change without notice.

Do not operate or service the equipment before reading the entire manual. Safety precautions should be followed at all times when operating this equipment. Failure to read and understand the safety messages and operating instructions could result in injury to yourself and others.



SAFETY MESSAGES

The four safety messages shown below will inform you about potential hazards that could injure you or others. The safety messages specifically address the level of exposure to the operator and are preceded by one of four words: **DANGER, WARNING, CAUTION** or **NOTICE.**

SAFETY SYMBOLS

DANGER

Indicates a hazardous situation which, if not avoided, **WILL** result in **DEATH** or **SERIOUS INJURY.**

WARNING

Indicates a hazardous situation which, if not avoided, **COULD** result in **DEATH** or **SERIOUS INJURY.**

CAUTION

Indicates a hazardous situation which, if not avoided, **COULD** result in **MINOR** or **MODERATE INJURY.**

NOTICE

Addresses practices not related to personal injury.

Potential hazards associated with the operation of this equipment will be referenced with hazard symbols which may appear throughout this manual in conjunction with safety messages.

Symbol	Safety Hazard
	Lethal exhaust gas hazards
	Explosive fuel hazards
	Burn hazards
	Respiratory hazards
	Accidental starting hazards
	Eye and hearing hazards

GENERAL SAFETY

⚠ CAUTION

- **NEVER** operate this equipment without proper protective clothing, shatterproof glasses, respiratory protection, hearing protection, steel-toed boots and other protective devices required by the job or city and state regulations.



- **NEVER** operate this equipment when not feeling well due to fatigue, illness or when under medication.



- **NEVER** operate this equipment under the influence of drugs or alcohol.



- **ALWAYS** check the equipment for loosened threads or bolts before starting.
- **DO NOT** use the equipment for any purpose other than its intended purposes or applications.

NOTICE

- This equipment should only be operated by trained and qualified personnel 18 years of age and older.
- Whenever necessary, replace nameplate, operation and safety decals when they become difficult read.
- Manufacturer does not assume responsibility for any accident due to equipment modifications. Unauthorized equipment modification will void all warranties.
- **NEVER** use accessories or attachments that are not recommended by Multiquip for this equipment. Damage to the equipment and/or injury to user may result.
- **ALWAYS** know the location of the nearest **fire extinguisher.**



- **ALWAYS** know the location of the nearest **first aid kit.**



- **ALWAYS** know the location of the nearest phone or **keep a phone on the job site.** Also, know the phone numbers of the nearest **ambulance, doctor** and **fire department.** This information will be invaluable in the case of an emergency.

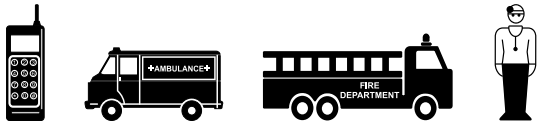

RAMMER SAFETY

⚠ DANGER

- **NEVER** operate the equipment in an explosive atmosphere or near combustible materials. An explosion or fire could result causing severe **bodily harm or even death.**



⚠ WARNING

- **NEVER** disconnect any **emergency or safety devices.** These devices are intended for operator safety. Disconnection of these devices can cause severe injury, bodily harm or even death. Disconnection of any of these devices will void all warranties.
- **DO NOT** use this machine on ground that is harder than the machine can handle, or for driving pilings or tamping rock beds. Furthermore, use of the machine on sloping ground, such as the side of an embankment, may make the machine unstable and can cause an accident. It can also result in premature machine wear due to uneven loads on the machine.

  Use the machine with confidence for tamping earth and sand, soil, gravel, and asphalt. **DO NOT** use the machine for other types of jobs.

⚠ CAUTION

- **NEVER** lubricate components or attempt service on a running machine.

NOTICE

- **ALWAYS** keep the machine in proper running condition.
- Fix damage to machine and replace any broken parts immediately.
- **ALWAYS** store equipment properly when it is not being used. Equipment should be stored in a clean, dry location out of the reach of children and unauthorized personnel.

ENGINE SAFETY

⚠ DANGER

- The engine fuel exhaust gases contain poisonous carbon monoxide. This gas is colorless and odorless, and can cause death if inhaled.
- The engine of this equipment requires an adequate free flow of cooling air. **NEVER** operate this equipment in any enclosed or narrow area where free flow of the air is restricted. If the air flow is restricted it will cause injury to people and property and serious damage to the equipment or engine.

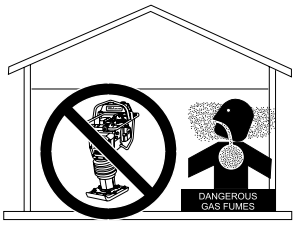

⚠ WARNING

- **DO NOT** place hands or fingers inside engine compartment when engine is running.
- **NEVER** operate the engine with heat shields or guards removed.
- **DO NOT** remove the engine oil drain plug while the engine is hot. Hot oil will gush out of the oil tank and severely scald any persons in the general area of the rammer.



⚠ CAUTION

- **NEVER** touch the hot exhaust manifold, muffler or cylinder. Allow these parts to cool before servicing equipment.



NOTICE

- **NEVER** run engine without an air filter or with a dirty air filter. Severe engine damage may occur. Service air filter frequently to prevent engine malfunction.
- **NEVER** tamper with the factory settings of the engine or engine governor. Damage to the engine or equipment can result if operating in speed ranges above the maximum allowable.



FUEL SAFETY

⚠ DANGER

- DO NOT add fuel to equipment if it is placed inside truck bed with plastic liner. Possibility exists of explosion or fire due to static electricity.

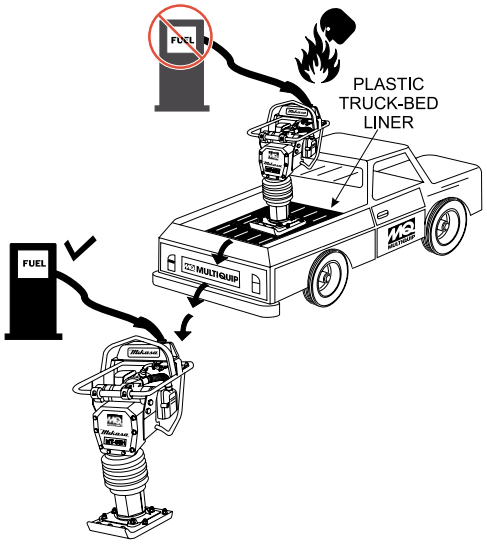

- **DO NOT** start the engine near spilled fuel or combustible fluids. Fuel is extremely flammable and its vapors can cause an explosion if ignited.
- **ALWAYS** refuel in a well-ventilated area, away from sparks and open flames.
- **ALWAYS** use extreme caution when working with **flammable** liquids.
- **DO NOT** fill the fuel tank while the engine is running or hot.
- **DO NOT** overfill tank, since spilled fuel could ignite if it comes into contact with hot engine parts or sparks from the ignition system.
- Store fuel in appropriate containers, in well-ventilated areas and away from sparks and flames.
- **NEVER** use fuel as a cleaning agent.
- **DO NOT** smoke around or near the equipment. Fire or explosion could result from fuel vapors or if fuel is spilled on a hot engine.



TRANSPORTING SAFETY

⚠ CAUTION

- NEVER allow any person or animal to stand underneath the equipment while lifting.

NOTICE

- Before lifting, make sure that the equipment parts (hook and vibration insulator) are not damaged and screws are not loose or missing.
- Always make sure crane or lifting device has been properly secured to the lifting bail (hook) of the equipment.
- **ALWAYS** shutdown engine before transporting.
- **NEVER** lift the equipment while the engine is running.
- Tighten fuel tank cap securely and close fuel cock to prevent fuel from spilling.
- Use adequate lifting cable (wire or rope) of sufficient strength.
- Use one point suspension hook and lift straight upwards.
- **DO NOT** lift machine to unnecessary heights.
- **ALWAYS** tie down equipment during transport by securing the equipment with rope.
- Never allow any person or animal to stand underneath the equipment while lifting.

ENVIRONMENTAL SAFETY

NOTICE

- Dispose of hazardous waste properly. Examples of potentially hazardous waste are used motor oil, fuel and fuel filters.



- **DO NOT** use food or plastic containers to dispose of hazardous waste.
- **DO NOT** pour waste, oil or fuel directly onto the ground, down a drain or into any water source.

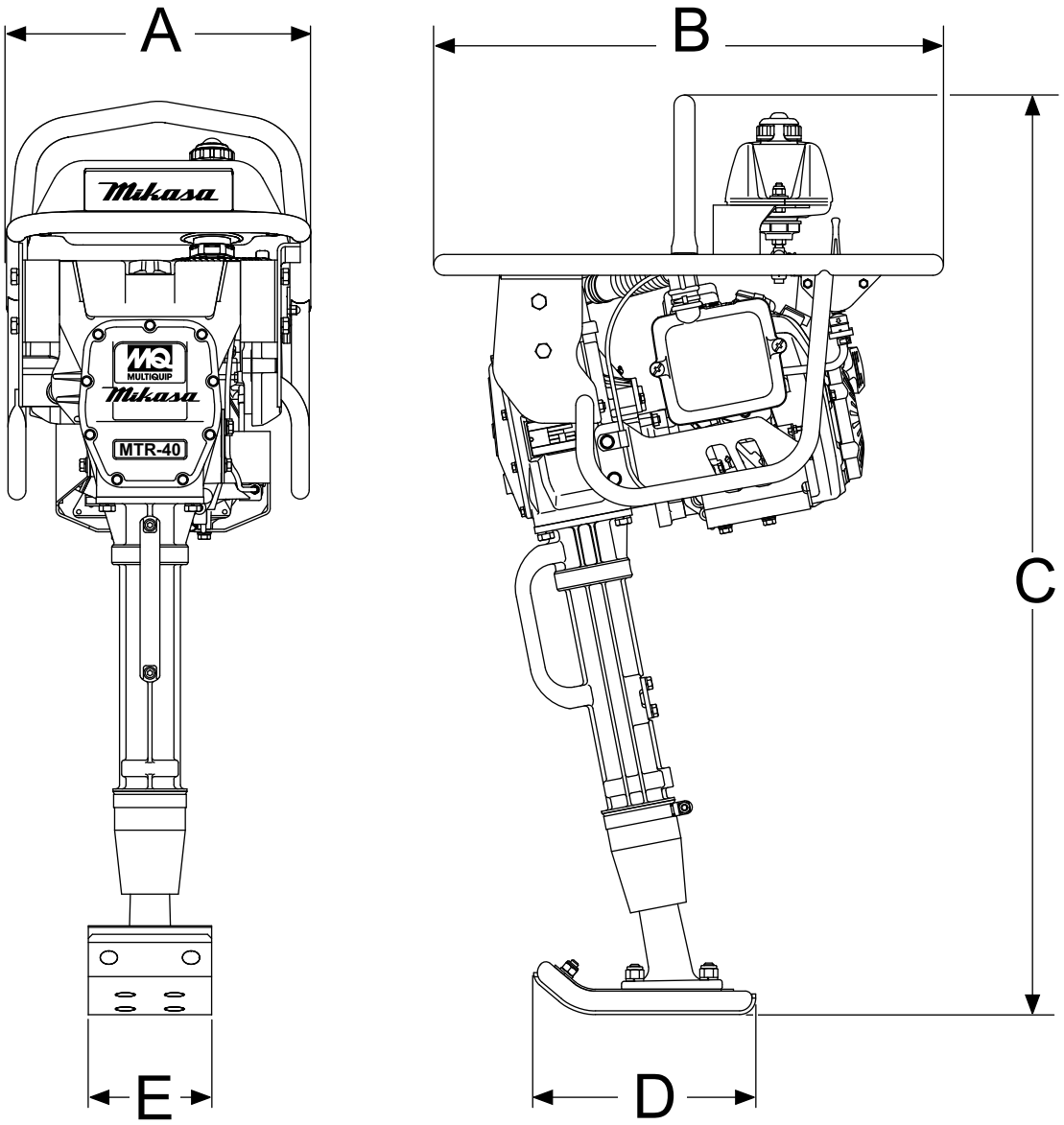

Table 1. Rammer Dimensions	
Reference Letter	Dimension in. (mm)
A	14.57 (370)
B	24.41 (620)
C	43.70 (1,110)
D	10.63 (270)
E	5.90 (150)

Table 2. Rammer Specifications	
Overall Height	43.70 in. (1,110 mm))
Overall Width	14.57 in. (370 mm)
Over Length	24.41 in. (620 mm)
Shoe Size (W x L)	5.9 x 10.6 in. (150 x 270 mm)
No. of Impacts	10.7 ~ 11.6 Hz (644 ~ 695 vpm)
Tamping Area	1,453 sq. ft. per hr (135 sq.m per hr)
Lubricant (Bearing/Spring)	Shell Stamina EP2 or High Temperature Grease
Fuel Tank Capacity	.5 gallon (2.0 Liters)
Impact Force	4.9 ~ 5.4 kN (500 ~ 550 kgf)
Clutch	Automatic Centrifugal
Travel Speed	30 fpm (9 mpm))
Stroke (Jump Height)	1.57~ 2.16 in. (40~55 mm)
Operating Weight	104 lbs. (47 kg)

Table 3. Engine Specifications	
Model	Honda GX100RTKRB6 Engine
Type	Air-Cooled 4 Stroke, Overhead camshaft, single cylinder gasoline engine
Piston Displacement	6.0 cu.in. (98 cc)
Max. Output	3.0 hp/3,600 rpm (2.2 KW)
Max. Governed Speed, No Load	3,800 - 4,100 rpm
Cooling System	Air-Cooled
Engine Oil Capacity	0.3 qt. (0.28 liters)
Fuel	Unleaded gasoline
Lubricant for Engine	Automobile Oil; Class SE or higher
Starting System	Recoil Starter
Spark Plug Type	NGK CR5HSB

The Multiquip MTR40HF tamping rammer is a powerful compacting tool capable of applying a tremendous force in consecutive impacts to a soil surface. Its applications include soil compacting for backfilling for gas pipelines, water pipelines and cable installation work.

The impact force of the rammer levels and uniformly compacts voids between soil particles to increase dry density.

Circular motion is converted to create impact force. This tamping rammer develops a powerful compacting force at the foot of the rammer. To maintain optimum performance, proper operation and service are essential.

This rammer is equipped with an air cooled, four- cycle gasoline engine. Transmission of the power takes place by increasing the engine speed to engage the centrifugal clutch.

The rammer uses zerk grease fittings to lubricate the spring cylinder and crankcase bearings. Lubricate these grease fittings as indicated in the maintenance section of this manual.

Before starting the rammer identify and understand the function of the controls.

This rammer is equipped with a lifting grip handle. Check the following before placing rammer into operation:

- Make sure that there is no damage to the bolts that secure the grip handle (Figure 1).

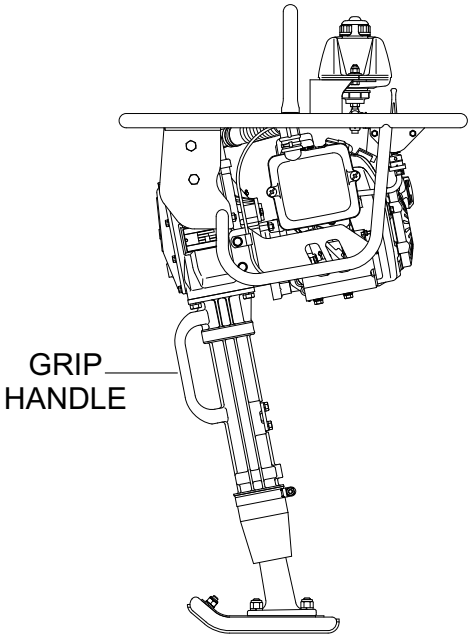

Figure 1. Rammer Handle Grip

- Make sure that there is no crack or breakage on grip handle.
- Make sure that there are no cracks or fissures on the handle surface. If there is any abnormality or damage, replace handle/grip with a new one.
- This grip handle is to be used to lift up the shoe part of the machine with the body laid down on the ground or truck bed.
- Use proper lifting techniques to avoid back injury. This grip handle is for manual lifting only.
- Do not use this grip handle as a rammer lift point. Use the lifting point on the top of the machine.

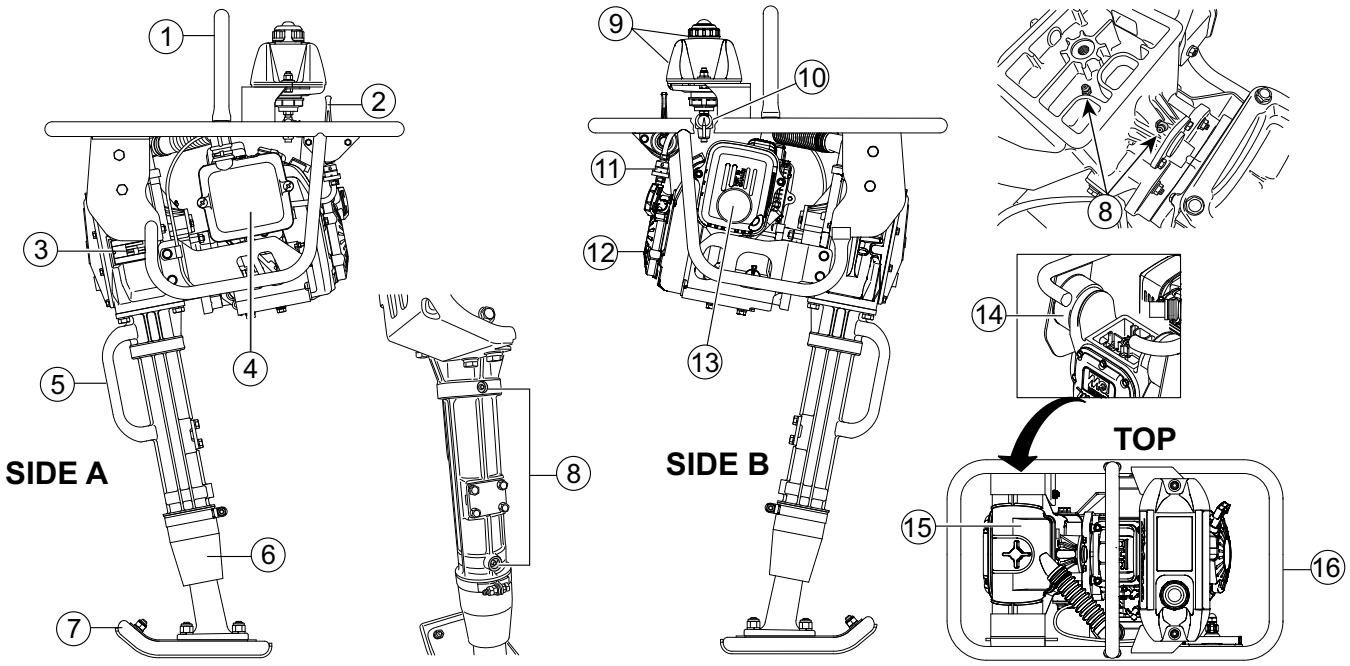

Figure 2. MTR40HF Rammer

Figure 2 shows the location of the controls and components for the MTR40HF Tamping Rammer. The functions of each control is described below:

1. **Center Lifting Point** — Connection point for a lifting hook or strap when lifting with a forklift, crane or other machinery.
2. **Throttle Lever** — Used to adjust engine speed (rpm). Move lever forward ***(SLOW)*** to reduce engine speed, move lever back toward operator ***(FAST***) to increase speed.
3. **Nameplate** — Displays information regarding the rammer.
4. **Engine Air Cleaner** — Prevents dirt (second stage) and other debris from entering the engine.
5. **Grip** — When transporting the rammer, carry it by gripping the handle.
6. **Dust Sleeve** — Prevents dust and debris from entering into the spring cylinder.
7. **Foot** — Laminated wood with tempered steel plate for superior shock absorption.
8. **Zerk Fittings (4)** — Lubricates main springs and crankcase bearings.
9. **Fuel Tank/Cap** — Remove this cap to add unleaded gasoline to the fuel tank. Make sure cap is tightened securely. **DO NOT** over fill.
10. **Fuel Shut-Off Valve** — Supplies fuel from the fuel tank to the engine. To begin fuel flow, move the fuel shut-off valve downward.
11. **In-Line Fuel Filter** — Prevents dirt and debris from entering the fuel system.
12. **Engine** — This unit uses a Honda GX100RTKRB6 gasoline engine. Reference Table 3 for detailed specifications.
13. **Muffler** — Used to reduce noise and emissions.
14. **Shock Absorber** — Reduces vibration due to the tamping action.
15. **Primary Air Cleaner** — Pre-cleans (first stage) dirt and other debris from entering the engine.
16. **Handle** — To operate rammer, GRIP handle firmly on both sides.

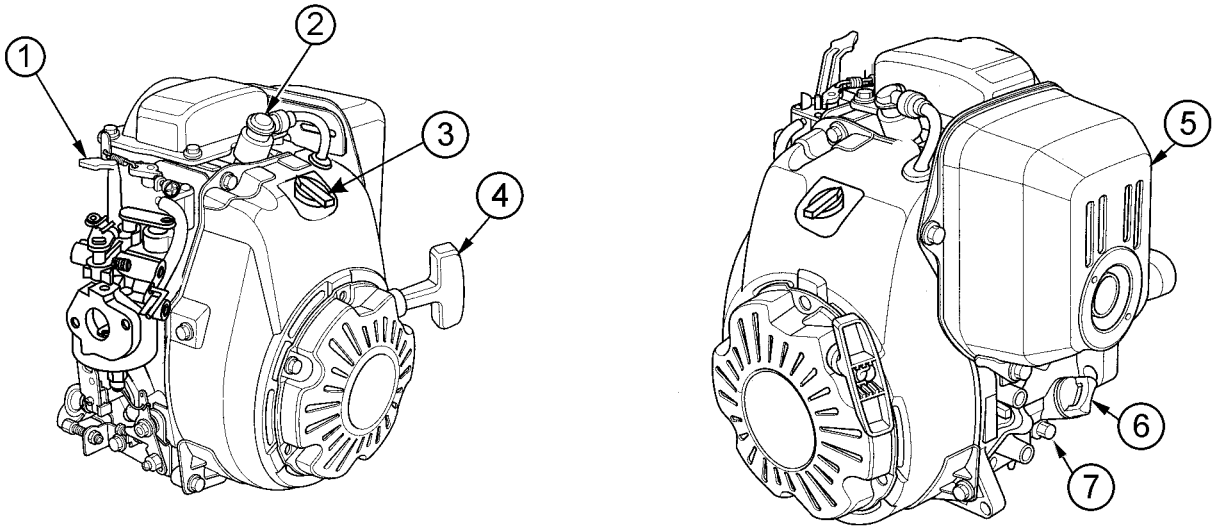

Figure 3. Honda GX100RTKRB6 Engine

The engine (Figure 3) must be checked for proper lubrication and filled with fuel prior to operation. Refer to the manufacturer's engine manual for instructions and details of operation and servicing.

1. **Choke Lever** — Normally used in starting the engine in cold weather conditions. In cold weather, turn the choke lever to the fully closed position. In warm weather, set the choke lever halfway or completely open.
2. **Engine ON/OFF Switch** — Controls the starting and stopping of the engine. Switch must be in the "ON" position when starting the engine.
3. **Spark Plug** — Provides spark to the ignition system. Set spark plug gap to 0.024 - 0.028 inch (0.6 - 0.7 mm). Clean spark plug once a week.
4. **Recoil Starter (pull rope)** — Manual-starting method. Pull the starter grip until resistance is felt, then pull briskly and smoothly.

NOTICE

Operating the engine without an air filter, with a damaged air filter, or a filter in need of replacement will allow dirt to enter the engine, causing rapid engine wear.

5. **Muffler** — Used to reduce noise and emissions.
6. **Dipstick/Oil Filler Cap** — Remove this cap to determine if the engine oil is low. Add oil through this filler port as recommended in Table 4.
7. **Oil Drain Plug** — Remove this plug to remove oil from the engine's crankcase.

⚠ WARNING



Engine components can generate extreme heat. To prevent burns, **DO NOT** touch these areas while the engine is running or immediately after operating. **NEVER** operate the engine with the muffler removed.

RAMMER LIFTING

1. Before lifting the machine, make sure that there is no damage to any of the components on the machine.

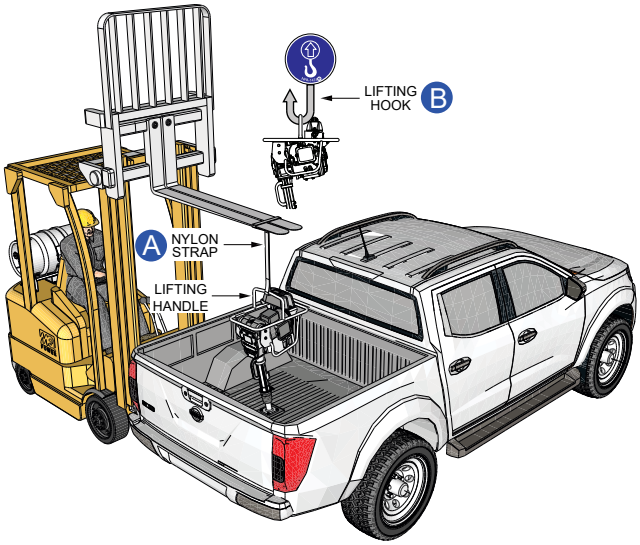

Figure 4. Rammer Lifting (Forklift/Crane)

2. Inspect the machine for damage to the rubber mounts and the lifting hook or nylon strap.
3. Make sure there are no loose or missing screws and the machine must generally be in a safe condition.
4. Turn the engine off before lifting the machine.
5. Only use a single hook or nylon strap to lift the machine. **DO NOT** support it from any other points (such as the handle).
6. When using a forklift or crane to lift the rammer, attach a suitable lifting strap (Figure 4**A**) or lifting hook (Figure 4**B**) to the ***lifting handle*** on the rammer.

RAMMER LOADING (TRUCK TAILGATE)

1. Tilt rammer so that it makes contact with the edge of the truck tail gate as shown in Figure 5.
2. Next, grab grip handle and ***push*** rammer forward until rammer is fully postioned onto truck bed.
3. Using straps, secure rammer to truck bed.

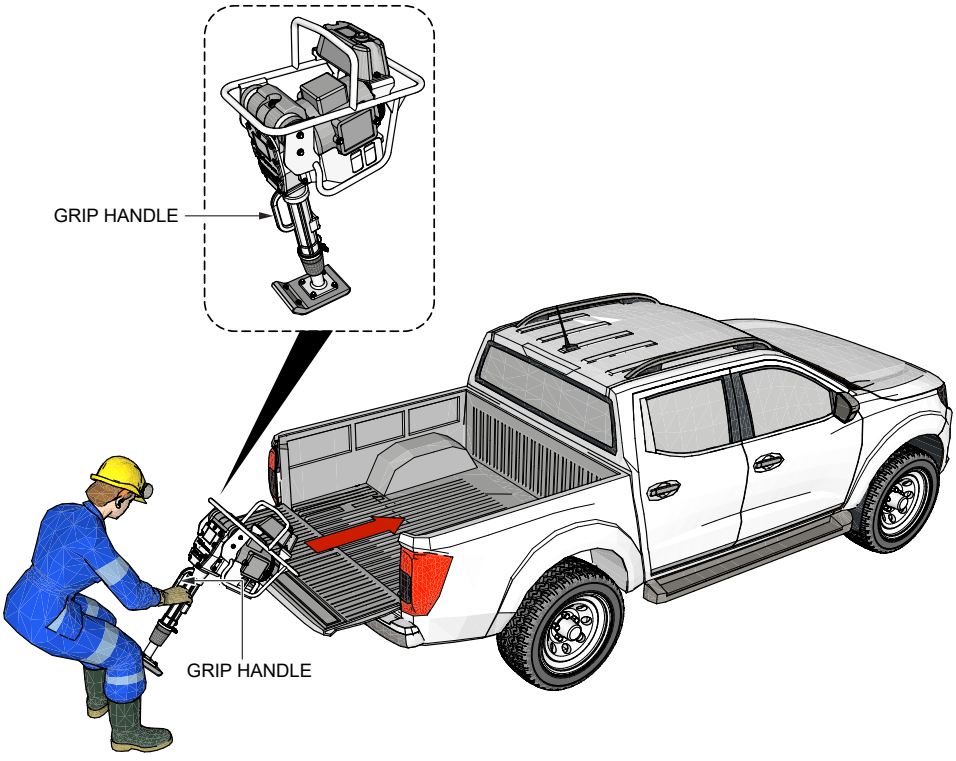

Figure 5. Loading Rammer Onto Truck Bed

This section is intended to assist the operator with the inspection of the rammer. It is extremely important that this section be read carefully before attempting to operate the rammer.

⚠ CAUTION

Failure to understand the operation of the Tamping Rammer could result in severe damage to the unit or personal injury.

GENERAL INSPECTION

- **DO NOT** use your rammer until this section is thoroughly understood.
- Check all nuts, bolts fasteners for tightness. Retighten as necessary.
- Clean any dirt from the recoil starter and engine cooling fins. Wipe the entire rammer clean before operating.
- Replace any missing or damaged Safety Operation decals.
- Adjust height of handle. Adjust handle by loosening nuts and moving handle to suit operation. Retighten nuts.

MAIN SPRING AND CRANKCASE LUBRICATION

1. There are ***four*** grease fittings (Figure 6) that require lubrication of the main spring and crankcase. Lubricate these fittings as outlined in the maintenance section of this manual.

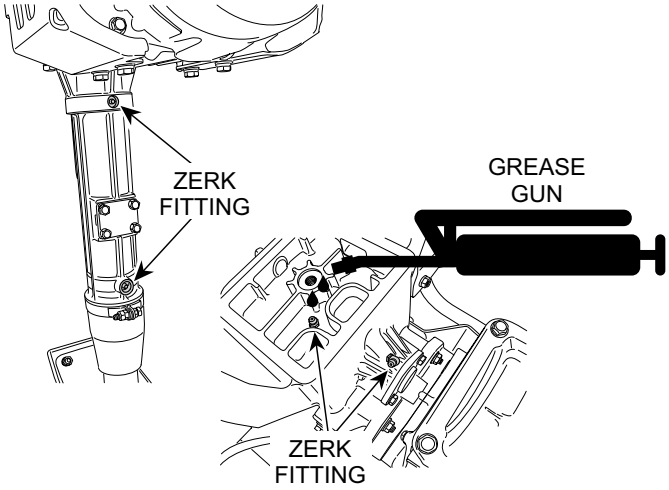

Figure 6. Lubrication Points

FUEL CHECK

⚠ WARNING



RISK OF FIRE! Refueling should be preformed only while the engine is off. Attempting to refuel while engine is running, or while the engine is hot, can ignite fuel spills and result in personal injury.

1. This rammer is equipped with a 4-cycled gasoline engine. Use only ***unleaded*** gasoline. High test ethyl gasoline is not recommended.
2. If fuel is low, remove the fuel filler cap (Figure 7) and fill with only unleaded gasoline. After refueling, make sure cap is tightened securely. **DO NOT** over fill. At the same time, check the engine oil (Figure 8) and make it a habit to replenish it often
3. Motor fuels are highly flammable and can be dangerous if mishandled. **DO NOT** smoke while refueling. **DO NOT** attempt to refuel the rammer if the engine is hot or running.

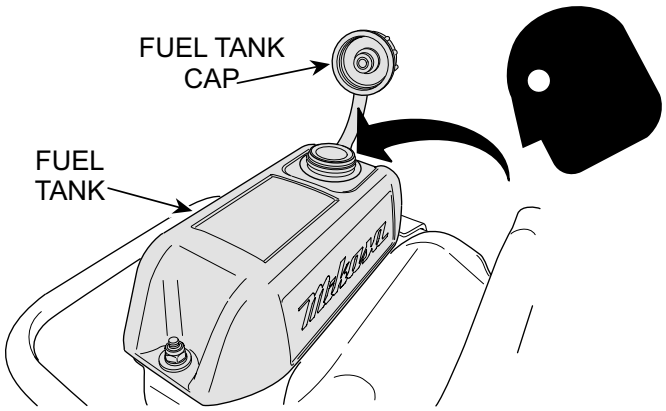

Figure 7. Fuel Tank

ENGINE OIL CHECK

1. To check the engine oil level, place the rammer on secure level ground with the engine stopped.
2. Remove the filler cap/dipstick from the engine oil filler hole (Figure 8) and wipe it clean.

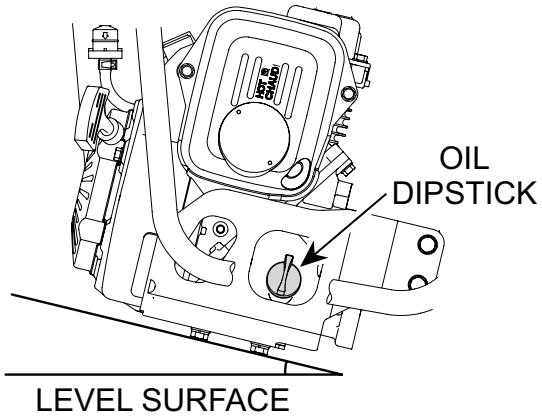

Figure 8. Engine Oil Dipstick

3. Insert and remove the dipstick without screwing it into the filler neck. Check the oil level shown on the dipstick.
4. If the oil level is low (Figure 9), fill to the edge of the oil filler hole with the recommended oil type (Table 4). Maximum oil capacity is 9.5 ounces (280 CC).

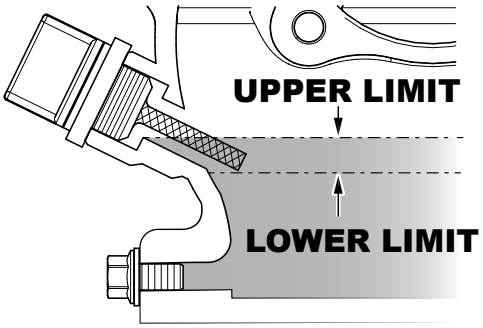

Figure 9. Oil Level

Table 4. Motor Oil Grade	
Season or Temperature	Grade of motor oil (higher than MS class)
Spring, Summer or Autumn +120° F to +15° F	SAE 30
Winter +40° F to +15° F	SAE 30
Below +15° F	SAE 10W-30

FOOT AND PRESSER PLATE CHECK

1. Check tightness of foot and presser plate nuts (Figure 10). Torque foot nuts (4) to 57.9 ft.-lbf (78.4 N·m) and the presser plate nuts (2) to 21.6 ft.-lbf (29.4 N·m).

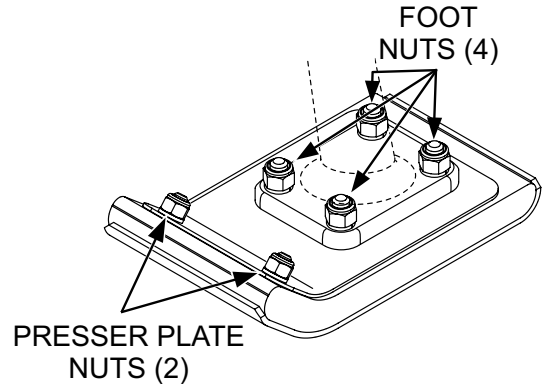

Figure 10. Foot/Presser Plate Check

2. Grease falls into the foot area (Figure 11) due to vibration during operation. This excessive amount of grease may cause the rammer to become unbalanced.

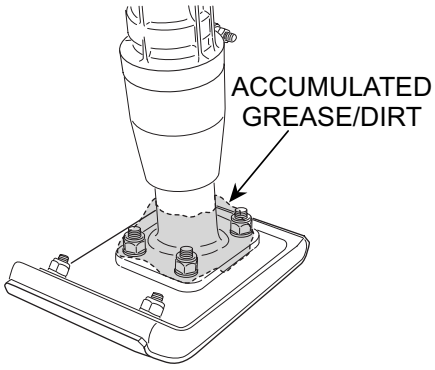

Figure 11. Cleaning Foot Area

3. Remove and clean the entire foot area before operating rammer.

OPERATION

⚠ CAUTION

Rammer should only be operated while ***standing behind the machine, and holding Guide Handle firmly with both hands*** (Figure 12**A**). **NEVER** operate rammer while holding handle/roller at the front of the machine (Figure 12**B**), damage to the unit could result and personal injury.

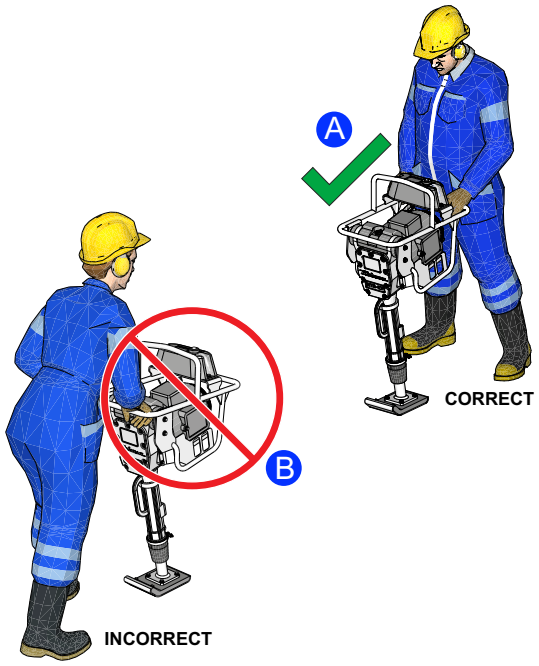

Figure 12. Rammer Operating Position

When starting the rammer, perform the following:

1. Open the fuel shut-off valve by moving the fuel cock lever to the open position (Figure 13).

.

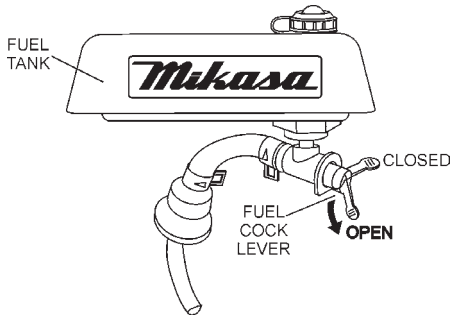

Figure 13. Fuel ShutOff Valve (Open)

2. Set the engine ON/OFF switch (Figure 14) to the "ON" position (start).

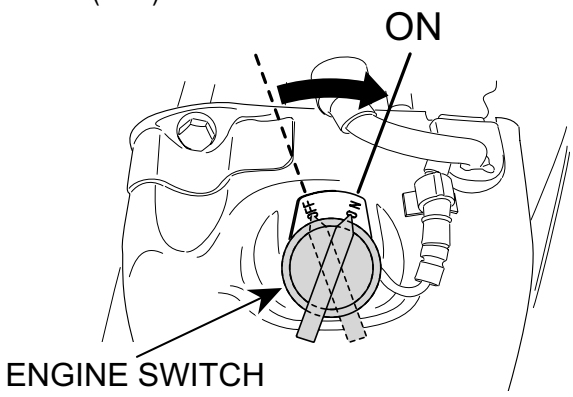

Figure 14. ON/OFF Switch (ON Position)

3. Move the throttle lever to the "IDLE" position (Figure 15).

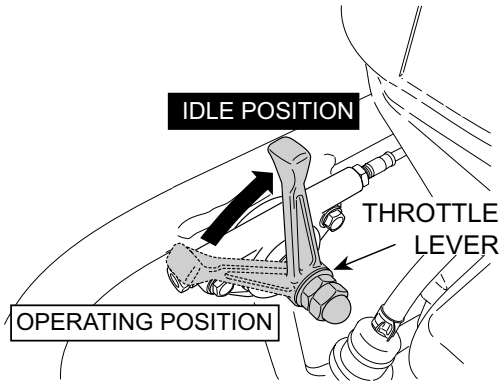

Figure 15. Throttle Lever (Idle)

4. In cold weather, start the unit with choke lever "Fully Closed" Figure 16). In warm weather or when the engine is warm, the unit can be started with choke halfway or completely open.

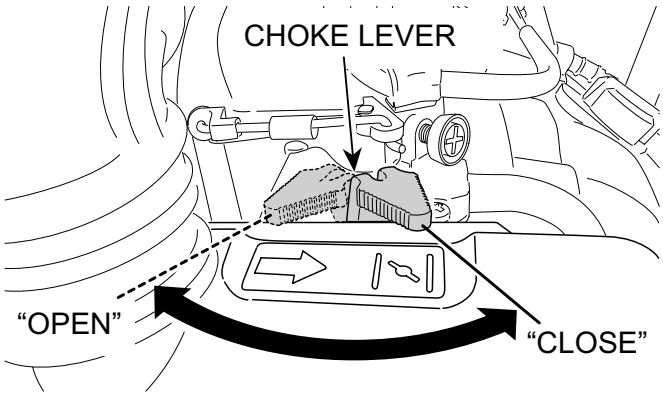

Figure 16. Choke Lever (Closed)

5. Grip the recoil starter (Figure 17) handle and pull it until you feel a slight resistance. Then pull sharply and quickly. Return the recoil starter handle to the starter position before releasing.

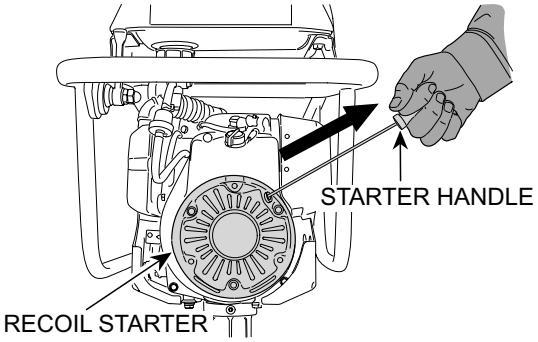

Figure 17. Recoil Starter

6. If engine fails to start, move the choke lever (Figure 16) to the half open position to avoid flooding.
7. Repeat steps 1 thru 6.
8. If the engine does not start after repeated attempts, check the spark plug for excess fuel. Clean and replace the spark plug as needed.
9. If the engine cannot be started after pulling the starter handle several times, remove the spark plug and see if it has a spark. If the plug is wet from fuel (due to flooding from the carburetor), or if it is stained, replace the plug or clean it thoroughly.

NOTICE

While the spark plug is removed, pull the starter handle/ rope 2 to 3 times to discharge any fuel from the cylinder.

10. To start the rammer tamping action, move the throttle lever (Figure 18) quickly from **IDLE** (close) to the **FULL OPEN** position. **DO NOT** move the throttle lever slowly as this may cause damage to the clutch or spring.

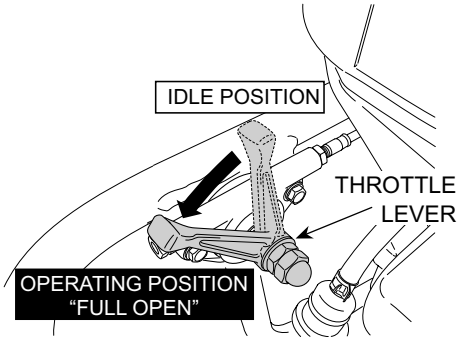

Figure 18. Throttle Lever (Full Open)

NOTICE

Make sure that the throttle lever is moved ***quickly*** to the **FULL OPEN** position. Operating the rammer at less than full speed can result in damage to the clutch springs or foot.

Shifting the throttle lever ***slowly*** will cause irregular operation and damage the clutch, springs and foot.

11. This rammer is designed to run at 3,800 to 4,100 rpm. At optimum rpm the foot hits at the rate between 644 ~ 695 impacts per minute. Increasing throttle speed past factory set rpm does not increase impacts and may damage unit.
12. The rammer designed to advance while tamping. For faster advance, pull back slightly on the handle so that rear of foot contacts soil first.

STOPPING THE ENGINE

Move throttle lever ***quickly*** from the **FULL OPEN** to **IDLE** position (Figure 19) and run the engine for three minutes at low speed.

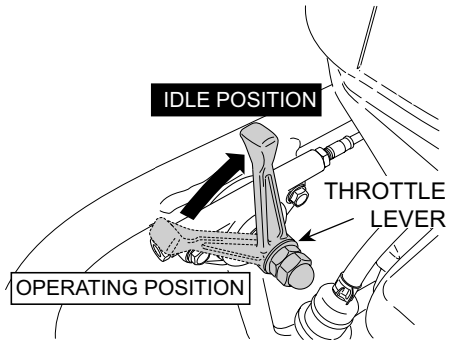

Figure 19. Throttle Lever (Idle)

13. After the engine cools, turn the engine ON/OFF switch to the "OFF" position (Figure 20).

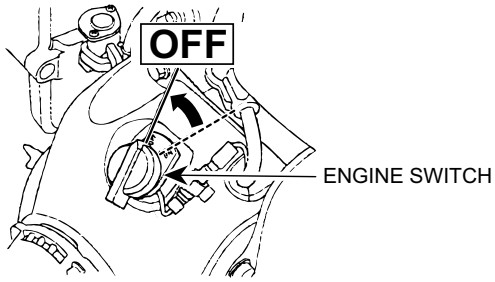

Figure 20. ON/OFF Switch (OFF Position)

14. Close the fuel shut- off valve (Figure 21) by moving the fuel cock lever to the **CLOSED** position.

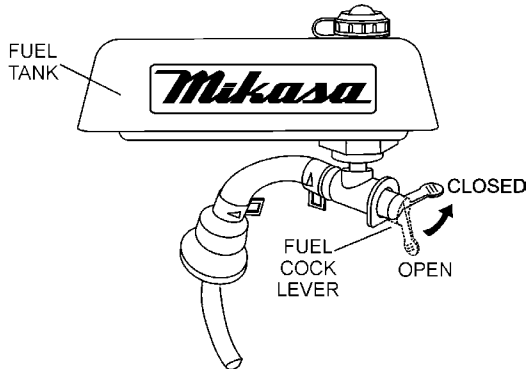

Figure 21. Fuel ShutOff Valve (Closed)

Emergency Showdown

15. Move the throttle lever quickly to the **IDLE** position, and turn the engine **ON/OFF** switch to the **OFF** position. Turn the fuel valve lever to the **CLOSED** position.

STORAGE

1. Wash off any dirt or mud on each part of the machine using fresh water. After the engine and main body have cooled down, store the machine on a level location.
2. Secure the machine body so that it can not fall down. If you have to lay the machine down, close the fuel tank cap securely and tighten engine oil drain plug.
3. Transport the machine in a manner that keeps it level. If you must lay the machine down to transport it, drain any fuel from the fuel tank and carburetor.Then close the fuel tank cap and oil fill plug securely.
4. Next, position the machine (Figure 22) so that the air cleaner will be facing up.

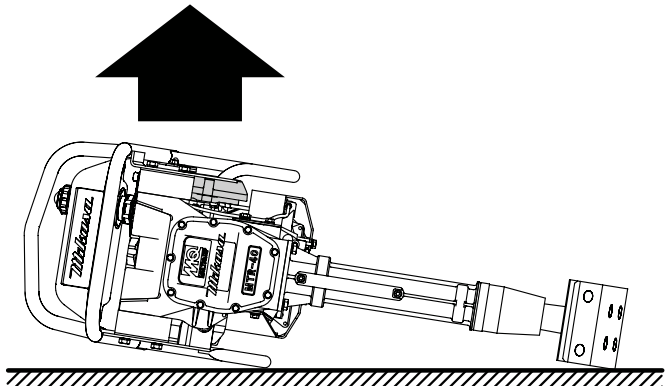

Figure 22. Transporting Rammer

5. Place a protective cover over the machine body to prevent dirt and debris from landing on it. Store the machine in a location that is not exposed to direct sunlight and which has low humidity.

LONG TERM STORAGE

For storage of the rammer for over ***30 days***, the following is required:

- Run the engine until the gasoline in the carburetor is completely consumed.
- Clean all external parts of the machine with a cloth.
- Slide the throttle lever to the **STOP** position.
- Drain any fuel including in the fuel hose or add STA-BIL to the fuel.
- Completely drain the oil from the crankcase and refill with fresh oil.
- Remove the spark plug, pour 2 or 3 cc of SAE 30 oil into the cylinder and crank slowly to distribute the oil.
- Replace lubrication oil and apply grease to lubrication points.
- Slowly rotate the engine a few times with the starter rope and install a new plug.
- Pull out the starter rope slowly and stop at the compression point.
- Cover the air intake on the air cleaner and the exhaust outlet on the muffler.
- Store unit indoors covered with plastic sheet in moisture free and dust free location out of direct sunlight.

DAILY

- Thoroughly remove dirt and oil from the engine compartment and rammer. Clean or replace the air cleaner elements as necessary. Check and retighten all fasteners as necessary. Check the bellows for oil leaks. Repair or replace as needed.

PRE-CLEANER (150 HOURS)

- Remove the element from the pre-cleaner (Figure 23) at the top of the crankcase (body side) and clean it with cleaning oil (kerosene).

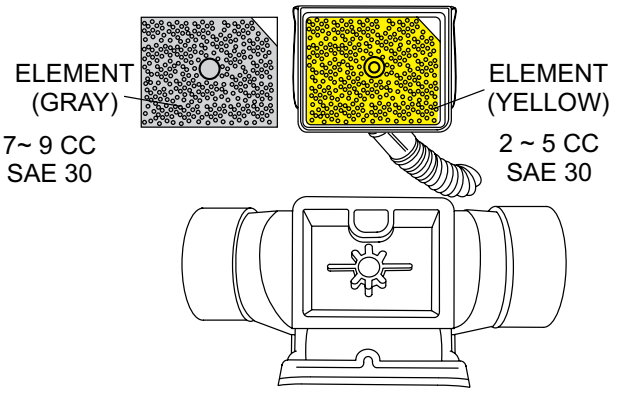

Figure 23. Primary Air Cleaner

- Lubricate the ***top element*** (yellow) with 2~5 cc of engine oil SAE-30.
- Lubricate ***bottom element*** (gray) with 7~9 cc of engine oil SAE-30 and completely squeeze out the excess oil from the element before installing.

AIR CLEANER (200 HOURS)

- Tap the paper filter element (Figure 24) several times on a hard surface to remove dirt, or blow compressed air [not exceeding 30 psi (207 kPa, 2.1 kgf/cm2)] through the filter element. **NEVER** brush off dirt. Brushing will force dirt into the fibers. Replace the paper filter element if it is excessively dirty.

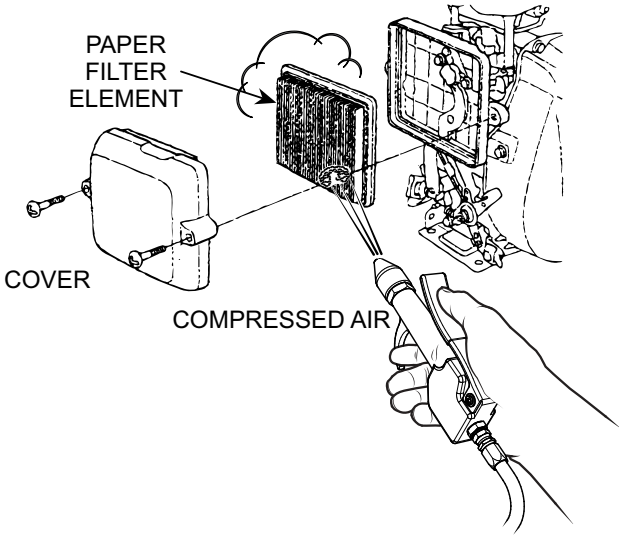

Figure 24. Engine Air Cleaner

MAIN SPRINGS LUBRICATION (8 HOURS)

- The rammer main springs (Figure 25) should be lubricated with ***five shots*** of grease with a hand grease gun after each eight (8) hours of use.
- Use MQ HIGH TEMPERATURE GREASE, P/N GRS2 or its equivalent.
- Equivalent greases include Shell Stamina or Texaco Thermatex, both of which have a bentone base and EP-2 rating.
- If an inferior grease is used, it may become too thick or too thin due to changes in temperature, and improper lubrication could result.

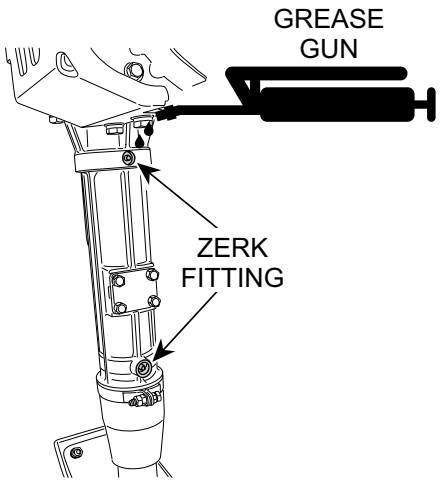

Figure 25. Grease Fittings (Main Springs)

CRANKCASE LUBRICATION (8 HOURS)

- The rammer crankcase bearings (Figure 26) should be lubricated with ***five shots*** of grease with a hand grease gun after each eight (8) hours of use.

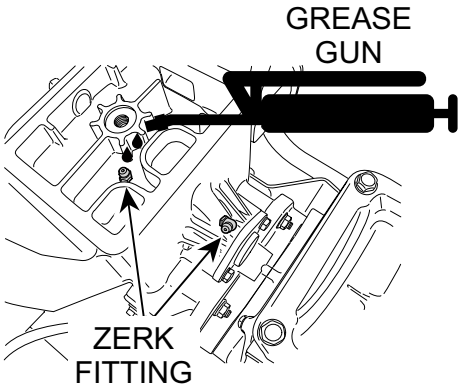

Figure 26. Grease Fittings (Crankcase)

- Use MQ HIGH TEMPERATURE GREASE, P/N GRS2 or its equivalent.

ENGINE OIL (50 HOURS)

- Replace the engine oil (Figure 27) after the first 20 hours of use, then every 50 hours of operation.

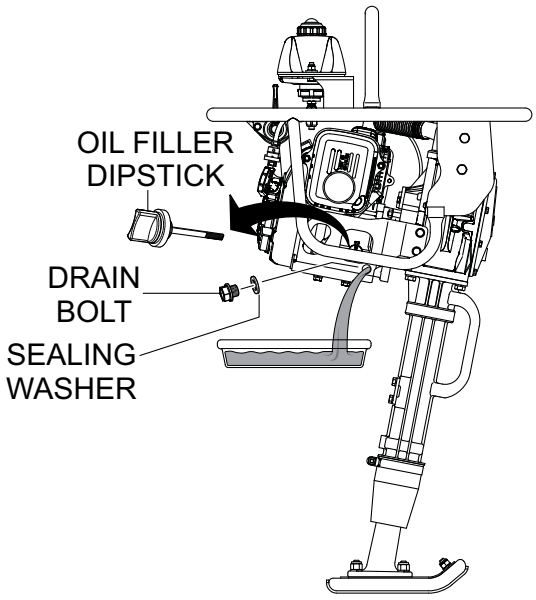

Figure 27. Draining Engine Oil

- Fill with recommended oil type as specified in Table 4.

FUEL LINES (2 YEARS)

- Check the fuel and oil lines regularly for damage and ensure that there are no leaks.
- Replace the fuel lines every two years to maintain the performance and flexibility of the fuel lines.

INTAKE PIPE (2 YEARS)

- Check regularly, make sure pipe is not damaged and associated mounting hardware is not loose.
- Replace intake pipe every two years.

FUEL COCK (50 HOURS)

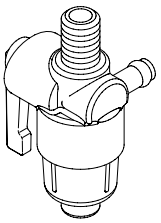

Figure 28. Fuel Cock

- Clean the fuel cock (Figure 28) every 50 hours of operation.

SPARK PLUG (50 HOURS)

- Remove and clean the spark plug (Figure 29), then adjust the spark gap to 0.024 ~0.028 inch (0.6~0.7 mm). This unit has electronic ignition, which requires no adjustments.

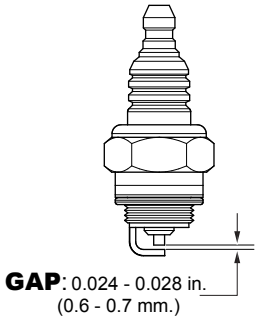

Figure 29. Spark PLug Gap

PRESSURE WASHER CLEANING

- When washing rammer with a high pressure washer (steam), **DO NOT** spray water directly on the air cleaner, carburetor, muffler or fuel tank cap. Spraying high pressure water on these components could adversely affect the starting of the rammer and cause damage to the components.

Table 5. Engine Maintenance Schedule							
DESCRIPTION (3)	OPERATION	BEFORE	FIRST MONTH OR 10 HRS.	EVERY 3 MONTHS OR 25 HRS.	EVERY 6 MONTHS OR 50 HRS.	EVERY YEAR OR 100 HRS.	EVERY 2 YEARS OR 200 HRS..
Engine Oil	CHECK	X					
	CHANGE		X				
Air Cleaner	CHECK	X					
	CHANGE			X (1)			
All Nuts & Bolts	Re-tighten If Necessary	X					
Spark Plug	CHECK-CLEAN				X		
	REPLACE						X
Cooling Fins	CHECK				X		
Spark Arrester	CLEAN					X	
Fuel Tank	CLEAN					X	
Fuel Filter	CHECK					X	
Idle Speed	CHECK-ADJUST					X (2)	
Valve Clearance	CHECK-ADJUST						X (2)
Fuel lines	CHECK	Every 2 years (replace if necessary) (2)					

(1) Service more frequently when used in DUSTY areas.

(2) These items should be serviced by your service dealer, unless you have the proper tools and are mechanically proficient. Refer to the **HONDA** shop Manual for service procedures.

(3) For commercial use, log hours of operation to determine proper maintenance intervals.

Troubleshooting (Engine)		
Symptom	**Possible Problem**	**Solution**
Difficult to start, fuel is available, but no spark at spark plug.	Combo lever in incorrect position?	Make sure combo lever is in start position.
	Spark plug bridging?	Check gap, insulation or replace spark plug.
	Carbon deposit on spark plug?	Clean or replace spark plug.
	Short circuit due to deficient spark plug insulation?	Check spark plug insulation, replace if worn.
	Improper spark plug gap?	Set to proper gap.
	Fuel reaching carburetor?	Check fuel line.
	Water in fuel tank?	Flush or replace fuel tank.
	Fuel filter clogged?	Replace fuel filter.
	Stuck carburetor?	Check float mechanism.
	Spark plug is red?	Check transistor ignition unit.
	Spark plug is bluish white?	If insufficient compression, repair or replace engine. If injected air leaking, correct leak. If carburetor jets clogged, clean carburetor.
	No spark present at tip of spark plug?	Check transistor ignition unit is broken, and replace defective unit. Check if voltage cord cracked or broken and replace. Check if spark plug if fouled and replace.
	No oil?	Add oil as required.
Difficult to start, fuel is available, and spark is present at the spark plug.	ON/OFF switch is shorted?	Check switch wiring, replace switch.
	Ignition coil defective?	Replace ignition coil.
	Improper spark gap, points dirty?	Set correct spark gap and clean points.
	Condenser insulation worn or short circuiting?	Replace condenser.
	Spark plug wire broken or short circuiting?	Replace defective spark plug wiring.
Difficult to start, fuel is available, spark is present and compression is normal.	Wrong fuel type?	Flush fuel system, replace with correct type of fuel.
	Water or dust in fuel system?	Flush fuel system.
	Air cleaner dirty?	Clean or replace air cleaner.
	Choke open?	Close choke.
Difficult to start, fuel is available, spark is present and compression is low.	Suction/exhaust valve stuck or protruded?	Reseat valves.
	Piston ring and/or cylinder worn?	Replace piston rings and/or piston.
	Cylinder head and/or spark plug not tightened properly?	Torque cylinder head bolts and spark plug.
	Head gasket and/or spark plug gasket damaged?	Replace head and spark plug gaskets.
No fuel present at carburetor.	No fuel in fuel tank?	Fill with correct type of fuel.
	Fuel cock does not open properly?	Apply lubricant to loosen fuel cock lever, replace if necessary.
	Fuel filter/lines clogged?	Replace fuel filter.
	Fuel tank cap breather hole clogged?	Clean or replace fuel tank cap.
	Air in fuel line?	Bleed fuel line.

Troubleshooting (Engine) - continued		
Symptom	**Possible Problem**	**Solution**
Weak in power, compression is proper and does not misfire.	Air cleaner dirty?	Clean or replace air cleaner.
	Improper level in carburetor?	Check float adjustment, rebuild carburetor.
	Defective spark plug?	Clean or replace spark plug.
	Improper spark plug?	Set to proper gap.
Weak in power, compression is proper but misfires.	Water in fuel system?	Flush fuel system and replace with correct type of fuel.
	Dirty spark plug?	Clean or replace spark plug.
	Ignition coil defective?	Replace ignition coil.
Engine overheats.	Spark plug heat value incorrect?	Replace with correct type of spark plug.
	Wrong type of fuel?	Replace with correct type of fuel.
	Cooling fins dirty?	Clean cooling fins.
	Intake air restricted?	Clear intake of dirt and debris. Replace air cleaner elements as necessary.
	Oil level too low or too high?	Adjust oil to proper level.
Rotational speed fluctuates.	Governor adjusted incorrectly?	Adjust governor.
	Governor spring defective?	Replace governor spring.
	Fuel flow restricted?	Check entire fuel system for leaks or clogs.
Recoil starter malfunctions. (if applicable)	Recoil mechanism clogged with dust and dirt?	Clean recoil assembly with soap and water.
	Spiral spring loose?	Replace spiral spring.
Starter malfunctions.	Loose, damaged wiring?	Ensure tight, clean connections on battery and starter.
	Battery insufficiently charged?	Recharge or replace battery.
	Starter damaged or internally shorted?	Replace starter.
Burns too much fuel.	Over-accumulation of exhaust products?	Check and clean valves. Check muffler and replace if necessary.
	Wrong spark plug?	Replace spark plug with manufacturer's suggested type.
Exhaust color is continuously "white".	Lubricating oil is wrong viscosity?	Replace lubricating oil with correct viscosity.
	Worn rings?	Replace rings.
Exhaust color is continuously "black".	Air cleaner clogged?	Clean or replace air cleaner.
	Choke valve set to incorrect position?	Adjust choke valve to correct position.
	Carburetor defective, seal on carburetor broken?	Replace carburetor or seal.
	Poor carburetor adjustment, engine runs too rich?	Adjust carburetor.
Will not start, no power with key "ON". (if applicable)	ON/OFF device not activated ON?	Turn on ON/OFF device.
	Battery disconnected or discharged?	Check cable connections. Charge or replace battery
	Ignition switch/wiring defective?	Replace ignition switch. Check wiring.

Troubleshooting (Rammer)		
Symptom	**Possible Problem**	**Solution**
Engine runs but rammer jumps erratically or not at all.	Operating speed of throttle lever is incorrectly set?	Set throttle lever to correct position.
	Oil in excess?	Drain excess oil. Bring to correct level.
	Clutch slips?	Replace or adjust clutch.
	Spring Failure?	Replace spiral spring.
	Speed of engine improper?	Adjust engine speed to correct operating RPM setting.
	Soil over-compacted?	Shut down machine and test soil.

OPERATION MANUAL

HERE'S HOW TO GET HELP

PLEASE HAVE THE MODEL AND SERIAL
NUMBER ON-HAND WHEN CALLING

UNITED STATES

Multiquip Inc.

(310) 537- 3700
6141 Katella Avenue Suite 200
Cypress, CA 90630
E-MAIL: mq@multiquip.com
WEBSITE: www.multiquip.com

CANADA

Multiquip

(450) 625-2244
4110 Industriel Boul.
Laval, Quebec, Canada H7L 6V3
E-MAIL: infocanada@multiquip.com

UNITED KINGDOM

Multiquip (UK) Limited Head Office

0161 339 2223
Unit 2, Northpoint Industrial Estate,
Globe Lane,
Dukinfield, Cheshire SK16 4UJ
E-MAIL: sales@multiquip.co.uk

© COPYRIGHT 2023, MULTIQUIP INC.

Multiquip Inc, the MQ logo are registered trademarks of Multiquip Inc. and may not be used, reproduced, or altered without written permission. All other trademarks are the property of their respective owners and used with permission.

This manual MUST accompany the equipment at all times. This manual is considered a permanent part of the equipment and should remain with the unit if resold.

The information and specifications included in this publication were in effect at the time of approval for printing. Illustrations, descriptions, references and technical data contained in this manual are for guidance only and may not be considered as binding. Multiquip Inc. reserves the right to discontinue or change specifications, design or the information published in this publication at any time without notice and without incurring any obligations.

MULTIQUIP®