OPERATION AND PARTS MANUAL

MULTIQUIP

MC-64S
MC-64P
CONCRETE MIXERS

Revision #7 (09/15/11)

To find the latest revision of this publication, visit our website at: www.multiquip.com



THIS MANUAL MUST ACCOMPANY THE EQUIPMENT AT ALL TIMES.

⚠ WARNING ⚠

CALIFORNIA — Proposition 65 Warning

Engine exhaust and some of its constituents, and some dust created by power sanding, sawing, grinding, drilling and other construction activities contains chemicals known to the State of California to cause cancer, birth defects and other reproductive harm. Some examples of these chemicals are:

- Lead from lead-based paints.
- Crystalline silica from bricks.
- Cement and other masonry products.
- Arsenic and chromium from chemically treated lumber.

Your risk from these exposures varies, depending on how often you do this type of work. To reduce your exposure to these chemicals: ALWAYS work in a well ventilated area, and work with approved safety equipment, such as dust masks that are specially designed to filter out microscopic particles.

NOTES

MQ Multiquip MC-64P/S Concrete Mixers

Here's How To Get Help 3
Table Of Contents 4
Parts Ordering Procedures 5
Specifications 6
Dimensions (Mixer) 7
Safety Message Alert Symbols 8
Rules For Safe Operation 9-10
Operation and Safety Decals 11
General Information 12
Mixer Basic Components 13
Basic Engine Components 14
Handwheel Assembly 15
Towing Guidelines 16
Safety Chain Connection 17
Electric Motor 18-19
Pre-Inspection (Gasoline Engine) 20
Initial Start-up (Gasoline Engine) 21
Initial Start-up (Electric Motor) 22
Operation 23
Maintenance (Engine) 24-25
Maintenance (Mixer) 26-28
Troubleshooting (Engine) 30
Troubleshooting (Engine/Mixer) 31
Explanation Of Code In Remarks Column 32
Suggested Spare Parts 33

Componet Drawings

Nameplate and Decals 34-35
Mixer Assembly (Steel Drum) 36-37
Mixer Assembly (Plastic Drum) 38-39
Main Frame Assembly 40-41
Axle Assembly 42-43
Cabinet Assembly 44-45
Gas Engine Mounting Plate Asasembly 46-47
Electric Motor Mounting Plate Asasembly 48-49

HONDA GX240K1QA2 ENGINE

Air Cleaner Assembly 50-51
Camshaft Assembly 52-53
Carburetor Assembly 54-55
Control Assembly 56-57
Crankcase Cover Assembly 58-59
Crankshaft Assembly 60-61
Cylinder Barrel Assembly 62-63
Cylinder Head Assembly 64-65
Fan Cover Assembly 66-67
Flywheel Assembly 68-69
Muffler Assembly 70-71
Fuel Tank Assembly 72-73
Ignition Coil 74-75
Piston Assembly 76-77
Recoil Starter 78-79
Label Assembly 80-81

HONDA GX160K1QX2 ENGINE

Air Cleaner Assy. 82-83
Camshaft Assy. 84-85
Carburetor Assy. 86-87
Control Assy. 88-89
Crankcase Cover Assy. 90-91
Crankshaft Assy. 92-93
Cylinder Barrel Assy. 94-95
Cylinder Head Assy. 96-97
Fan Cover Assy. 98-99
Flywheel Assy. 100-101
Fuel Tank Asssembly 102-103
Ignition Coil Asssembly 104-105
Label Asssembly 106-107
Muffler Asssembly 108-109
Piston Rings Asssembly 110-111
Recoil Starter Asssembly 112-113

Terms and Conditions of Sale 114

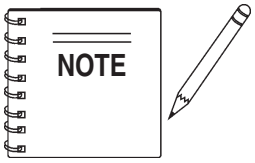

Specification and part number are subject to change without notice.

www.multiquip.com

Ordering parts has never been easier!
Choose from three easy options:

Effective:
January 1st, 2006

Best Deal!

Order via Internet (Dealers Only):
Order parts on-line using Multiquip's SmartEquip website!

- View Parts Diagrams
- Order Parts
- Print Specification Information

If you have an MQ Account, to obtain a Username and Password, E-mail us at: **parts@multiquip.com.**

To obtain an MQ Account, contact your District Sales Manager for more information.

Goto www.multiquip.com and click on Order Parts to log in and save!

Use the ***internet*** and qualify for a **5% Discount** on *Standard orders* for all orders which include complete part numbers.*

Note: Discounts Are Subject To Change

Order via Fax (Dealers Only):
All customers are welcome to order parts via Fax.
Domestic (US) Customers dial:
1-800-6-PARTS-7 (800-672-7877)

Fax your order in and qualify for a **2% Discount** on *Standard orders* for all orders which include complete part numbers.*

Note: Discounts Are Subject To Change

Order via Phone: **Domestic (US) Dealers Call:**
1-800-427-1244

Non-Dealer Customers:
Contact your local Multiquip Dealer for parts or call 800-427-1244 for help in locating a dealer near you.

International Customers should contact their local Multiquip Representatives for Parts Ordering information.

When ordering parts, please supply:

- ❒ **Dealer Account Number**
- ❒ **Dealer Name and Address**
- ❒ **Shipping Address (if different than billing address)**
- ❒ **Return Fax Number**
- ❒ **Applicable Model Number**
- ❒ **Quantity, Part Number and Description of Each Part**
- ❒ **Specify Preferred Method of Shipment:**
  - ✓ UPS/Fed Ex
    - Priority One
    - Ground
    - Next Day
    - Second/Third Day
  - ✓ DHL
  - ✓ Truck

NOTICE

All orders are treated as *Standard Orders* and will ship the same day if received prior to 3PM PST.

WE ACCEPT ALL MAJOR CREDIT CARDS!

Table 1. Specifications (Engines/Electric Motor)				
Engine/Electric Motor	**Model**	**HONDA GX160K1QX2**	**HONDA GX240K1QA2**	**Baldor 35LYL229**
	Type	Air-cooled 4 stroke, Single Cylinder, OHV, Horizontal Shaft Gasoline Engine	Air-cooled 4 stroke, Single Cylinder, OHV, Horizontal Shaft Gasoline Engine	1.5 HP, Single-phase 115/230 VAC, Electric Motor
	Bore X Stroke	2.7 in. X 1.8 in. (68 mm x 45 mm)	2.90 in. X 2.30 in. (73 mm x 58 mm)	N/A
	Displacement	9.9 cu. in. (163 cc)	14.81 cc	N/A
	Max Output	5.5 H.P./4000 rpm	8.0 H.P./3600 R.P.M.	1.5 HP/1725 R.P.M.
	Fuel Tank Capacity	0.95 U.S. Gallons (3.6 Liters)	Approx. 1.59 U.S. Gallons (6 Liters)	N/A
	Fuel	Unleaded Automobile Gasoline	Unleaded Gasoline	N/A
	Lube Oil Capacity	0.63 qt. (0.6 liter)	2-1/3 pints	N/A
	Speed Control Method	Centrifugal Fly-weight Type	Centrifugal Fly-weight Type	N/A
	Starting Method	Recoil Start	Recoil Start	Electric
	Input Voltage	N/A	N/A	115/230 VAC Single Phase
Dimension (L x W x H)		12.3 x 14.3 X 13.2 in. (312 X 362 X 335 mm)	14.0 x 16.9 X 16.1 in. (355 X 430 X 410 mm)	15.55 x 8.65 X 9.06 in. (395 X 220 X 230 mm)
Dry Net Weight		40.8 lbs (15.0 Kg.)	55.1 lbs (25 Kg.)	Approx. 12 lbs (5.4 kg.)

Table 2. MC-64P/S Mixer Specifications	
Height	59 in. (1,499 mm)
Width	51 in. (1,295 mm)
Length	78 in. (1,983 mm)
Maximum Drum Capacity	8.82 cu. ft. (250 liters)
Maximum Drum Capacity	6.0 cu. ft. (170 liters)
Bag Capacity	(1/2 to 1 bag)
Weight - With Engine/ElectricMotor	680 lbs. (308 Kg.)

See Table 2 for mixer dimensions

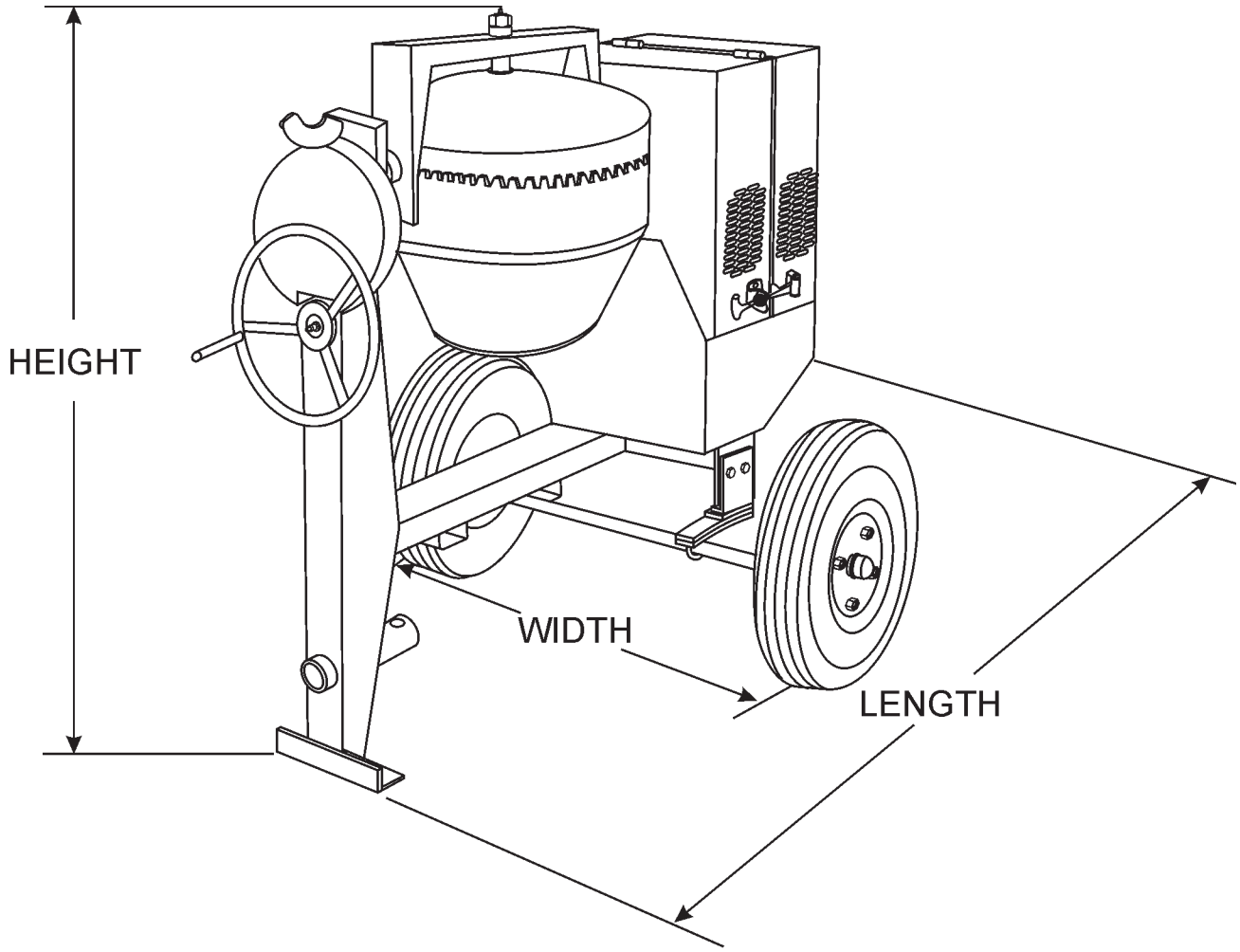

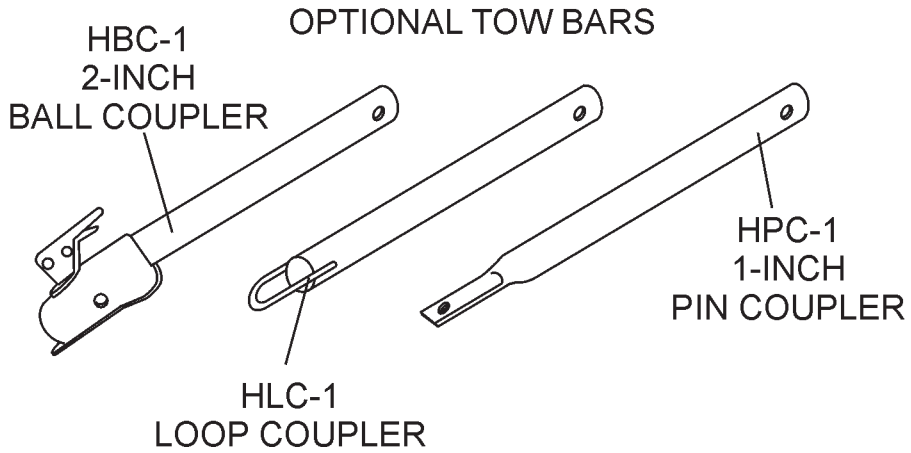

Figure 1. Mixer Dimensions

MC-64P/S CONCRETE MIXER — SAFETY MESSAGE ALERT SYMBOLS

FOR YOUR SAFETY AND THE SAFETY OF OTHERS!

Safety precautions should be followed at all times when operating this equipment. Failure to read and understand the Safety Messages and Operating Instructions could result in injury to yourself and others.

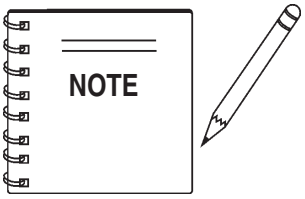

This Owner's Manual has been developed to provide complete instructions for the safe and efficient operation of the **Multiquip *Model MC-64P (Plastic) and MC-64S (Steel) Concrete Mixers.*** **Before using these mixers, ensure that the operating individual has read and understands all instructions in this manual.**

SAFETY MESSAGE ALERT SYMBOLS

The three (3) Safety Messages shown below will inform you about potential hazards that could injure you or others. The Safety Messages specifically address the level of exposure to the operator, and are preceded by one of three words: **DANGER**, **WARNING**, or **CAUTION**.



DANGER: You **WILL** be **KILLED** or SERIOUSLY injured if you do not follow directions.



WARNING: You **CAN** be **KILLED** or SERIOUSLY injured if you do not follow directions.



CAUTION: You **CAN** be injured if you do not follow directions.

Potential hazards associated with the Multiquip MC-64P/S concrete mixers operation will be referenced with Hazard Symbols which appear throughout this manual, and will be referenced in conjunction with Safety Message Alert Symbols.

HAZARD SYMBOLS

Rotating Parts



NEVER operate equipment with covers, or guards removed. Keep fingers, hands, hair and clothing away from all moving parts to prevent injury.

Accidental Starting



ALWAYS place the circuit breaker or power ON/OFF switch in the **OFF** position when the pump is not in use.

Sight and Hearing hazard

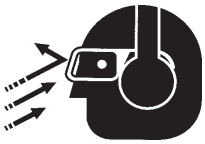

ALWAYS wear approved eye and hearing protection.

Respiratory Hazard



ALWAYS wear approved respiratory protection.

Equipment Damage Messages

Other important messages are provided throughout this manual to help prevent damage to your mixer, other property, or the surrounding environment.

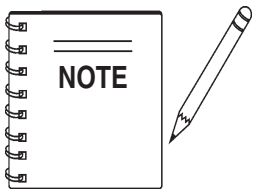

This mixer, other property, or the surrounding environment could be damaged if you do not follow instructions.

DANGER:

Failure to follow instructions in this manual may lead to serious injury or even death! This equipment is to be operated by trained and qualified personnel only! This equipment is for industrial use only.

The following safety guidelines should always be used when operating the Multiquip MC-64P/S Concrete Mixers:

GENERAL SAFETY



- **DO NOT** operate or service this equipment before reading this entire manual.



- This equipment should not be operated by persons under 18 years of age.
- **NEVER** operate this equipment without proper protective clothing, shatterproof glasses, steel-toed boots and other protective devices required by the job.



- **NEVER** operate this equipment when not feeling well due to fatigue, illness or taking medicine.



- **NEVER** operate this equipment under the influence or drugs or alcohol.

- Whenever necessary, replace nameplate, operation and safety decals when they become difficult read.
- **ALWAYS** check the machine for loosened threads or bolts before starting.
- **ALWAYS** wear proper respiratory (mask) hearing and eye protection equipment when operating the mixer.



- ***NEVER!*** place hands inside the drum while the drum is rotating.

- **NEVER** touch the hot exhaust manifold, muffler or cylinder. Allow these parts to cool before servicing engine or mixer.



- **High Temperatures** – Allow the engine to cool before adding fuel or performing service and maintenance functions. Contact with *hot* components can cause serious burns.

- The engine of this mixer requires an adequate free flow of cooling air. ***NEVER!*** operate the mixer in any enclosed or narrow area where free flow of the air is restricted. If the air flow is restricted it will cause serious damage to the mixer or engine and may cause injury to people and property. Remember the mixer's engine (gasoline models only) gives off **DEADLY** gases.

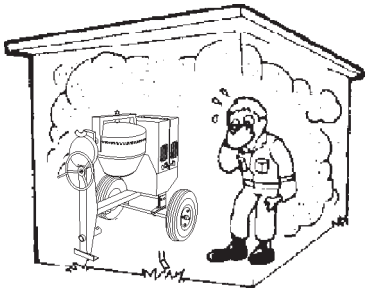

- **ALWAYS** refuel in a well-ventilated area, away from sparks and open flames.
- **ALWAYS** use extreme caution when working with **flammable** liquids. When refueling, **stop the** engine and allow it to cool. **DO NOT** smoke around or near the machine. Fire or explosion could result from fuel vapors, or if fuel is spilled on a hot engine.
- **NEVER** operate the mixer in an explosive atmosphere or near combustible materials. An explosion or fire could result causing severe ***bodily harm or even death***.



- Topping-off to filler port is dangerous, as it tends to spill fuel.
- Refer to the ***Engine Owner's Manual*** for engine technical questions or information.
- **NEVER** use accessories or attachments, which are not recommended by Multiquip for this equipment. Damage to the equipment and/or injury to user may result.
- Manufacturer does not assume responsibility for any accident due to equipment modifications.

- **NEVER** run engine without air cleaner. Severe engine damage may occur.
- **ALWAYS** read, understand, and follow procedures in Operator's Manual before attempting to operate equipment.
- **ALWAYS** be sure the operator is familiar with proper safety precautions and operations techniques before using roller.
- **ALWAYS** store equipment properly when it is not being used. Equipment should be stored in a clean, dry location out of the reach of children.
- **NEVER** leave the mixer unattended, turn off engine or electric motor when unattended.
- **CAUTION** must always be observed while servicing this mixer. Rotating parts can cause injury if contacted.
- Unauthorized equipment modifications will void all warranties.
- Ensure that any extension cable is protected against damage and not liable to be tripped over or trapped underneath the mixer.
- **DO NOT** allow extension cord to come into contact with water or fluids.
- **DO NOT** spray water onto electric motor.
- This mixer is intended for the production of concrete. Mixer must be used only for its intended purpose.
- This mixer is not suitable for the mixing of ***flammable*** or ***explosive*** substances.
- **NEVER** operate the mixer in an ***explosive*** atmosphere.
- Before starting the mixer, check that all ***guards*** are in position and correctly fitted.
- Keep area around the mixer ***clear of obstructions*** which could cause persons to fall onto ***moving parts***.
- **ALWAYS** ensure mixer is on level ground before mixing.
- Become familiar with the controls of the mixer before operating.
- **ALWAYS** replace any worn or damaged warning decals.
- Ensure the drum is ***rotating*** while filling and emptying the drum.
- **ALWAYS** disconnect AC power plug from power source before moving mixer (electric model only).
- **High Temperatures** – Always stop engine and allow the engine to cool before adding fuel, oil or performing service and maintenance functions. Contact with ***hot*** components can cause serious burns.
- **NEVER** disconnect any ***"emergency or safety devices"***. These devices are intended for operator safety. Disconnection of these devices can cause severe injury, bodily harm or even death! Disconnection of any of these devices will void all warranties.
- If mixer is equipped with an electric motor, operate electric motor only at the specified voltage indicated on the nameplate.
- Make sure the ***OFF/ON*** power switch on the electric motor is ***always*** in the ***OFF*** position before inserting the mixer's power plug into an AC receptacle (electric model only).

Maintenance Safety

- **NEVER** lubricate components or attempt service on a running machine.
- **ALWAYS** allow the machine a proper amount of time to cool before servicing.
- Keep the machinery in proper running condition.
- Fix damage to the machine immediately and always replace broken parts, or missing decals.
- Dispose of hazardous waste properly. Examples of potentially hazardous waste are used motor oil, fuel and fuel filters.
- **DO NOT** use food or plastic containers to dispose of hazardous waste.
- **DO NOT** pour waste, oil or fuel directly onto the ground, down a drain or into any water source.

Emergencies

- **ALWAYS** know the location of the nearest ***fire extinguisher*** and **first aid kit.**





- In emergencies ***always*** know the location of the nearest phone or ***keep a phone on the job site***. Also know the phone numbers of the nearest ***ambulance***, ***doctor*** and ***fire department***. This information will be invaluable in the case of an emergency.





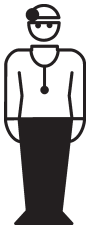



Machine Safety Decals

The Multiquip MC-64P/S mixers are equipped with a number of safety decals (Figure 1A). These decals are provided for operator safety and maintenance information. The illustration below and on the next page shows these decals as they appear on the machine. Should any of these decals become unreadable, replacements can be obtained from your dealer.



P/N: 13118



CONTACT MQ PARTS DEPARTMENT



P/N: 512910



P/N: DCL151



P/N: CIPDCL160



P/N: 504713



P/N: 35137



P/N: EM948630

Figure 1A. MC-64P/S Mixer Decals

Application

This mixer is ***only*** intended for the production of ***concrete***. The mixer must be used for its intended purpose and is not suitable for the mixing of ***flammable*** or ***explosive*** substances. The mixer ***must not be used*** in an explosive atmosphere. Use Table 4 (Mixing Hints) as a guide when mixing concrete for various applications.

Power Plants

The Multiquip MC-64P and MC-64S mixers can be powered by a variety of power plants or an electric motor. Refer to Table 2 to for specific engine or electric motor data information. All engines are air-cooled, 4-stroke gasoline engines.

Electrical

If mixer is equipped with an ***electric motor***, make sure that the power being supplied to the motor corresponds to the voltage rating label on the motor. Supplying the wrong voltage to the electric motor will cause severe electrical damage to the motor.

Always make sure the ***OFF/ON*** switch on the electric motor is in the ***OFF*** position before applying power.

It is ***strongly recommended*** when inserting the mixer's power cord into a receptacle, that a G.F.C.I. (***Ground Fault Current Interrupter***) receptacle be used (115 VAC applications).

Extension Cables

The extension cable should be a 3-wire configuration that includes a ground wire that conforms to UL code. The wire cross section must be a minimum of 2.5 mm^2 . Choose an extension cord of adequate current carrying capacity as referenced in Table 5. Remember ***cable distance*** affects the current-voltage capacity of the extension cable.

Ensure that the extension cable is carefully laid out avoiding ***wet areas***, ***sharp edges*** and locations where vehicles might run over it. Avoid allowing the extension cable to be trapped underneath the mixer.

Unroll the extension cable fully or it will overheat and could catch fire. Make sure that all extension cable connections are dry and safe. Replace any defective or badly worn extension cable immediately.

Hardware

Check all hardware on the mixer before starting. Periodically inspect all hardware. Loose hardware can contribute to early component failure and poor performance. Use Table 3 as general guideline when the torqueing of mixer hardware is required. Remember to keep all mixer hardware components tight.

Table 3. Hardware Torque Recommendations

Hardware Diameter	Torque (ft-lbs)
5/16-inch x 18	14
3/8-inch x 16	24
3/8-inch x 24	37
1/2-inch x 13	39
1/2-inch x 13 (Grade 8)	90

Engine Maintenance

For basic engine maintenance, refer to the engine maintenance section in this manual. For a more detailed engine maintenance, refer to the ***Honda*** or ***Robin*** Engine Owner's manual furnished with the engine.

Table 4. MIXING HINTS

APPLICATIONS	MIX RATIOS	BATCH QUANTITIES					APPROX. BATCH OUTPUT	
		CEMENT 112 lbs. (50 Kgs.) Bag	SAND		STONE			
			CU. FT.	LTR	CU. FT.	LTR	CU. FT.	LTR
Most Ordinary	1:2:4	1/2 BAG	1-1/4	35	2-1/2	71	3	85
Foundations	1:3:6	1/3 BAG	1-1/4	35	2-1/2	71	2-3/4	78
Rough Mass Concrete	1:4:8	1/4 BAG	1-1/4	35	2-1/2	71	2-3/4	78
Watertight Floors, Tanks, Pits, Etc.	1:1-1/2:3	2/3 BAG	1-1/4	35	3	71	3	85

Figure 2. Mixer Major Components

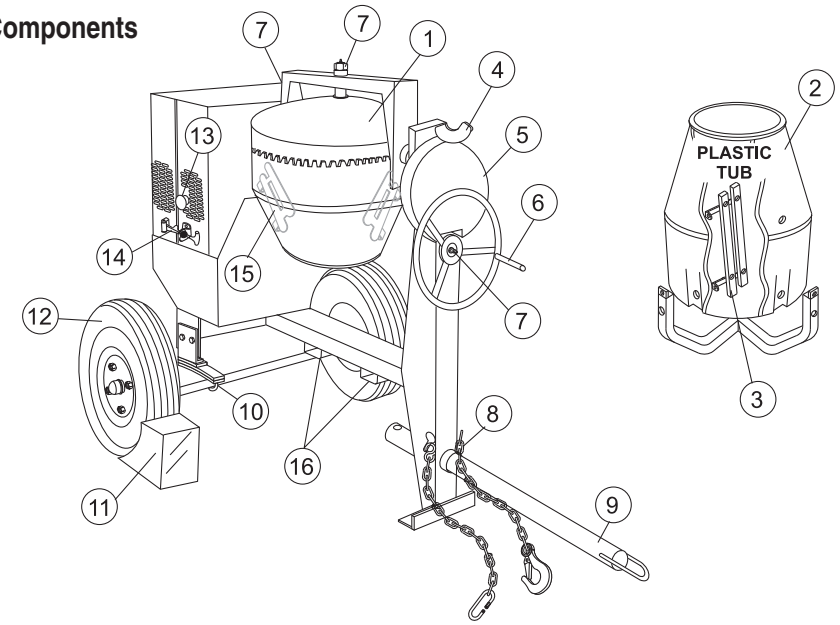

1. **Steel Mixing Drum** — The Multiquip MC-64S uses a 6 cu. ft ***steel*** mixing drum. This drum is to be used for mixing of concrete. Always clean the drum after each use. **DO NOT** use this mixing drum for the mixing of ***volatile liquids.***
2. **Plastic Mixing Drum** — The Multiquip MC-64P uses a 6 cu. ft ***plastic*** mixing drum. This drum is to be used for mixing of concrete. Always clean the drum after each use. **DO NOT** use this mixing drum for the mixing of ***volatile liquids***.
3. **Mixing Blades (Plastic)** — Used for the mixing of concrete. Replace blades when they show signs of wear. Reference plastic mixing drum in the parts section of this manual.
4. **Dump Latch** — To rotate the mixing drum, this latch must be in the up position. To lock the drum, place the latch in the down position.
5. **Dump Gear Guard** — **NEVER** operate the mixer with this guard removed. Its purpose is to prevent dirt and debris from entering the dump gear. In addition operator clothing could become entangled in the dump gear, causing severe injury and bodily harm.
6. **Handwheel** — Turn this wheel clockwise or counter-clockwise to rotate the mixing drum. Remember the dump latch must be in the ***up position*** in order for the mixing drum to be rotated.
7. **Zerk Fittings** — There is, at the bottom and engine side of the **yoke**, and center of the ***handwheel*** grease zerk fittings. Lubricate these fittings as referenced in the maintenance section of this manual.
8. **Safety Chain** — This mixer uses a 3/16-inch thick, 72-inches long zinc-plated saftey chain. ***ALWAYS*** connect the safety chain when towing.
9. **Tow Bar** — This mixer uses various towing bars, please reference the frame assembly drawing and parts list in this manual to determine which tow bar meets your requirements.
10. **Leaf Suspension** — This mixer uses a leaf type suspension. Check the mounting hardware for bolt hole elongation and tightness. See maintenance section of this manual for recommended maintenance.
11. **Chock Blocks** — Place these blocks (not included as part of the mixer package) under each mixer wheel to prevent rolling, when mixer is not connect to the towing vehicle.
12. **Tires Ply** — The tire ply (layers) number is rated in letters; This mixer uses 13-inch 2-ply tires. Replace with only recommended type tires.
13. **ON/OFF Switch (gasoline only)** — This switch is provided on *mixers with* ***gasoline*** engines only and is located on the side of the mixer frame. When activated it will shut down the engine. Pull out when starting the engine.
14. **Cabinet/Latch** — Encloses engine and electric motor. **NEVER** run mixer with cabinet removed. Use latches to secure engine compartment cabinet.
15. **Mixing Blades (Steel)** — Used for the mixing of concrete. When blades show signs of wear, entire steel mixing drum assembly must be replaced. See steel mixing drum assembly in the parts section of this manual.
16. **Forklift Pockets –** When lifting of the mixer is required, use these fork lift pockets to lift the mixer. Remember to insert the forks of the forklift a minimum of 24 inches into the lift pockets.

Honda GX Series Engine Shown

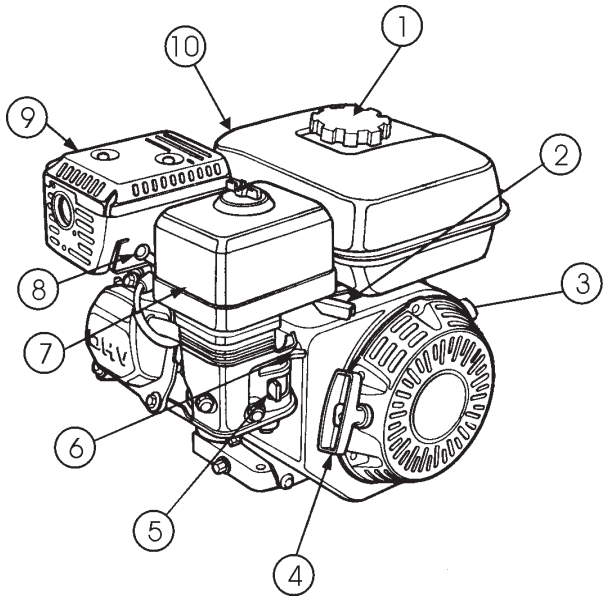

Figure 3. Engine Controls and Components

INITIAL SERVICING

The engine (Figure 3) must be checked for proper lubrication and filled with fuel prior to operation. Refer to the manufacturers Engine manual for instructions & details of operation and servicing.

1. **Fuel Filler Cap –** Remove this cap to add unleaded gasoline to the fuel tank. Make sure cap is tightened securely. **DO NOT** over fill.



WARNING

Adding fuel to the tank should be accomplished only when the engine is stopped and has had an opportunity to cool down. In the event of a fuel spill, **DO NOT** attempt to start the engine until the fuel residue has been completely wiped up, and the area surrounding the engine is dry.

2. **Throttle Lever –** Used to adjust engine RPM speed (lever advanced forward ***SLOW***, lever back toward operator ***FAST***).
3. **Engine ON/OFF Switch –** ON position permits engine starting, OFF position stops engine operations.
4. **Recoil Starter (pull rope) –** Manual-starting method. Pull the starter grip until resistance is felt, then pull briskly and smoothly.
5. **Fuel Valve Lever – OPEN** to let fuel flow, **CLOSE** to stop the flow of fuel.
6. **Choke Lever –** Used in the starting of a cold engine, or in cold weather conditions. The choke enriches the fuel mixture.
7. **Air Cleaner –** Prevents dirt and other debris from entering the fuel system. Remove wing-nut on top of air filter cannister to gain access to filter element.

NOTE
Operating the engine without an air filter, with a damaged air filter, or a filter in need of replacement will allow dirt to enter the engine, causing rapid engine wear.

8. **Spark Plug –** Provides spark to the ignition system. Set spark plug gap to 0.6 - 0.7 mm (0.028 - 0.031 inch). Clean spark plug once a week.
9. **Muffler –** Used to reduce noise and emissions.



WARNING

Engine components can generate extreme heat. To prevent burns, **DO NOT** touch these areas while the engine is running or immediately after operating. **NEVER** operate the engine with the muffler removed.

10. **Fuel Tank –** Holds unleaded gasoline. For additional information refer to engine owner's manual.

Assembly

The MC-64P/S concrete mixers are shipped with the handwheel detached. Attach the handwheel to the mixer as shown in Figure 4.

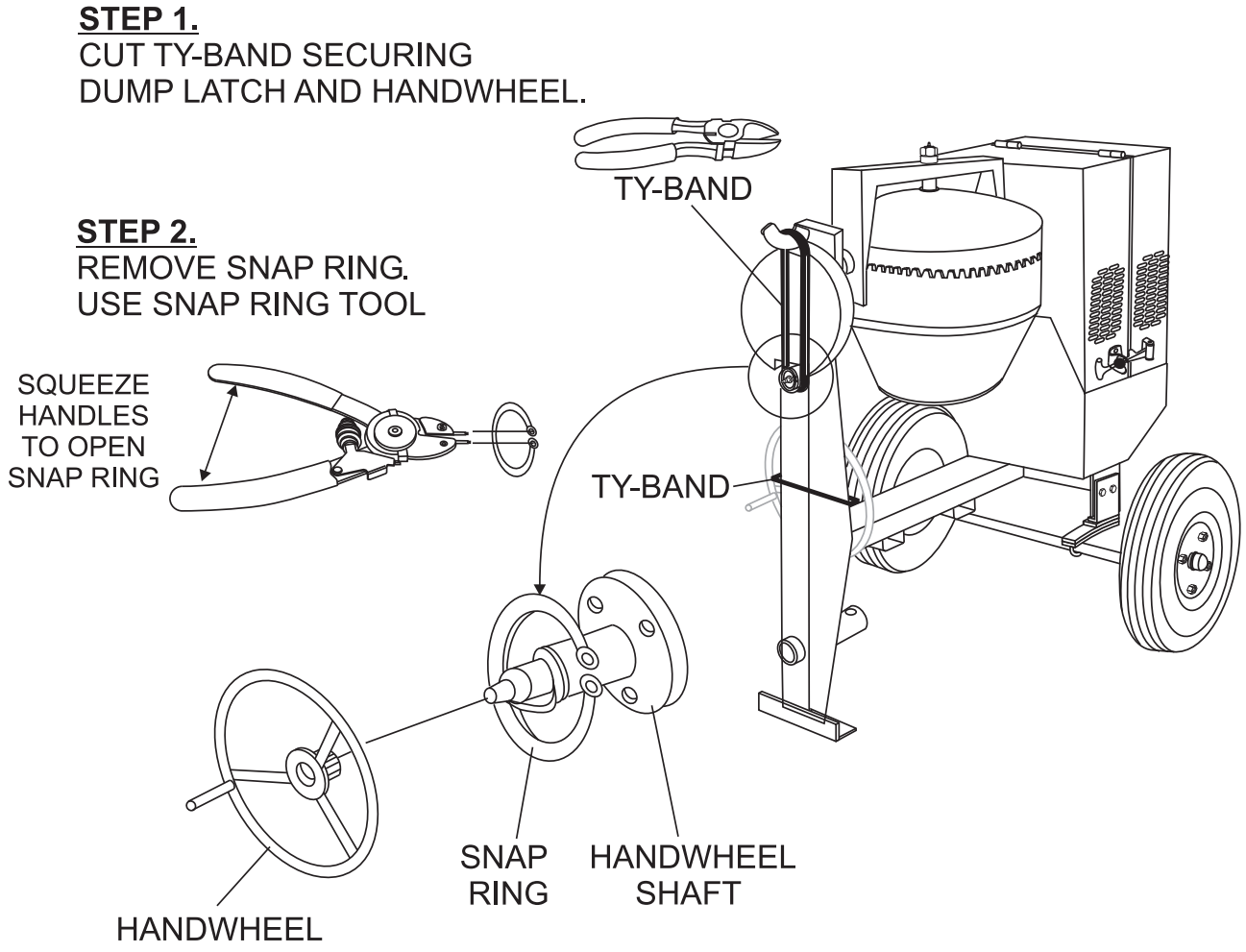

Figure 4. Handwheel Assembly

Towing Safety Precautions

CAUTION:



- Check with your county or state safety towing regulations department before towing your ***mixer***.

To reduce the possibility of an accident while transporting the mixer on public roads, always make sure that the mixer towing components and the towing vehicle are in good operating condition and both units are mechanically sound.

The following list of suggestions should be used when towing the mixer:

- Make sure that the hitch and coupling of the towing vehicle are rated equal to, or greater than the trailer "gross vehicle weight rating" (GVWR).
- **ALWAYS** inspect the hitch and coupling for wear. **NEVER** tow the mixer with defective hitches, couplings, chains etc.
- **CHECK** the tire air pressure on both the towing vehicle and the trailer. Also check the tire tread wear on both vehicles.
- **ALWAYS** make sure the mixer is equipped with a "**Safety Chain**".
- **ALWAYS** attach trailer's safety chain to the frame of towing vehicle.
- **ALWAYS** make sure that the towing vehicle's directional, backup, and brake lights are working properly.
- Remember in most cases the maximum speed unless otherwise posted for highway towing is 45 MPH, however before towing your mixer, check your local state, and county vehicle towing requirements. Recommended off-road towing is not to exceed **10 MPH** or less depending on type of terrain.
- Place *chocked blocks* underneath wheels to prevent ***rolling,*** while parked, if disconnected from towing vehicle.
- Inflate tires to correct pressure, inspect tires for cuts, and excessive wear. See Table 16 (Tire Wear Troubleshooting).
- When towing of the mixer is required, place the drum in the up position (mouth facing upwards).
- **ALWAYS** make sure that the fuel valve lever is in the **OFF** position (gasoline models only).
- Check wheel mounting lug nuts with a **torque wrench**. Torque wheel lug nuts as described in the maintenance section of this manual.
- Check tightness of U-clamp nuts, torque suspension hardware as referenced in the maintenance section of this manual.
- Avoid sudden stops and starts. This can cause skidding, or jackknifing. Smooth, gradual starts and stops will improve gas milage.
- Avoid sharp turns to prevent rolling.

CAUTION:



If the mixer tow bar is deformed or damaged replace entire tow bar. **NEVER** tow the mixer with a defective tow bar. There exist the possibility of the trailer separating from the towing vehicle.

Tow Bar to Vehicle Connection (Coupler Only)

1. Check the vehicle hitch ball, and mixer's coupler for signs of wear or damage. Replace any parts that are worn or damaged before towing.
2. Use only a 2-inch ball diameter (towing vehicle), this will match the mixer's 2-inch coupler. Use of any other ball diameter will create an extremely dangerous condition which can result in separation of the coupler and ball or ball failure.
3. After tow bar has been connected to mixer (see next page), attach mixer's coupler to the hitch ball on the towing vehicle securely and make sure the lock lever is in the down position (locked).

Mixer Tow Bar Vehicle Connection (Pintle and Loop)

1. Make sure the bumper on the towing vehicle is equipped to handle either a pintle or loop type tow bar configuration.
2. After tow bar has been connected to mixer (see next page), secure either type of tow bar to the towing vehicle, following state and county towing regulations.
3. As a minimum, use a 1/2-inch bolt and nylock nut grade 5 when securing either tow bar to the towing vehicle,

CAUTION:

NEVER ! tow the mixer with the safety chain removed. The safety chain is intended to prevent complete separation of the mixer from the towing vehicle in the event of a tow bar failure.

Reference Figure 5 for the installation of the ***Safety Chain***.

Tow Bar to Mixer Connection

1. Insert the tow bar through the round opening at the bottom of the mixer stand.

   Align the hole on the tow bar with the hole on the mixer frame, and insert 1/2-inch bolt through tow bar and frame. Secure tow bar to frame with 1/2-inch nylock nut. Tighten to 40 ft.-lbs.

2. Route the safety chain through the holes just above the tow bar, located on each side of the mixer stand.

   Loop the chain together and place under the tow bar. Secure the loop with the connector link.

3. Extend the safety chain along the length of the tow bar, looping it through the tow bar's connector link. Remove any excess chain slack.

4. Connect the free end of (clevis safety hook) the safety chain to the towing vehicle. ***Remember it is critical that the length of the chain be properly adjusted***, to prevent the ***draw bar*** and the front of the mixer stand from dropping to the the ground (contact) in the event the draw bar becomes disconnected from the towing vehicle.

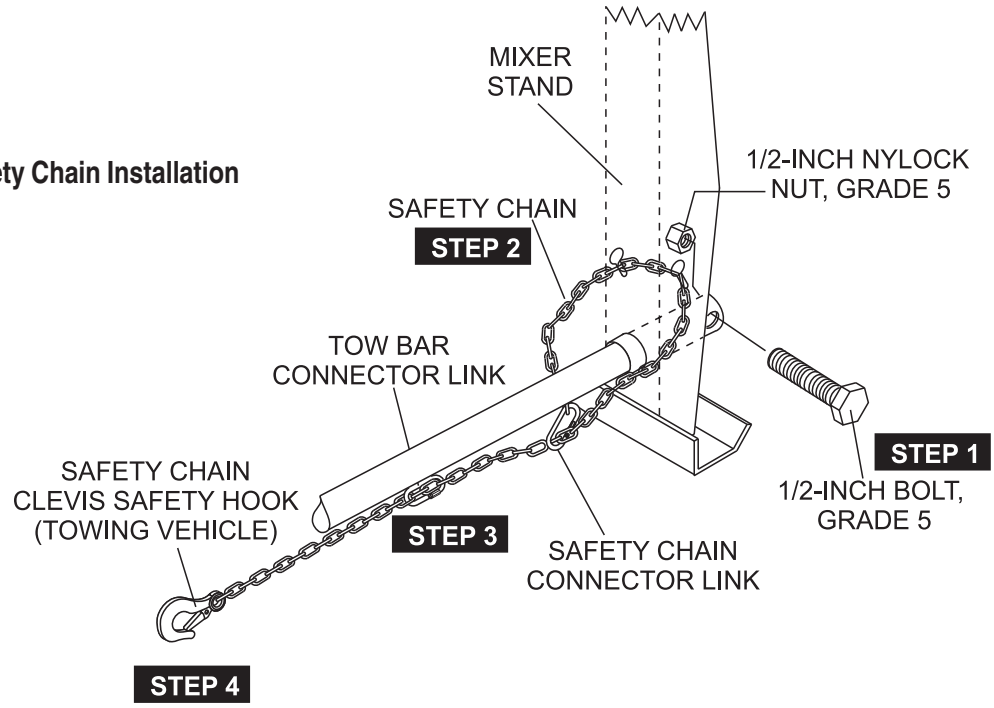

Figure 5. Tow Bar and Safety Chain Installation

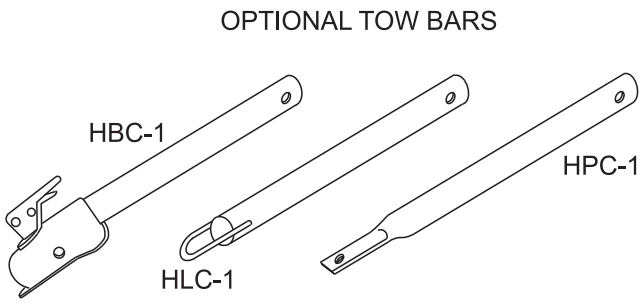

Electric Motor

For maintenance care and operation of the electric motor, refer to your electric motor instruction booklet furnished with the electric motor.

Protect the electric motor from dust as much as possible and keep ventilating openings clean.

CAUTION:

- **DO NOT** spray water at any time on the ***electric motor***.
- **DO NOT** operate electric motor in a explosive environment.

The electric motor used in this mixer is a single-phase 1.5 HP motor. The input voltage requirement for this motor is either 115 or 230 VAC only.

Electric Motor Connection

A 12 inch electrical cable (Figure 2) with a pigtail at one end is provided with the electrical motor for hookup to a power source. Table 1. shows the required NEMA connector for the desired motor horsepower rating. In addition, Table 2 also shows the matching NEMA approved connector for the required extension cord.

ALWAYS, make certain that the power source required for the electric motor is ***correct*** and always use the correct NEMA configuration plug. ***Failure*** to supply the correct voltage to the motor can severely damage the motor.

The electric motor supplied with the mixer is configured from the factory for 115 VAC grounded operation. Make certain that the correct size grounded (3-wires) extension cord is used. See Table 5.

Motors can burn out when the line voltage falls 10% below the voltage rating of the motor. Failure to use proper voltage will cause the motor to overheat and actuate the overload switch.

If overload protection should actuate because of improper voltage or any other malfunction, turn the main switch on the motor to the "**OFF**" position and correct the problem, press the reset switch button, and turn the main switch to the "**ON**" position.

Table 5. Recommended Extension Cord Sizes

Electric Motor	Input Voltage	50 ft. (15.24 m)	75 ft. (22.86 m)	100 ft. (30.48 m)	200 ft. (60.96 m)
1.5 HP	115 VAC	No. 12	No. 10	No. 8	No. 6
	230 VAC	No. 14	No. 12	No. 12	No. 8

Electric Motor Voltage Change Switch

1. ***ALWAYS*** make certain the electric motor's **ON/OFF** switch is in the "**OFF**" position and the power cord has been disconnected from the power source.
2. Remove the voltage change lock-out bolt and nut (Figure 6). Change the position of the ***voltage change toggle switch*** from 115 VAC to 230 VAC. The mixer is factory wired for 115 VAC operation.
3. Re-install the voltage change lock-out bolt and nut.

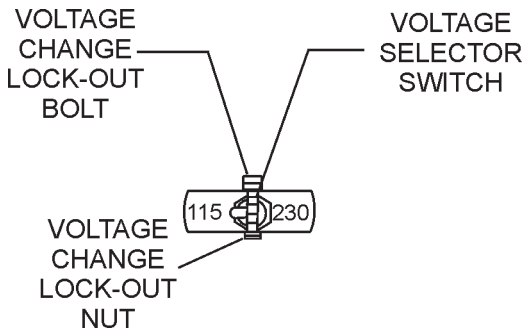

Figure 6. Voltage Change Switch

4. ***Important!,*** when changing the input voltage to the electric motor from 115 to 230 VAC, the ***plug*** on the electric motor power cord must also be changed. See Table 6 and Figure 7.

Table 6. Electric Motor Wiring Information

Motor Horsepower Rating	115-230 VAC - Single Phase	
	NEMA Plug Connector	Mating NEMA Receptacle Connector
1.5 HP (115 VAC)	L5-20P P/N EM940537	L5-20R P/N EM940538
1.5 HP (230 VAC)	L6-20P P/N 940539	L6-20R P/N 940540

NOTE

NEVER! *disable or disconnect the **ON/OFF** switch on the electric motor. It is provided for operator safety. Injury may result if it is disable, disconnected or improperly maintained.*

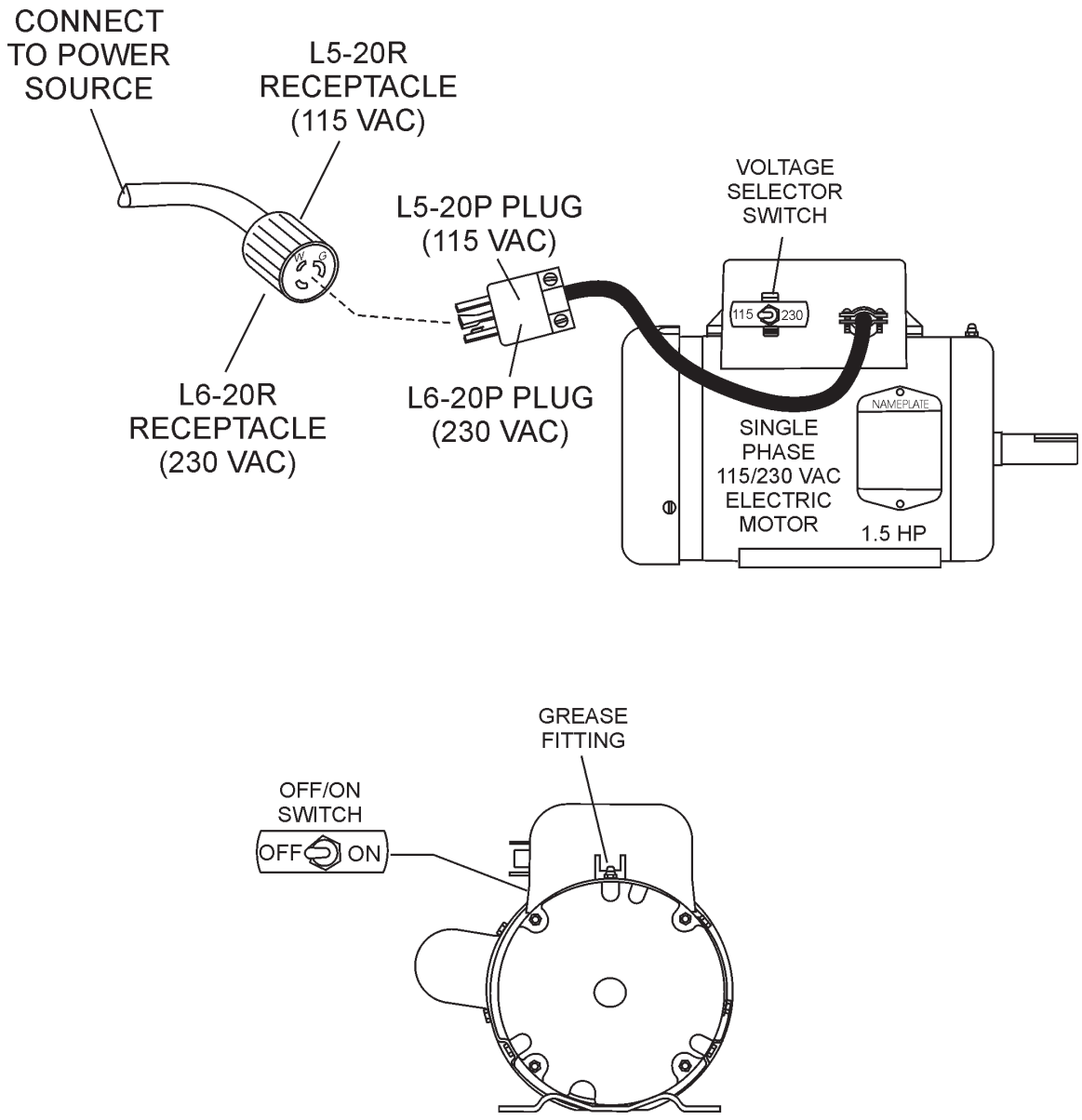

Figure 7. Single Phase Electric Motor with 12 inch Pigtail Cable

Before Starting

1. Read safety instructions at the beginning of manual.
2. Clean the ***mixer***, removing dirt and dust, particularly the engine cooling air inlet, carburetor and air cleaner.
3. Check the air filter for dirt and dust. If air filter is dirty, replace air filter with a new one as required.
4. Check carburetor for external dirt and dust. Clean with dry compressed air.
5. Check fastening nuts and bolts for tightness.

Engine Oil Check

1. To check the engine oil level, place the mixer on secure level ground with the engine stopped.
2. Remove the filler dipstick from the engine oil filler hole (Figure 8) and wipe it clean.

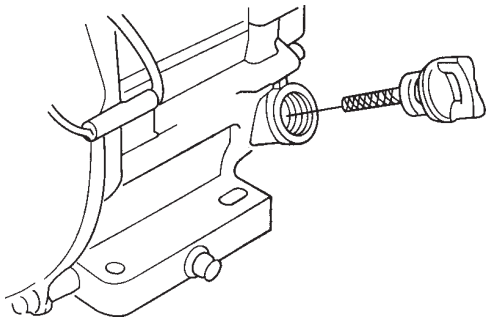

Figure 8. Engine Oil Dipstick (Removal)

3. Insert and remove the dipstick without screwing it into the filler neck. Check the oil level shown on the dipstick.
4. If the engine oil level is low (Figure 9), fill to the edge of the oil filler hole with the recommended oil type (Table 7). See Table 2 for the oil capacity of your type engine.

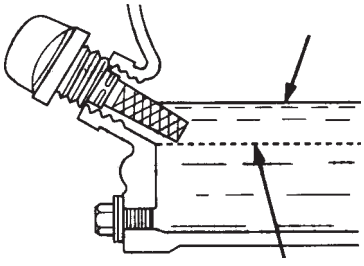

Figure 9. Engine Oil Dipstick (Oil Level)

Table 7. Oil Type		
Season	**Temperature**	**Oil Type**
Summer	25°C or Higher	SAE 10W-30
Spring/Fall	25°C~10°C	SAE 10W-30/20
Winter	0°C or Lower	SAE 10W-10

Explosive Fuel

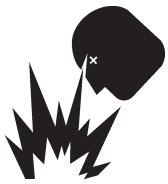

Fuel Check

If your mixer has a gasoline engine, determine if the engine fuel is low. If fuel is low, remove the fuel filler cap and fill with ***unleaded*** gasoline. Motor fuels are highly flammable and can be dangerous if mishandled. **DO NOT** smoke while refueling. **DO NOT** attempt to refuel the trowel if the engine is ***hot!*** or ***running***.

1. Remove the gasoline cap located on top of fuel tank.
2. Visually inspect to see if fuel level is low. If fuel is low, replenish with unleaded fuel.
3. When refueling, be sure to use a strainer for filtration. **DO NOT** top-off fuel. Wipe up any spilled fuel.

V-belt Check

A worn or damaged V-belt can adversely affect the performance of the mixer. If a V-belt is defective or worn simply replace the V-belt as outlined in the maintenance section of this manual.

Blade Check

Check for worn blades. If using a steel tub and the blades are worn, replace the entire tub assembly. Remember the blades are welded to tub.

If using a plastic tub, replace the blades using the part numbers referenced in the parts section of this manual.

Start/Stop Switches

This mixer has been equipped with a start/stop switches for both the gasoline and electric motor mixers. These switches should be tested every time the engine or motor is started.

Grease Fittings (Zerk)

Check the zerk grease fittings (Figure 27) as shown in the maintenance section of this manual. These grease fittings lubricate the ***handwheel*** and the ***yoke mechanism***.

Starting the Engine (Gasoline Only)

The following steps outline the procedure for starting the engine. Depending on the type of engine employed in the mixer the steps may vary slightly. If your mixer has an electric motor disregard this section.

1. Move the fuel shut-off lever (Figure 10) to the **ON** position.

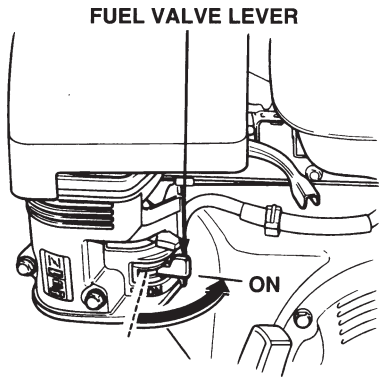

Figure 10. Fuel Shut-OFF Lever

2. To start a cold engine, move the choke lever (Figure 11) to the **CLOSED** position.

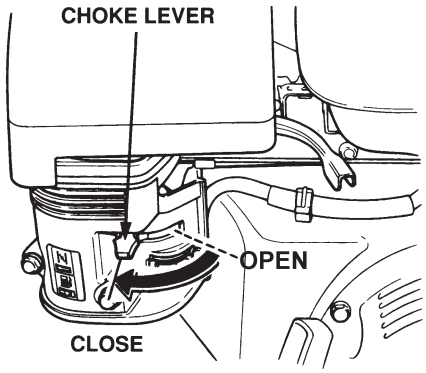

Figure 11. Choke Lever

3. Move the throttle lever (Figure 12) away from the slow position, about 1/3 of the way toward the fast position.

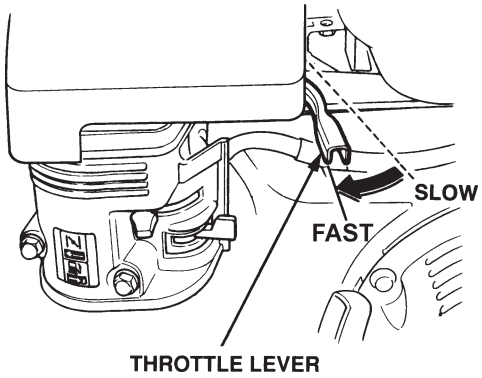

Figure 12. Throttle Lever

4. Turn the engine switch (Figure 13) to the **ON** position.

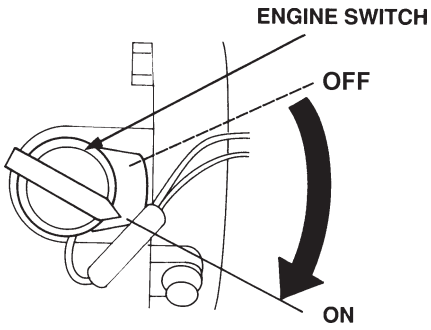

Figure 13. Engine ON/OFF Switch

5. Located at the rear of the mixer frame is the main ***start/stop*** button (Figure 14). Pull this button outward to start the engine.

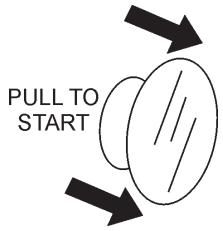

Figure 14. Engine Start/Stop Button

6. Pull the ***starter grip*** (Figure 15) lightly until you feel resistance, then pull briskly. The drum should be rotating at this time.

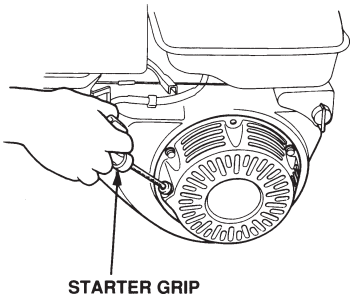

Figure 15. Starter Grip

Initial Start-up Instructions (Electric Motor)

Starting

CAUTION:

DO NOT attempt to operate the mixer until the Safety, General Information and Inspection sections have been read and understood.

1. Before starting, make sure mixer is positioned on a secure flat surface to prevent rolling.
2. Use an extension cord (see Table 5) of adequate current carrying capacity, insert the electric motor's power plug into one end of the extension cord.
3. ***NEVER!*** use a ***worn*** or ***frayed*** extension cord.
4. ***NEVER!*** operate mixer with V-belt cover removed.

DANGER

NEVER! touch the power cord (Figure 16) with ***wet hands*** or while ***standing in water*** when it is connected to a power source. The possibly exists of electrical shock (electrocution) even death. ***NEVER!*** spray water directly on the electric motor.

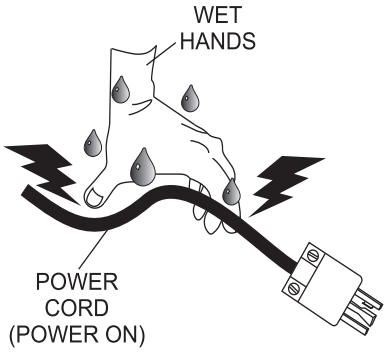

Figure 16. Extension Cord (Wet Hands)

NOTE

To prevent personnel from tripping over the extension cord, position the extension cord so that it lays flat and is not curled underneath the mixer.

5. Place the voltage selector switch (Figure 17) in the position that is in accordance with voltage listed on the electric motor's nameplate. The electric motor's are shipped from the factory with the with the voltage selector switch placed in the 115 VAC position.

   If 230 VAC is required, remove the locking bolt and nut and flip the voltage selector toggle switch to the 230 VAC position. Reinstall the locking bolt and nut to prevent the toggle switch from being accidently tripped.

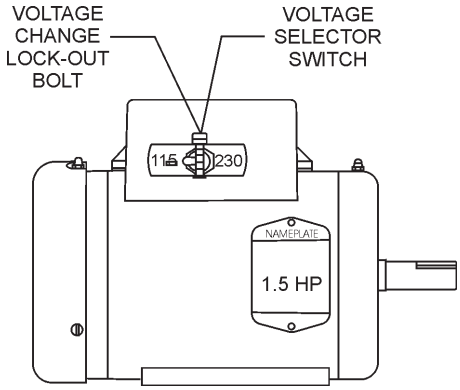

Figure 17. Voltage Change Switch (115 VAC Position)

6. Plug the other end of the extension cord into either a 115 or 230 VAC power source (look at position of voltage selector switch). Remember to read the nameplate to determine the motor's input voltage requirement.

WARNING:

ALWAYS read the label on the electric motor before applying power. The label will indicate the correct power requirements for the motor. Remember the use of an incorrect input voltage will severely damage the electric motor.

Starting the Electric Motor

1. Set the electric motor's **ON/OFF** switch (Figure 18) to the **ON** position.

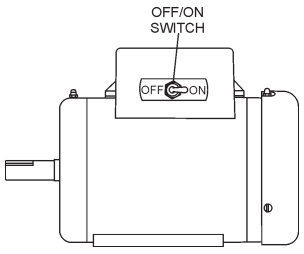

Figure 18. Electric Motor ON/OFF Switch (ON Position)

Operation

1. To position the tub, make sure the mixer is placed on firm level ground, then ***pull up*** on the ***dump latch*** (Figure 19) and turn the ***hand wheel*** until the tub is at the desired position. Once the tub is at the desired position, ***pull down*** on the dump latch to lock the tub in position.

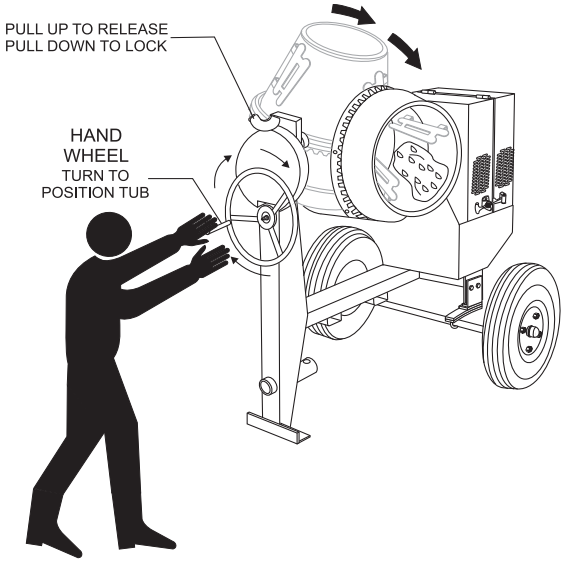

Figure 19. Mixing Drum Positioning

CAUTION:

NEVER stand in front or behind the mixing drum while it is being placed in the dump position. Stay clear of the mixing drum while it is being positioned.

2. As the drum rotates, use a shovel (Figure 20) to place the cement mix inside the drum, add water as required. Be careful to only place the ***tip*** of the shovel inside the drum.

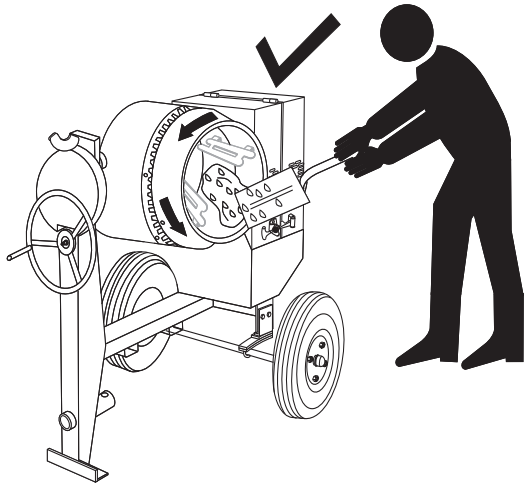

Figure 20. Filling Mixing Drum

3. Placing the shovel all the way inside the drum (Figure 21) will cause the shovel to strike the blades. This condition will make the shovel rotate, and could cause injury to personnel. **NEVER** place hands inside the mixing drum while it is rotating.

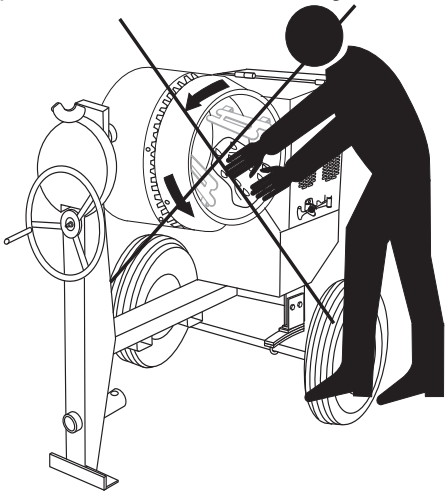

Figure 21. Filling Mixing Drum

Stopping the Mixer (Gasoline)

1. Push the main ***start/stop*** switch (Figure 22) inward to stop the engine.

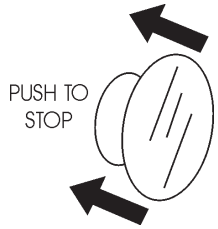

Figure 22. Start/Stop Button (Stop Position)

2. Place fuel shut-off lever in the **OFF** position.
3. Clean drum of all debris and foreign matter.

Stopping the Mixer (Electric)

1. Place the electric motor's ***ON/OFF*** switch (Figure 23) in the **OFF** position.

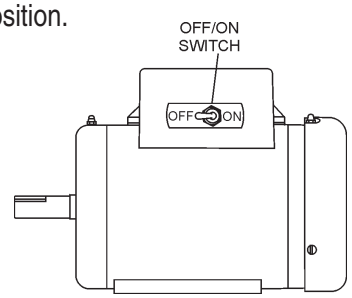

Figure 23. Electric Motor ON/OFF Switch (OFF Position)

2. Disconnect the electric motor's extension cord from its power source.
3. Clean drum of all debris and foreign matter.

Use Table 8 as a general maintenance guideline when servicing your engine. For more detail engine maintenance information, refer to the engine owner's manual supplied with your engine.

Table 8. Engine Maintenance Schedule

DESCRIPTION (3)	OPERATION	BEFORE	FIRST MONTH OR 10 HRS.	EVERY 3 MONTHS OR 25 HRS.	EVERY 6 MONTHS OR 50 HRS.	EVERY YEAR OR 100 HRS.	EVERY 2 YEARS OR 200 HRS.
Engine Oil	CHECK	X					
	CHANGE		X				
Air Cleaner	CHECK	X					
	CHANGE			X (1)			
All Nuts & Bolts	Re-tighten If Necessary	X					
Spark Plug	CHECK-CLEAN				X		
	REPLACE						X
Cooling Fins	CHECK				X		
Spark Arrester	CLEAN					X	
Fuel Tank	CLEAN					X	
Fuel Filter	CHECK					X	
Idle Speed	CHECK-ADJUST					X (2)	
Valve Clearance	CHECK-ADJUST						X (2)
Fuel lines	CHECK	Every 2 years (replace if necessary) (2)					

(1) Service more frequently when used in **DUSTY** areas.

(2) These items should be serviced by your service dealer, unless you have the proper tools and are mechanically proficient. Refer to the HONDA or ROBIN Shop Manual for service procedures.

(3) For commercial use, log hours of operation to determine proper maintenance intervals.

Maintenance

Perform the scheduled maintenance procedures as defined by Table 6 and below:

DAILY

- Thoroughly remove dirt and oil from the engine and control area. Clean or replace the air cleaner elements as necessary. Check and retighten all fasteners as necessary. Check the gearbox for oil leaks. Repair or replace as needed.

WEEKLY

- Remove the fuel filter cap and clean the inside of the fuel tank.
- Remove or clean the filter at the bottom of the tank.
- Remove and clean the spark plug (Figure 24), then adjust the spark gap to 0.024 ~0.028 inch (0.6~0.7 mm). This unit has electronic ignition, which requires no adjustments.

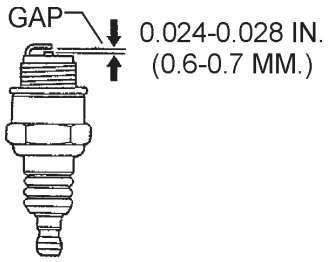

Figure 24. Spark Plug Gap

ENGINE OIL

1. Drain the engine oil when the oil is ***warm*** as shown in Figure 25.
2. Remove the oil drain bolt and sealing washer and allow the oil to drain into a suitable container.
3. Replace engine oil with recommended type oil as listed in Table 7. For engine oil capacity, see Table 2 (engine specifications). **DO NOT** overfill.
4. Install drain bolt with sealing washer and tighten securely.

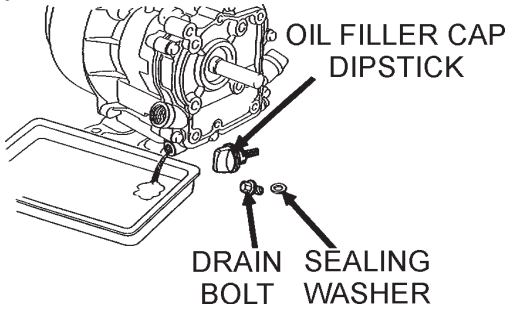

Figure 25. Engine Oil (Draining)

DANGER :



DO NOT use gasoline as a cleaning solvent, because that would create a risk of fire or explosion.

ENGINE AIR CLEANER

1. Remove the air cleaner cover and foam filter element as shown in Figure 26.
2. Tap the paper filter element (Figure 34) several times on a hard surface to remove dirt, or blow compressed air [not exceeding 30 psi (207 kPa, 2.1 kgf/cm^2)] through the filter element from the air cleaner case side. ***NEVER*** brush off dirt. Brushing will force dirt into the fibers. Replace the paper filter element if it is excessively dirty.
3. Clean foam element in warm, soapy water or nonflammable solvent. Rinse and dry thoroughly. Dip the element in clean engine oil and completely squeeze out the excess oil from the element before installing.

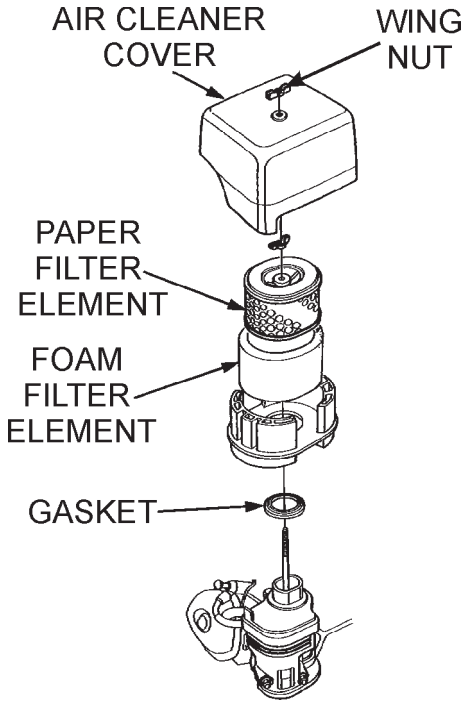

Figure 26. Engine Air Cleaner

Ball Socket and Clamp Face Maintenance

1. If the towing vechicle is equipped with a ball socket, smear socket periodically with multi-purpose grease. This will keep the ball socket well lubricated.
2. Periodically oil ***pivot points*** and ***clamp face*** surfaces of coupler with SAE 30 WT. motor oil.
3. When parking or storing your mixer. Keep the coupler off the ground so dirt will not build up in the ball socket.

Grease Fittings (Zerk) Maintenance (Mixer)

There are 3 grease (Figure 27) fittings that will require lubrication. Lubricate these fittings ***once a week***. Use lithium base grease, grade N0.1.

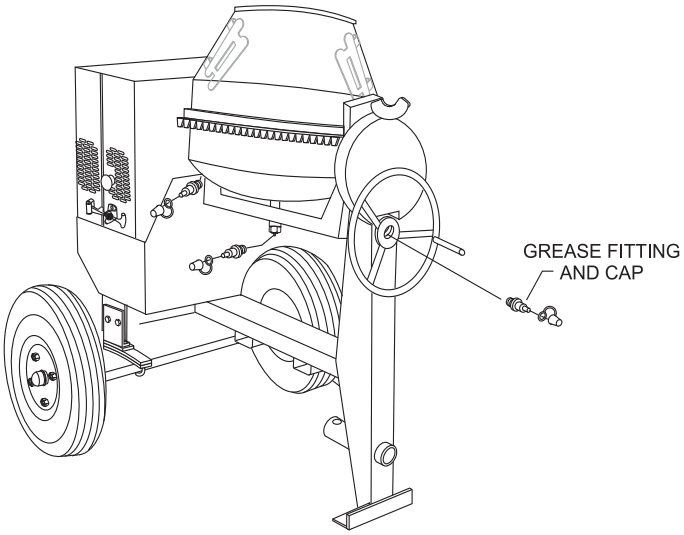

Figure 27. Grease Fittings Mixer

Grease Fittings (Zerk) Maintenance (Electric Motor)

1. There are two grease (Figure 28) fittings at each end of the electric motor that will require lubrication. Lubricate these fittings about ***every 16 months***.

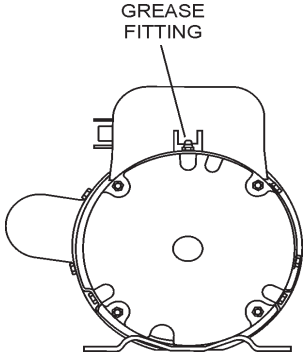

Figure 28. Grease Fittings Electric Motor

2. Use Poleyrex EM (Exxon Mobil) or equalivant lubricant. Clean grease fitting, apply grease gun to fitting (1/2 shot). Remember too much grease or injecting grease too quickly can cause premature bearing failure. Slowly apply the recommended amount of grease, taking a miniute or so to apply.

Wheel Bearings

1. After every 3 months of operation, remove the hub dust cap and inspect the wheel bearings (Figure 29). Once a year, or when required, disassemble the wheel hubs remove the old grease and repack the bearings forcing grease between rollers, cone and cage with a good grade of high speed wheel bearing grease (***never*** use grease heavier than 265 A.S.T.M. penetration ("No. 2.")

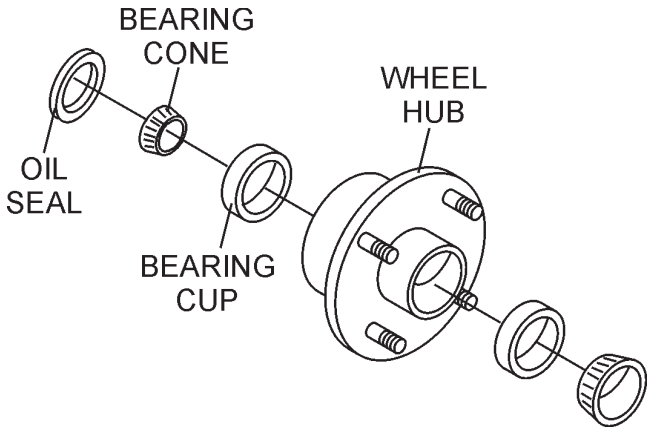

Figure 29. Wheel Hub and Bearings

2. Fill the wheel hub (Figure 29) with grease to the inside diameter of the outer races and also fill the hub grease cap. Reassemble the hub and mount the wheel. Then tighten the adjusting nut, at the same time turn the wheel in both directions, until there is a slight bind to be sure all the bearing surfaces are in contact.

   Then back-off the adjusting nut 1/6 to 1/4 turn or to the nearest locking hole or sufficiently to allow the wheel to rotate freely within limits of .001" to .010" end play. Lock the nut at this position. Install the cotter pin and dust cap, and tighten all hardware.

Mixer Cleaning

1. For thorough mix and longer drum life, ***always*** wash drum out after each use.
2. ***NEVER!*** pour or spray water over the engine or electric motor.

Tires/Wheels/Lug Nuts

Tires and wheels are a very important and critical components of the trailer. When specifying or replacing the trailer wheels it is important the wheels, tires, and axle are properly matched.

CAUTION:

DO NOT attempt to repair or modify a wheel. **DO NOT** install an inter-tube to correct a leak through the rim. If the rim is cracked, the air pressure in the inter-tube may cause pieces of the rim to explode (break-off) with great force and can cause serious eye or bodily injury.

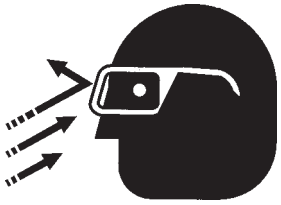

Tires Wear/Inflation

Tire inflation pressure is the most important factor in tire life. Pressure should be checked cold before operation. **DO NOT** bleed air from tires when they are hot. Check inflation pressure weekly during use to insure the maximum tire life and tread wear.

Table 9 (Tire Wear Troubleshooting) will help pinpoint the causes and solutions of tire wear problems.

CAUTION:

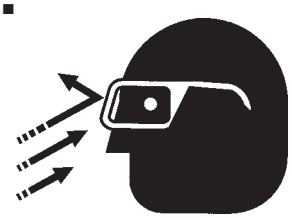

NOTE

ALWAYS wear safety glasses when removing or installing force fitted parts. Failure to comply may result in serious injury.

TABLE 9. TIRE WEAR TROUBLESHOOTING

WEAR PATTERN		CAUSE	SOLUTION
	Center Wear	Over Inflation	Adjust pressure to particular load per tire manufacturer.
	Edge Wear	Under Inflation	Adjust pressure to particular load per tire manufacturer.
	Side Wear	Loss of chamber or overloading.	Make sure load does not exceed axle rating. Align wheels.
	Toe Wear	Incorrect toe-in	Align wheels.
	Cupping	Out-of balance	Check bearing adjustment and balance tires.
	Flat Spots	Wheel lockup & tire skidding.	Avoid sudden stops when possible and adjust brakes.

Suspension

The leaf suspension springs and associated components (Figure 30) should be visually inspected every 6,000 miles for signs of excessive wear, elongation of bolt holes, and loosening of fasteners. Replace all damaged parts (suspension) immediately. Torque locknut securing U-clamp to spring leaf between 45 and 50 ft.-lbs.

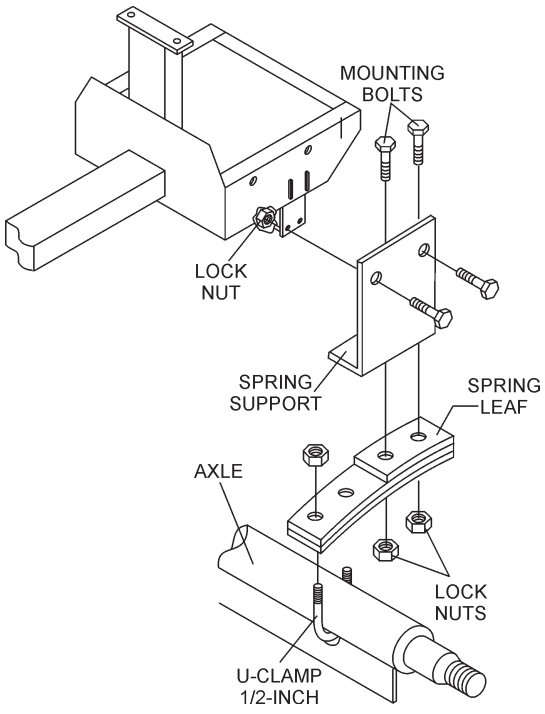

Figure 30. Suspension Components

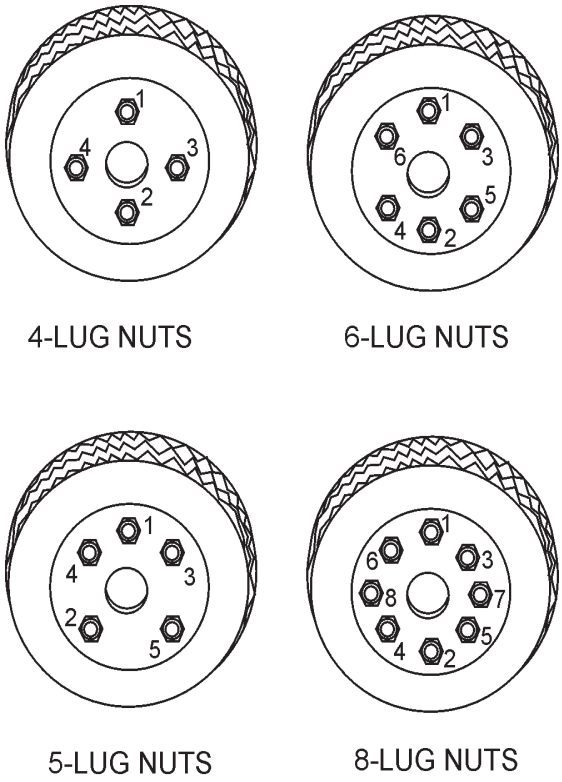

Figure 31. Wheel Lug Nuts Tightening Sequence

Lug Nut Torque Requirements

It is extremely important to apply and maintain proper wheel mounting torque on the trailer. Be sure to use only the fasteners matched to the cone angle of the wheel. Proper procedure for attachment of the wheels is as follows:

1. Start all wheel lug nuts by hand.
2. Torque all lug nuts in sequence. See Figure 31. **DO NOT** torque the wheel lug nuts all the way down. Tighten each lug nut in 3 separate passes as defined by Table 10.
3. After first road use, retorque all lug nuts in sequence. Check all wheel lug nuts periodically.

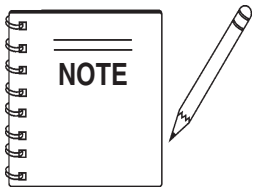

NEVER! use an pneumatic air gun to tighten wheel lug nuts.

Mixer Storage

For storage of the mixer for over 30 days, the following is recommended:

- Drain the fuel tank completely, or add STA-BIL to the fuel.
- Run the engine until the fuel is completely consumed**.**
- Completely drain used oil from the engine crankcase and fill with fresh clean oil, then follow the procedures described in the engine manual for engine storage.
- Clean the entire mixer and engine compartment.
- Place the mixing drum in the down position (mouth facing downward).
- Cover the mixer and place it a clean dry area, that is protected from harsh elements.

NOTE PAGE

MC-64P/S CONCRETE MIXER — TROUBLESHOOTING (ENGINE)

Practically all breakdowns can be prevented by proper handling and maintenance inspections, but in the event of a breakdown, please take a remedial action following the diagnosis based on the Troubleshooting (Tables 10 and 11) information shown below and on the next page. If the problem cannot be remedied, please leave the unit just as it is and consult our company's business office or service plant.

TABLE 10. ENGINE TROUBLESHOOTING

SYMPTOM	POSSIBLE PROBLEM	SOLUTION
Difficult to start		
Fuel is available but spark plug will not ignite. (Power available at high tension cable).	Ignition plug being bridge?	Check ignition system.
	Carbon deposit at ignition?	Clean or replace ignition.
	Short circuit due to defective insulators?	Replace insulators.
	Improper spark gap?	Set spark plug gap to the correct gap.
Fuel is available but spark plug will not ignite. (Power **NOT** available at high tension cable).	Short circuit at stop switch?	Check stop switch circuit. Replace stop switch if defective.
	Ignition coil defective?	Replace ignition coil.
Fuel is available and spark plug ignites (compression **normal)**.	Muffler clogged with carbon deposits?	Clean or replace muffler.
	Fuel in use inadequate (water, dust)?	Flush fuel sytem and replace with fresh fuel.
	Air Cleaner clogged?	Clean or replace air cleaner.
Fuel is available and spark plug ignites (compression **low**).	Defective cylinder head gasket?	Tighten cylinder head bolts or replace head gasket.
	Cylinder worn?	Replace cylinder.
	Spark plug loose?	Tighen spark plug.
Operation not satisfactory		
Not enough power available (compression normal, no miss-firing).	Air cleaner clogged?	
	Air in fuel line?	Bleed (remove air) from fuel line.
	Fuel level in carbureator float chamber improper?	Adjust carbureator float
	Carbon deposits in cylinder?	Clean or replace cylinder
Not enough power available (compression normal, miss-firing).	Ignition coil defective?	Flush fuel sytem and replace with fresh fuel.
	Ignition plug often shorts?	Replace ignition wires, clean ignition.
	Fuel in use inadequate (water, dust)?	Flush fuel sytem and replace with fresh fuel.
Engine overheats.	Excessive carbon depostion in combustion chamber?	Clean or replace crankcase.
	Exhaust or muffler clogged with carbon.	Clean or replace muffler.
	Spark plug heat value incorrect?	Replace spark plug with correct type spark plug.

TABLE 10. ENGINE TROUBLESHOOTING (Continued)		
SYMPTOM	**POSSIBLE PROBLEM**	**SOLUTION**
Operation not satisfactory		
Rotational speed fluctuates.	Governor adjustment improper?	Adjust governor to correct lever.
	Governor spring defective?	Clean or replace ignition.
	Fuel flow erratic?	Check fuel line.
	Air taken in through suction line?	Check suction line.
Recoil starter not working properly.	Dust in rotating part?	Clean recoil starter assembly.
	Spring spring failure?	Replace sprial spring.

TABLE 11. MIXER TROUBLESHOOTING		
SYMPTOM	**POSSIBLE PROBLEM**	**SOLUTION**
Drum rotates rough.	Defective ring gear?	Check that the ring gear and bearings are not worn . Replace as necessary.
	Defective pinion gear?	Check that the pinion gear and bearings are not worn . Replace as necessary.
	Worn V-belt?	Replace V-belt.
	Loose pulley?	Tighten or replace pulley.
Drum does not rotate at all.	Incorrect or no voltage being supplied to electric motor?	Check that the electric motor has the correct supply voltage.
	Power to electric motor?	Inspect power source and extension cord. Push reset button on electric motor. Make sure correct voltage is being supplied to motor.
	Fuel?	Check level of fuel in fuel tank. Add fuel if necessary. Make sure fuel is being supplied to the engine. Check to ensure that the fuel filter is not clogged.
	Broken V-belt?	Replace V-belt.
	Defective ring or pinion gears?	Check that the gears and bearings are not broken. Replace as necessary.
	Defective electric motor?	Replace electric motor.

EXPLANATION OF CODE IN REMARKS COLUMN

The following section explains the different symbols and remarks used in the Parts section of this manual. Use the help numbers found on the back page of the manual if there are any questions.

NOTICE

The contents and part numbers listed in the parts section are subject to change **without notice**. Multiquip does not guarantee the availability of the parts listed.

SAMPLE PARTS LIST

NO.	PART NO.	PART NAME	QTY.	REMARKS
1	12345	BOLT	1	INCLUDES ITEMS W/%
2%		WASHER, 1/4 IN		NOT SOLD SEPARATELY
2%	12347	WASHER, 3/8 IN	1	MQ-45T ONLY
3	12348	HOSE	A/R	MAKE LOCALLY
4	12349	BEARING	1	S/N 2345B AND ABOVE

NO. Column

Unique Symbols — All items with same unique symbol

(@, #, +, %, or >) in the number column belong to the same assembly or kit, which is indicated by a note in the "Remarks" column.

Duplicate Item Numbers — Duplicate numbers indicate multiple part numbers, which are in effect for the same general item, such as different size saw blade guards in use or a part that has been updated on newer versions of the same machine.

NOTICE

When ordering a part that has more than one item number listed, check the remarks column for help in determining the proper part to order.

PART NO. Column

Numbers Used — Part numbers can be indicated by a number, a blank entry, or TBD.

TBD (To Be Determined) is generally used to show a part that has not been assigned a formal part number at the time of publication.

A blank entry generally indicates that the item is not sold separately or is not sold by Multiquip. Other entries will be clarified in the "Remarks" Column.

QTY. Column

Numbers Used — Item quantity can be indicated by a number, a blank entry, or A/R.

A/R (As Required) is generally used for hoses or other parts that are sold in bulk and cut to length.

A blank entry generally indicates that the item is not sold separately. Other entries will be clarified in the "Remarks" Column.

REMARKS Column

Some of the most common notes found in the "Remarks" Column are listed below. Other additional notes needed to describe the item can also be shown.

Assembly/Kit — All items on the parts list with the same unique symbol will be included when this item is purchased.

Indicated by:

"INCLUDES ITEMS W/(unique symbol)"

Serial Number Break — Used to list an effective serial number range where a particular part is used.

Indicated by:

"S/N XXXXX AND BELOW"
"S/N XXXX AND ABOVE"
"S/N XXXX TO S/N XXX"

Specific Model Number Use — Indicates that the part is used only with the specific model number or model number variant listed. It can also be used to show a part is NOT used on a specific model or model number variant.

Indicated by:

"XXXXX ONLY"
"NOT USED ON XXXX"

"Make/Obtain Locally" — Indicates that the part can be purchased at any hardware shop or made out of available items. Examples include battery cables, shims, and certain washers and nuts.

"Not Sold Separately" — Indicates that an item cannot be purchased as a separate item and is either part of an assembly/kit that can be purchased, or is not available for sale through Multiquip.

MC-64P/S CONCRETE MIXERS 1 TO 3 UNITS WITH HONDA GX160K1QX2 AND GX240K1QA2 ENGINES

Qty.	P/N	Description
2	512265	V-BELT w/GAS ENGINE 5.5 HP
2	493399	V-BELT w/GAS ENGINE 8.0 HP
1	512265	V-BELT w/ELECTRIC MOTOR
1	29713-001	STOP SWITCH w/GAS ENGINE
2	491010	LATCH SET
1	505390	EXPANSION PLUG
2	510956	SPINDLE BEARING CUP
2	510955	SPINDLE BEARING CONES
1	EM505472	SPACER, DRUM (STEEL ONLY)
2	492179	BEARING PINION
2	EM914288	SEAL, AXLE
4	EM903012	BEARING CUP
4	EM903113	BEARING CONE
2	3469	DUST CAP, AXLE
3	9807956846	SPARK PLUG
3	17210ZE1505	AIR FILTER 5.5 HP
3	17210ZE2505	AIR FILTER 8.0 HP
1	17620ZH7023	CAP, FUEL
1	28462ZH8003	ROPE 5.5 HP
1	28462ZEW211	ROPE 8.0 HP

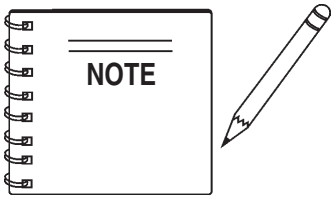

Part numbers on this Suggested Spare Parts List may supercede/ replace the P/N's shown in the test pages of this manual.

NAME PLATE AND DECALS

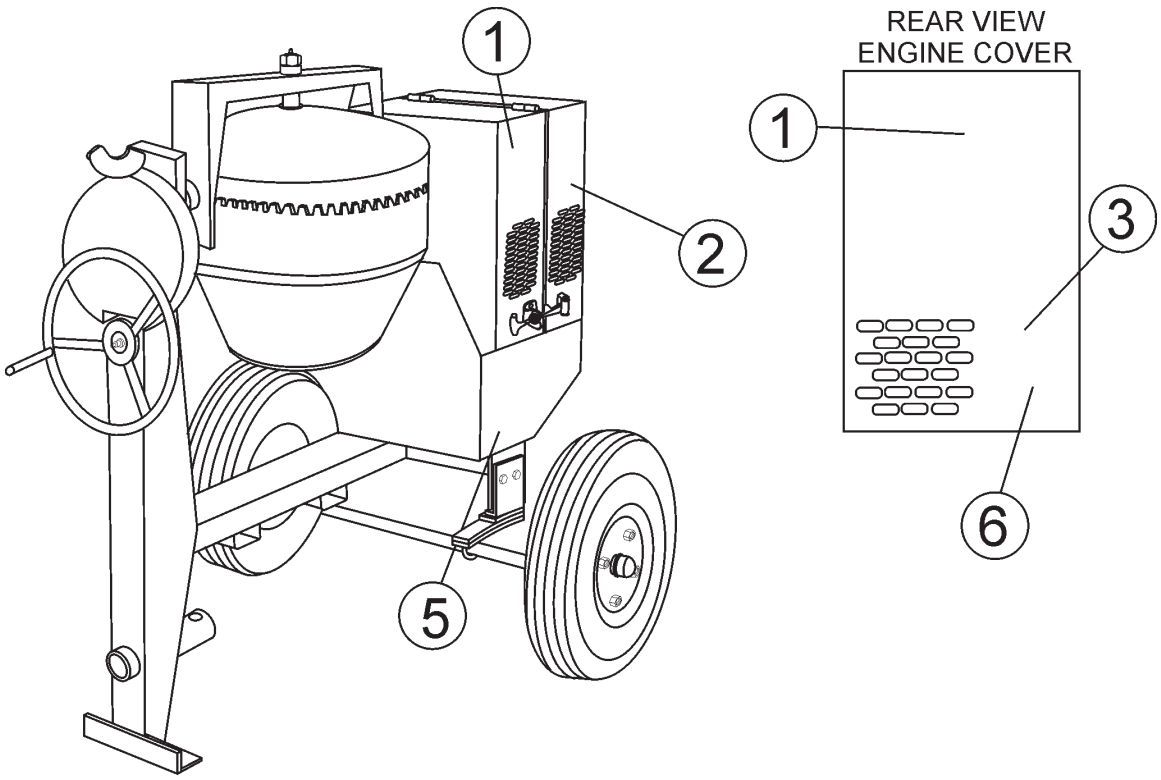

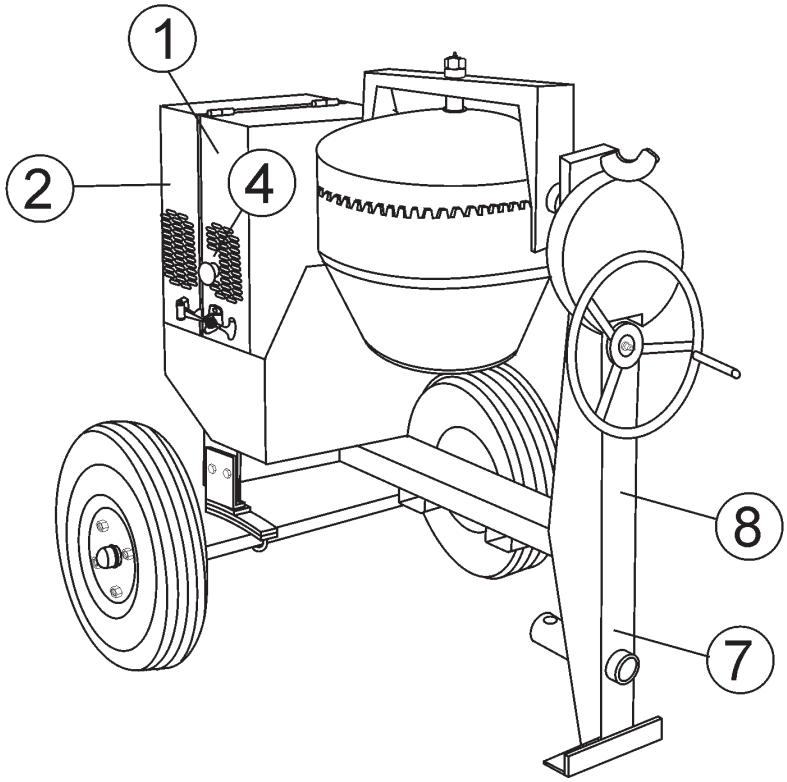

NAME PLATE AND DECALS

NO	PART NO	PART NAME	QTY.	REMARKS
1	512910	MQ MULTIQUIP LOGO	3	
2	CIPDCL160	DECAL, CRUSH WARNING	2	
3	504713	DECAL, SAFETY INSTRUCTIONS	1	
4	EM948630	DECAL, EMERGENCY STOP	1	
5	DCL151	DECAL, TOWING INSTRUCTIONS	1	
6	35137	DECAL, WARNING READ	1	
7	13118	DECAL, POWDER COATED	1	
8		NAMEPLATE	1	..... CONTACT PARTS DEPT.

SEE OPERATION AND SAFETY DECALS PAGE.

PLASTIC BARREL ASSY.

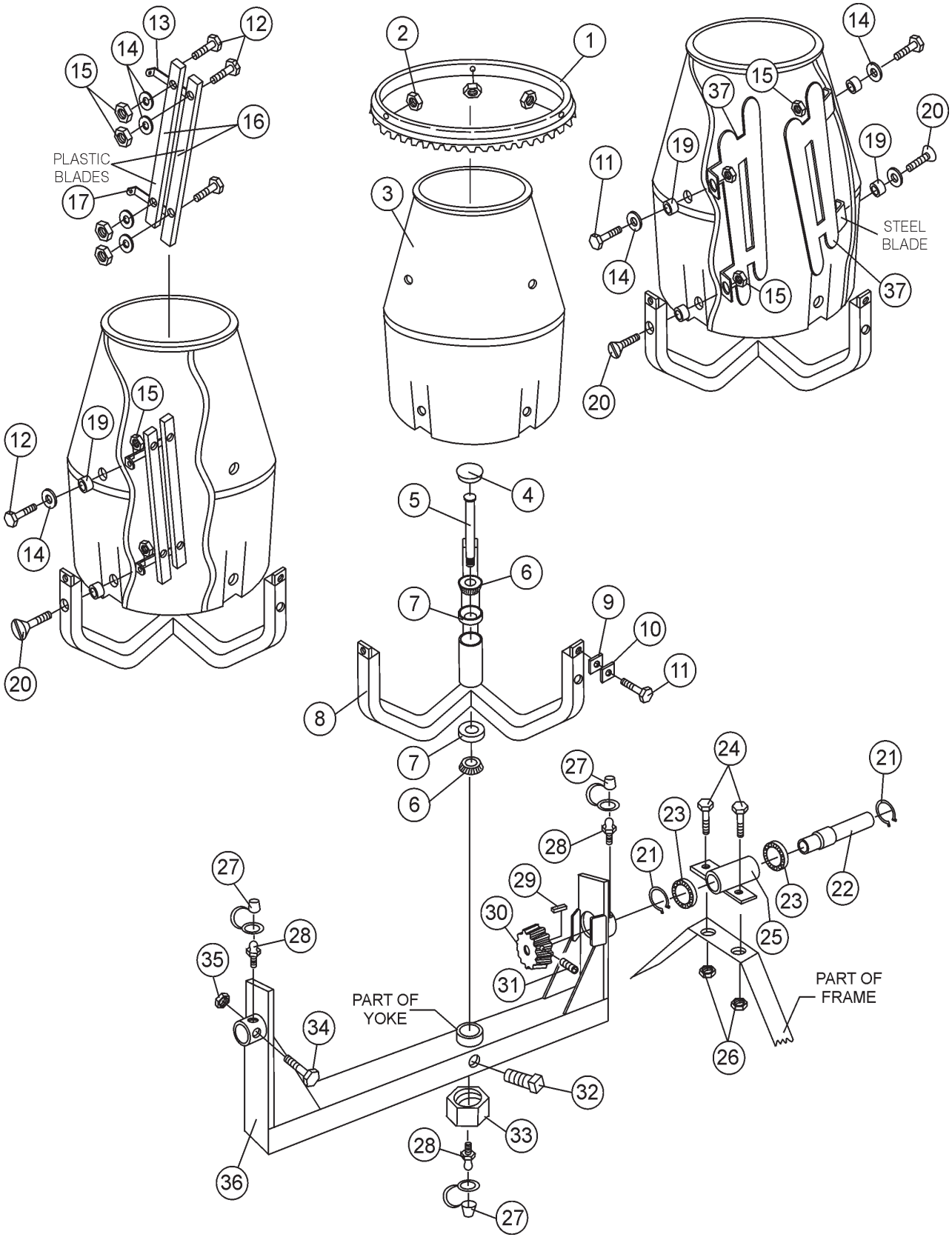

PLASTIC BARREL ASSY.

NO	PART NO	PART NAME	QTY.	REMARK
1	510992	RING GEAR	1	
2	EM969013	NUT, LOCK 3/8" NC	3	
3	507532	BARREL, PLASTIC 6 CU. FT.	1	
4	505390	PLUG, EXPANSION	1	
5	514929	KING PIN	1	
6	510955	SPINDLE BEARING CONE	2	
7	510956	SPINDLE BEARING CUP	2	
8	514927	SUPPORT SPIDER	1	
9	511758	SHIM PLASTIC #14	AR	
10	511759	SHIM PLASTIC #16	AR	
11	492313	BOLT 3/8" NC 1-1/2" G5	3	
12	492378	BOLT 3/8" NC 1-3/4" G5	12	
13	507542	SUPPORT BRACKET, UPPER	3	
14	3019092	WASHER, FLAT	15	
15	EM969013	NUT, HEX 3/8" NC	15	
16	507543	BLADES, PLASTIC	6	
17	507541	SUPPORT BRACKET, LOWER	3	
19	507538	SPACER MC8079	3	
20	508345	CS BOLT, 3/8" NC X 3-1/2" G	3	
21	490962	SNAP RING	2	
22	514515	DRIVE PINION SHAFT	1	
23	492179	BEARING, PINION SHAFT	2	
24	EM963692	BOLT 1/2" NC X 1-1/2" G5	2	
25	502036	HOUSING, JACKSHAFT	1	
26	492584	LOCKNUT, HEX 1/2" NC	2	
27	491008	CAP, GREASE FITTING	3	
28	EM916001	GREASE FITTING 1/8" NPT	3	
29	500214	SQUARE KEY 1/4 X 30 MM	1	
30	514724	DRIVE PINION	1	
31	492467	ALLEN SCREW 5/16 NC 3/8"	1	
32	492491	SET SCREW 1/2" X 1" NC	1	
33	07037-024	NUT, HEX LOWER 1-1/2" NF	1	REPLACES EM968306
34	505079	BOLT 5/8" NC X 1-1/4" NC	1	
35	492586	LOCKNUT, HEX 5/8" NC	1	
36	515104	YOKE	1	
37	515452	STEEL BLADES	3	EFFECTIVE 02/2005

STEEL BARREL ASSY.

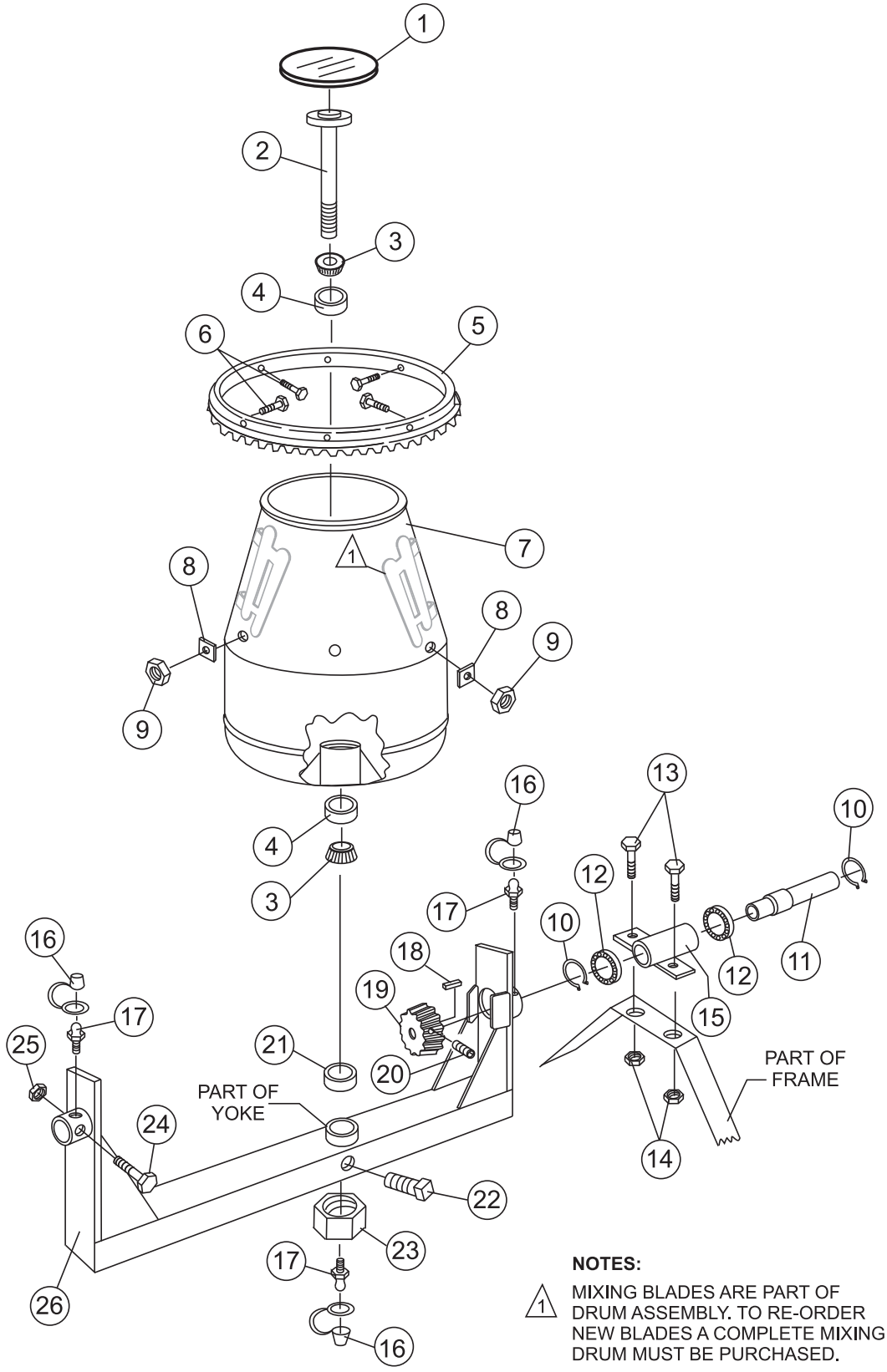

STEEL BARREL ASSY.

NO	PART NO	PART NAME	QTY.	REMARK
1	505390	PLUG, EXPANSION	1	
2	505469	KING PIN	1	
3	510955	SPINDLE BEARING CONE	2	2788 KOYO
4	510956	SPINDLE BEARING CUP	2	2720 KOYO
5	504095	RING GEAR	1	
6	963053	BOLT 3/8" NC 1-1/2" G5	6	
7	505487	BARREL, STEEL 6 CU. FT.	1	
8	511732	SHIM 0.25 THICK	AR	
8	511729	SHIM .100 THICK	AR	
8	511730	SHIM .140 THICK	AR	
8	511731	SHIM .187 THICK	AR	
9	EM969013	NUT, LOCK 3/8” NC	6	
10	490962	SNAP RING	2	
11	514515	DRIVE PINION SHAFT	1	
12	492179	BEARING, PINION SHAFT	2	
13	EM963692	BOLT 1/2" NC X 1-1/2" G5	2	
14	492584	LOCKNUT, HEX 1/2" NC	2	
15	502036	HOUSING, JACKSHAFT	1	
16	491008	CAP, GREASE FITTING	3	
17	EM916001	GREASE FITTING 1/8" NPT	3	
18	500214	SQUARE KEY 1/4" X 30 MM	1	
19	514724	DRIVE PINION	1	
20	492467	ALLEN SCREW 5/16 NC 3/8"	1	
21	EM505472	SPACER, BARREL	1	
22	492491	SET SCREW 1/2" X 1" NC	1	
23	07037-024	NUT, HEX LOWER 1-1/2" NF	1	..... REPLACES EM968306
24	492406	BOLT 5/8" NC X 1-1/2" NC	1	
25	492586	LOCKNUT, HEX 5/8" NC	1	
26	515104	YOKE	1	

MAIN FRAME ASSY.

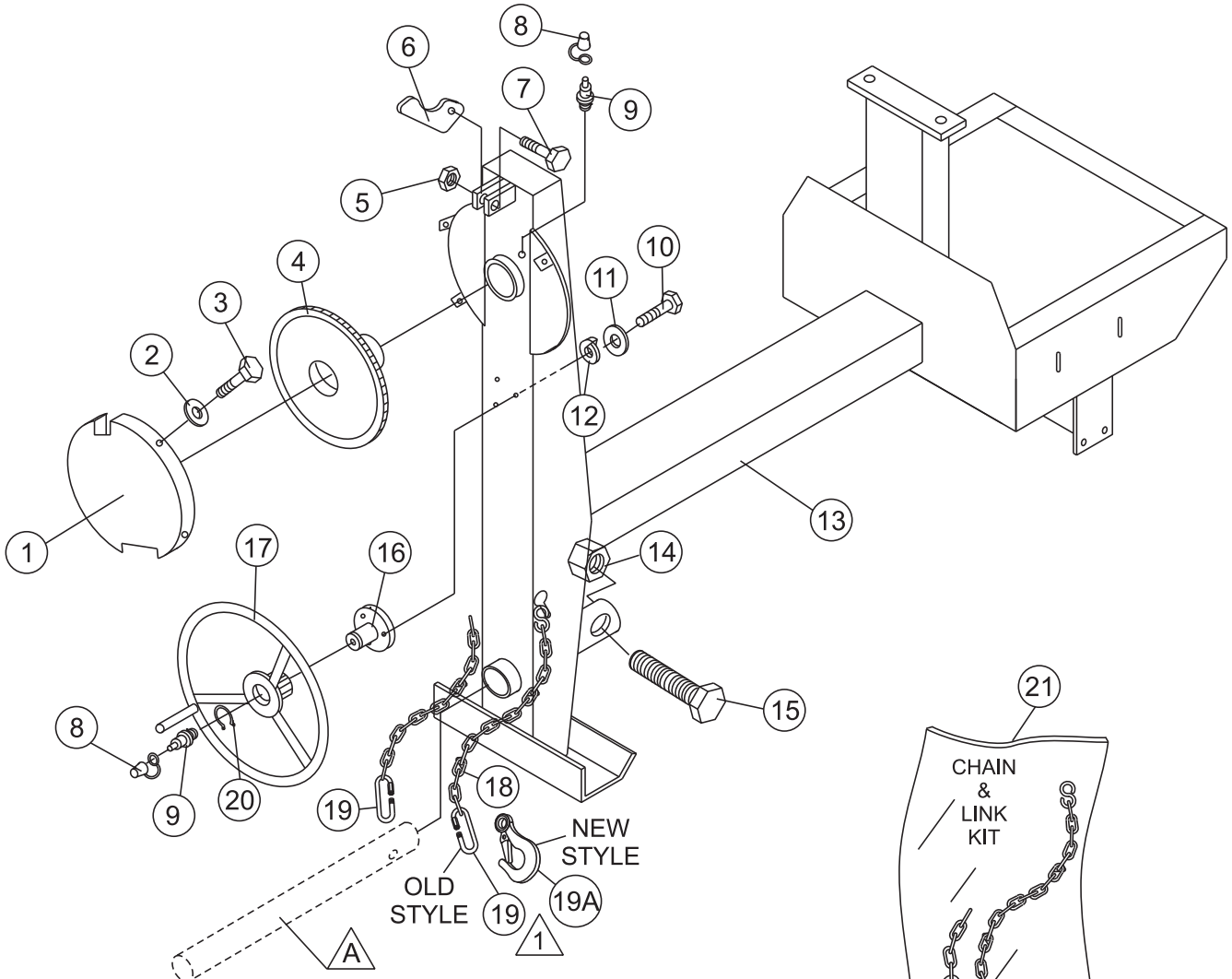

A OPTIONAL TOW BARS

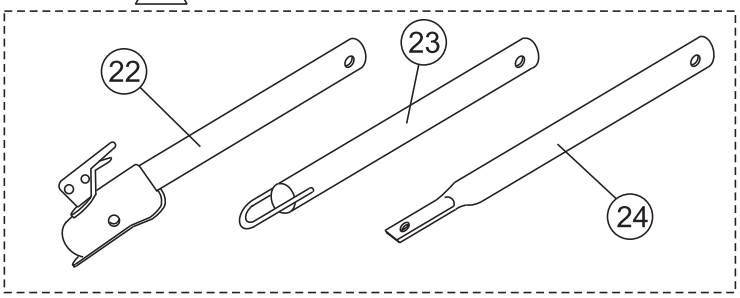

1 Quantity of item 19, Connector Link, changed from 2 to 1 in January 2006. Item 19A, Clevis Safety Hook, replaces discontinued Connector Link.

MAIN FRAME ASSY.

NO	PART NO	PART NAME	QTY.	REMARK
1	514245	GUARD, GEAR WHEEL	1	
2	492621	WASHER, LOCK 1/4"	4	
3	492278	ROUND HEAD BOLT 1/4" NC 3/8 G2"	4	
4	514692	DUMP GEAR	1	
5	492584	NUT, LOCK 1/2" NC	1	
6	490895	DUMP LATCH	1	
7	492395	BOLT 1/2" NC X 1-3/4" G5	1	
8	EM916001	GREASE FITTING 1/8" NPT	2	
9	491008	GREASE CAP	2	
10	EM963055	BOLT 3/8" NC X 3/4" G5	3	
11	3109092	WASHER, FLAT 3/8"	3	
12	0166 A	WASHER, LOCK 3/8"	3	
13	514693	FRAME	1	
14	10176	LOCK NUT 1/2 NC	1	
15	EM124	BOLT 1/2"-13 X 4 G5	1	
16	514723	HANDWHEEL SHAFT	1	
17	514002	HANDWHEEL	1	
18*		SAFETY CHAIN	1	
19*	01004	CONNECTOR LINK	2	BEFORE JANUARY 2006
19*	01004	CONNECTOR LINK	1	AFTER JANUARY 2006
19A	516580	CLEVIS SAFETY HOOK, 1/4"	1	AFTER JANUARY 2006
20	490961	SNAP RING	1	
21	13363KIT	CHAIN AND LINK KIT	1	INCLUDES ITEMS W/*
22	HBC-1	BALL HITCH 2-INCH	1	CONTACT UNIT SALES
23	HLC-1	LOOP HITCH	1	CONTACT UNIT SALES
24	HPC-1	PIN HITCH 1-INCH	1	CONTACT UNIT SALES

AXLE ASSY.

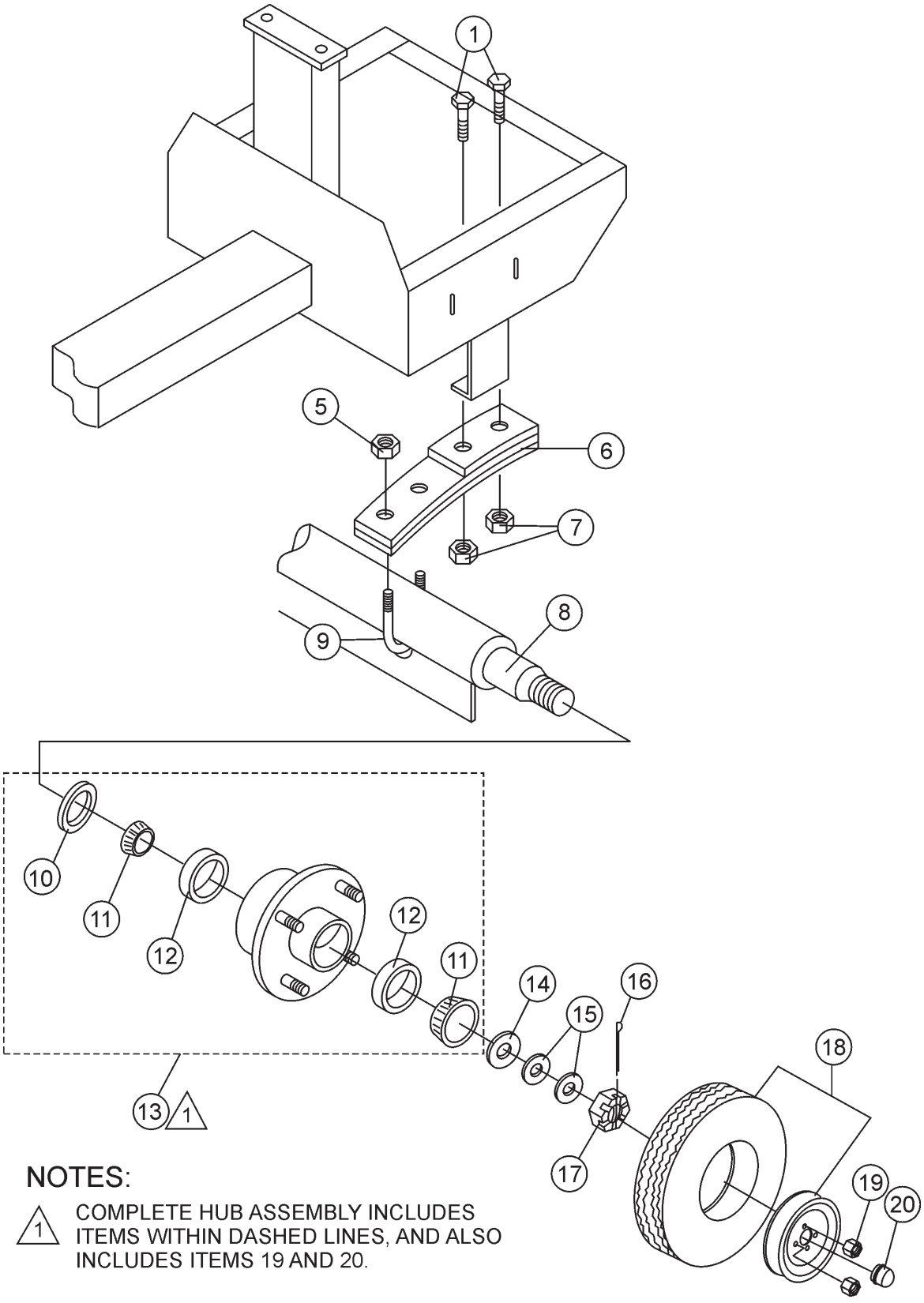

NOTES:

1 COMPLETE HUB ASSEMBLY INCLUDES ITEMS WITHIN DASHED LINES, AND ALSO INCLUDES ITEMS 19 AND 20.

AXLE ASSY.

NO	PART NO	PART NAME	QTY.	REMARK
1	492397	BOLT 1/2" NC 2-1/2" G5	4	
2	EM969023	LOCK NUT 5/8" NC	4	
3	501030	SPRING SUPPORT	2	
4	492406	BOLT 5/8" NC 1-1/2" G5	4	
5	492589	NUT 1/2" NF	4	
6	491928	SPRING LEAF	2	
7	492584	NUT, HEX 1/2"	4	
8	514545	AXLE	1	
9	500617	U-CLAMP	2	
10#	EM914288	OIL SEAL	2	
11#	EM903113	BEARING CONE,	4	
12#	EM903012	BEARING CUP	4	
13	EM941306	HUB ASSY., 4-BOLT	2	INCLUDES ITEMS W/#
14	EM511159	WASHER, FLAT, .087" THICKNESS	2	
15	EM501299	WASHER, FLAT, .135" THICKNESS	AR	
16	491688	COTTER PIN 1/8" X 1-1/2'	2	
17	8164	NUT, SLOTTED HEX JAM 1"-20	2	
18	3005	TIRE AND RIM, CARLISE	2	
19#	8115	LUG NUTS	8	
20#	3469	DUST CAP	2	

CABINET ASSY.

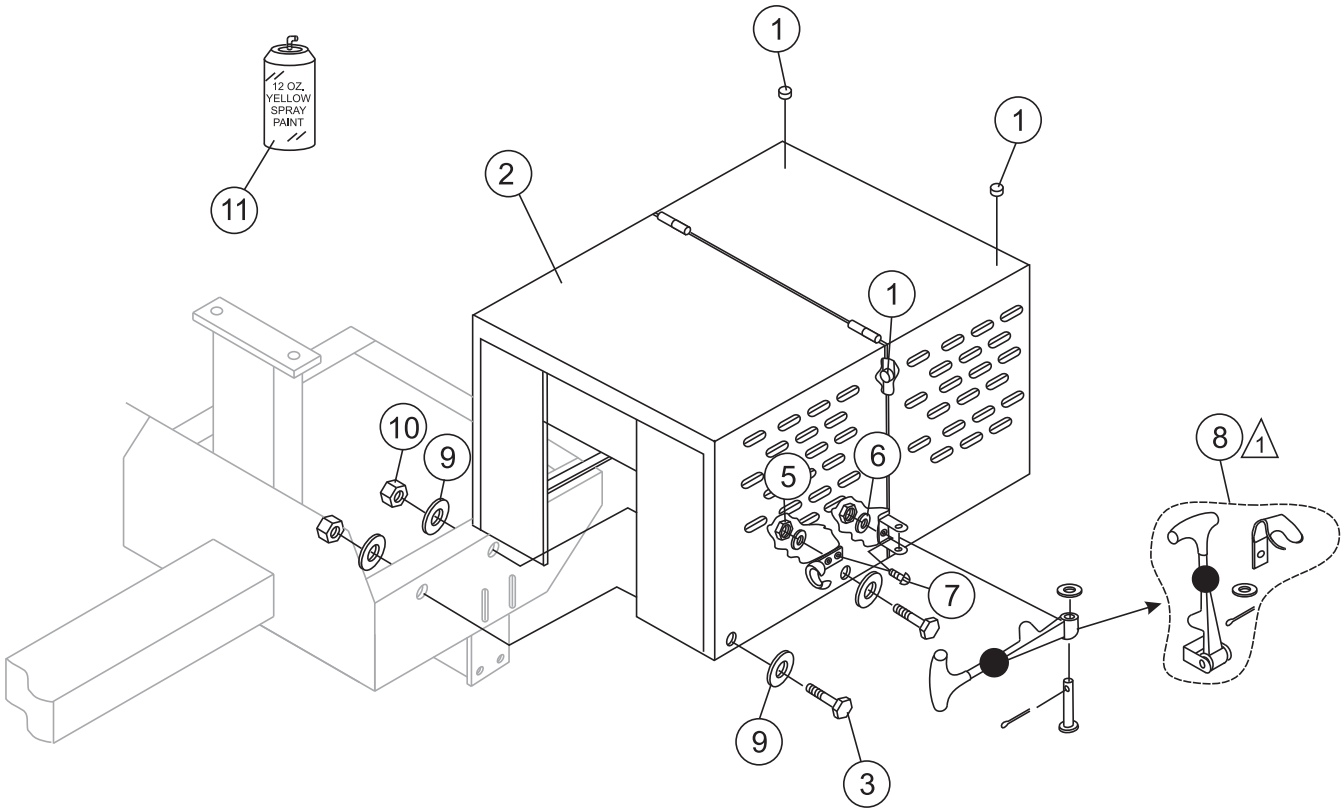

NOTES:

1 COMPLETE LATCH ASSEMBLY INCLUDES ITEMS WITHIN DASHED LINES. ITEMS CANNOT BE PURCHASED SEPARATELY.

CABINET ASSY.

NO	PART NO	PART NAME	QTY.	REMARKS
1	490202	RUBBER PROTECTOR	4	
2	514694	CABINET ENGINE ASSY. W/DECALS	1	INCLUDES ITEM W/*
3	492375	BOLT 3/8" NC X 1" G5	6	
4	EM923023	WASHER, FLAT 5/16"	8	
5	13287	LOCK NUT 8-32	6	REPLACEMENT PART ONLY
6	2203	WASHER, FLAT #10	6	REPLACEMENT PART ONLY
7	1307	RHMS 8-32 X 1/2"	6	REPLACEMENT PART ONLY
8*	491010	LATCH ASSY., COMPLETE	2	
9	492598	WASHER, FLAT 3/8"	12	
10	2105164	NUT 3/8" NC G5	6	
11	EM974007	PAINT, SPRAY CAN 12 OZ. TRAFFIC RED	AR	

MC-64P/S — GAS ENGINE MOUNTING PLATE ASSEMBLY

GAS ENGINE MOUNTING PLATE ASSY.

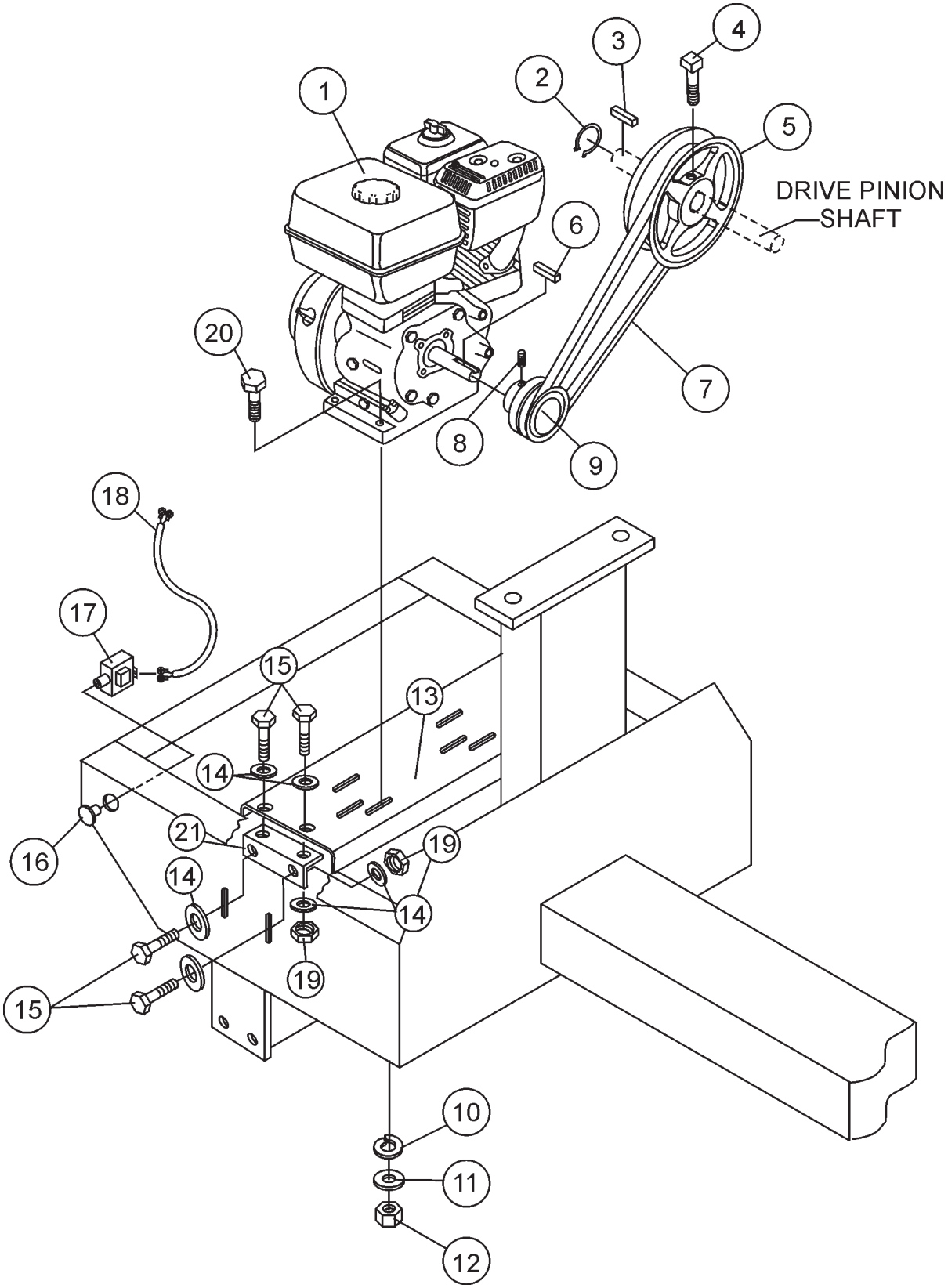

MC-64P/S — GAS ENGINE MOUNTING PLATE ASSEMBLY

GAS ENGINE MOUNTING PLATE ASSY.

NO	PART NO	PART NAME	QTY.	REMARKS
1	GX160K1QX2	ENGINE, HONDA 5.5 HP	1	
1	GX240K1QA2	ENGINE, HONDA 8.0 HP	1	
2	490956	SNAP RING	1	
3	500275	SQUARE KEY 1/4 X 40 MM	1	
4	492468	SET SCREW 5/16" NC X 3/4"	1	
5	514060	UPPER PULLEY	1	
6	501019	SQUARE KEY 3/16" X 45 MM 5.5 HP	1	
6	90745ZE2600	SQUARE KEY 6.3 X 6.3 X 43 MM 8.0 HP	1	
7	512265	V-BELT B-59 5.5 HP	1	
7	493399	V-BELT B-55 8.0 HP	1	
8	492468	ALLEN SCREW 5/16" NC X 3/8"	1	
9	508312	DRIVE PULLEY 5.5 HP	1	
9	504075	DRIVE PULLEY 8.0 HP	1	
10	EM923343	WASHER, LOCK 5/16"	4	
11	EM923023	WASHER, FLAT 5/16"	4	
12	2105164	NUT, HEX 5/16 X18 NC G5	4	
13	514810	BASE PLATE, ENGINE	1	
14	492600	WASHER, FLAT 1/2"	8	
15	EM963692	BOLT, HEX 1/2" NC 1-1/2" G5	4	
16	29174-001	BUTTON, STOP	1	
17	29173-001	SWITCH, STOP	1	
18	510573C	ENGINE CABLE HARNESS	1	
19	492584	LOCKNUT 1/2"	4	
20	492367	BOLT 5/16" X 1-3/4" G5	4	
21	514656	SUPPORT BRACKET	1	

MC-64P/S — ELECTRIC MOTOR MOUNTING PLATE ASSEMBLY

ELECTRIC MOTOR MOUNTING PLATE ASSY.

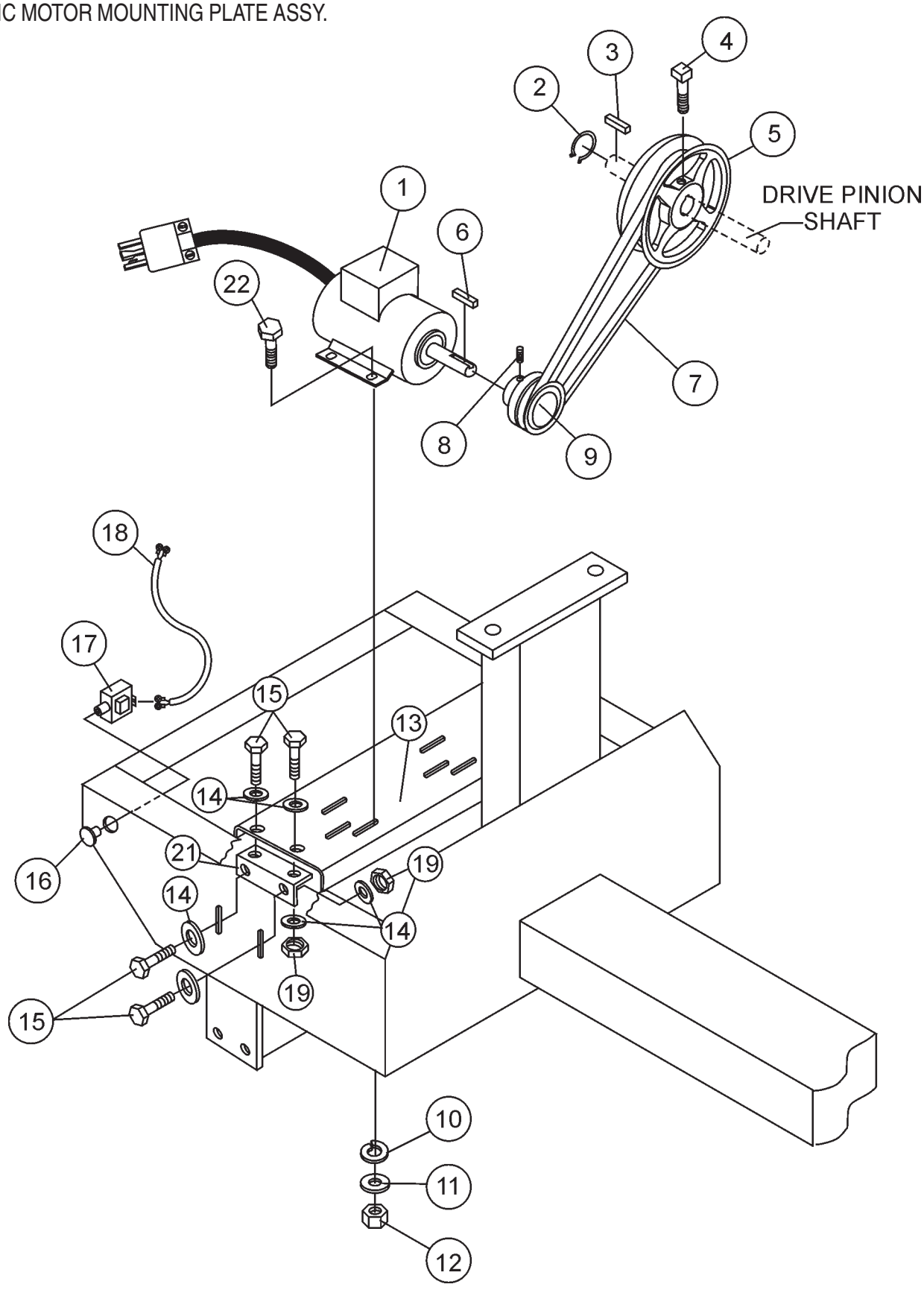

MC-64P/S — ELECTRIC MOTOR MOUNTING PLATE ASSEMBLY

ELECTRIC MOTOR MOUNTING PLATE ASSY.

NO	PART NO	PART NAME	QTY.	REMARKS
1	P145K17DB45A	MOTOR, ELECTRIC 1.5 HP	1	
2	490960	SNAP RING	1	
3	500275	SQUARE KEY 1/4" X 40 MM	1	
4	492476	SET SCREW 5/16" NC X 3/4"	1	
5	514060	UPPER PULLEY	1	
6	500169	SQUARE KEY 3/16" X 50 MM	1	
7	512265	V-BELT B-59	1	
8	492468	ALLEN SCREW 5/16" NC X 1/2"	1	
9	514923	DRIVE PULLEY	1	
10	EM923343	WASHER, LOCK 5/16"	4	
11	EM923023	WASHER, FLAT 5/16"	4	
12	2105164	NUT, HEX 5/16 X18 NC G5	4	
13	514810	BASE PLATE, ENGINE	1	
14	492600	WASHER, FLAT 1/2"	8	
15	EM963692	BOLT, HEX 1/2" NC 1-1/2" G5	4	
16	29174-001	BUTTON, STOP	1	
17	29173-001	SWITCH, STOP	1	
18	510573C	ENGINE CABLE HARNESS	1	
19	492584	LOCKNUT 1/2"	4	
20	492367	BOLT 5/16" X 1-3/4" G5	4	
21	514656	SUPPORT BRACKET	1	
22	0202	5/16" X 1" G5	4	

AIR CLEANER ASSY.

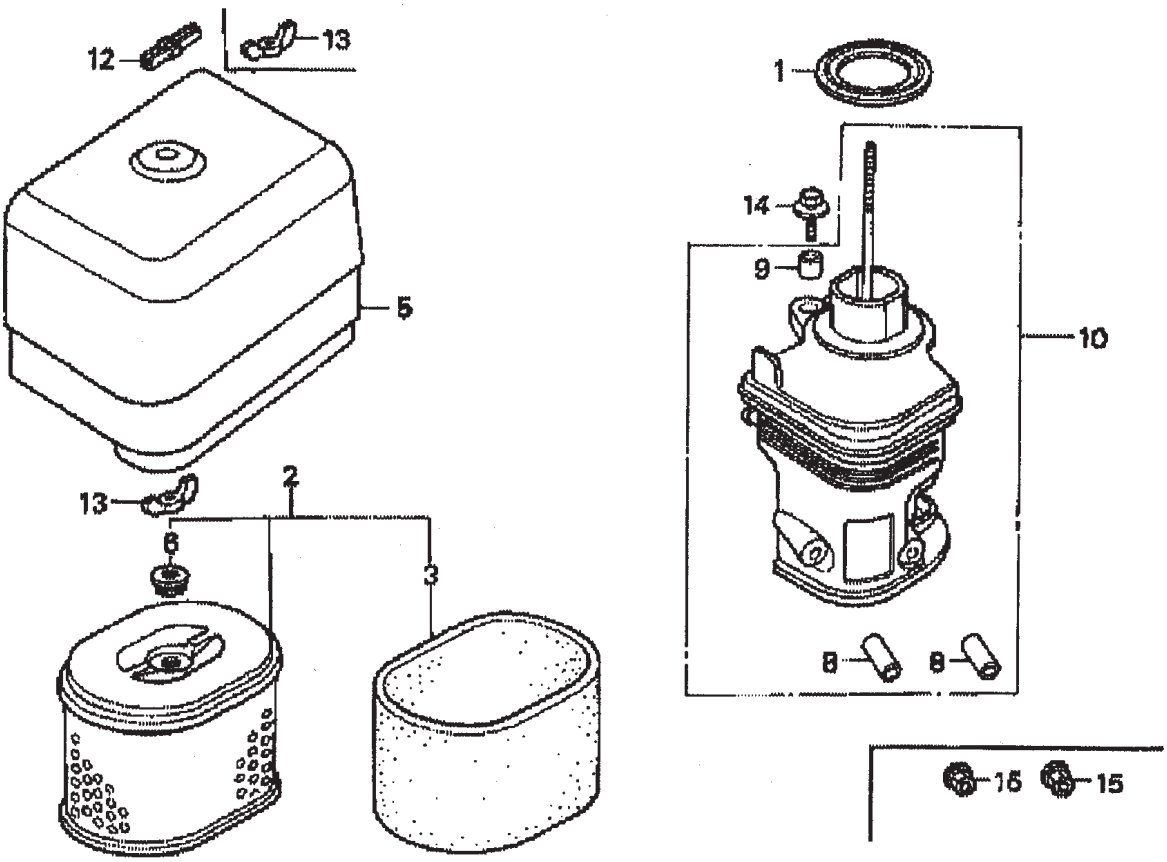

HONDA GX240K1QA2 ENGINE — AIR CLEANER ASSY.

AIR CLEANER ASSY.

NO.	PART NO.	PART NAME	QTY.	REMARKS
1	16271ZE2000	GASKET, ELBOW	1	INCLUDES ITEM W/*
2	17210ZE2515	ELEMENT, AIR CLEANER, DUAL	1	
3 *	17218ZE2505	FILTER, OUTER	1	
5	17231ZH9820	COVER, AIR CLEANER	1	
6	17232891000	GROMMET, AIR CLEANER	1	
8 #	17238ZE2310	COLLAR, AIR CLEANER	2	
9 #	17239ZE1000	COLLAR B, AIR CLEANER	1	
10	17410ZE2020	ELBOW COMP., AIR CLEANER	1	INCLUDES ITEM W/#
12	0037806000	WINGNUT 6MM	1	
13	90325044000	WINGNUT, TOOL BOX SETTING	2	
14	90009ZE2003	BOLT- WASHER 6 X 22	1	
15	9405006000	NUT, FLANGE 6MM	2	

CAMSHAFT ASSY.

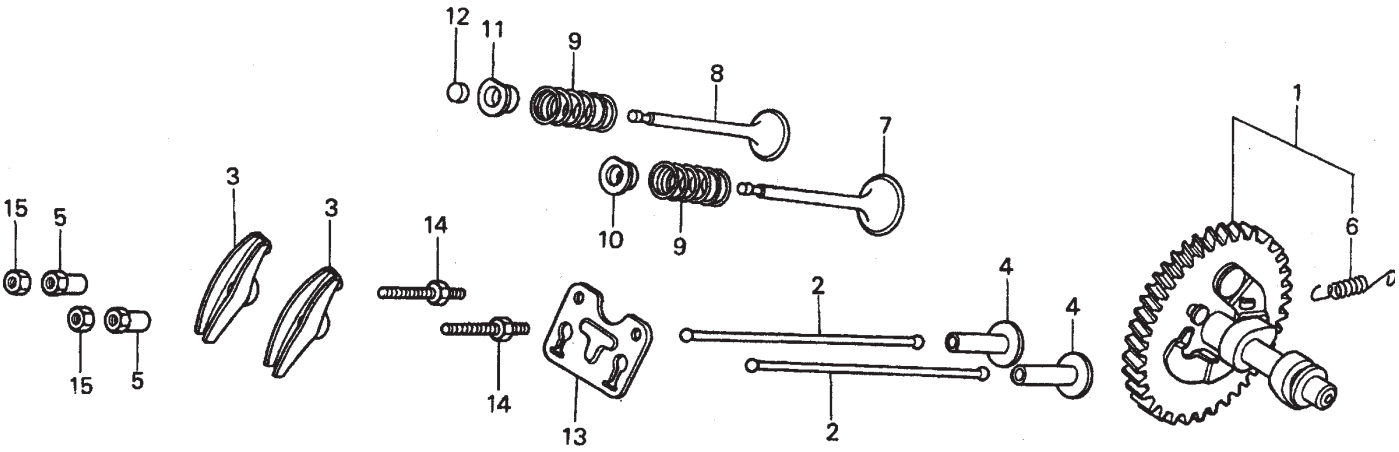

HONDA GX240K1QA2 ENGINE — CAMSHAFT ASSY.

CAMSHAFT ASSY.

NO.	PART NO.	PART NAME	QTY.	REMARKS
1	14100ZE2W01	CAMSHAFT ASSY.	1	INCLUDES ITEM W/*
1	14100ZE2306	CAMSHAFT	1	
2	14410ZE2013	ROD PUSH	2	
3	14431ZE2010	ARM VALVE ROCKER	2	
4	14441ZE2000	LIFTER VALVE	2	
5	14451ZE1013	PIVOT ROCKER ARM	2	
6*	14568ZE1000	SPRING, WEIGHT RETURN	1	
7	14711ZE2000	VALVE, IN.	1	
8	14721ZE2000	VALVE, EX.	1	
9	14751ZE2003	SPRING, VALVE	2	
10	14771ZE2000	RETAINER, IN. VALVE SPRING	1	
11	14773ZE2000	RETAINER, EX. VALVE SPRING	1	
12	14781ZE2000	ROTATOR, VALVE	1	
13	14791ZE2010	PLATE, PUSH ROD GUIDE	1	
14	90012ZE0010	BOLT, PIVOT 8MM	2	
15	90206ZE1000	NUT, PIVOT ADJ.	2	

CARBURETOR ASSY.

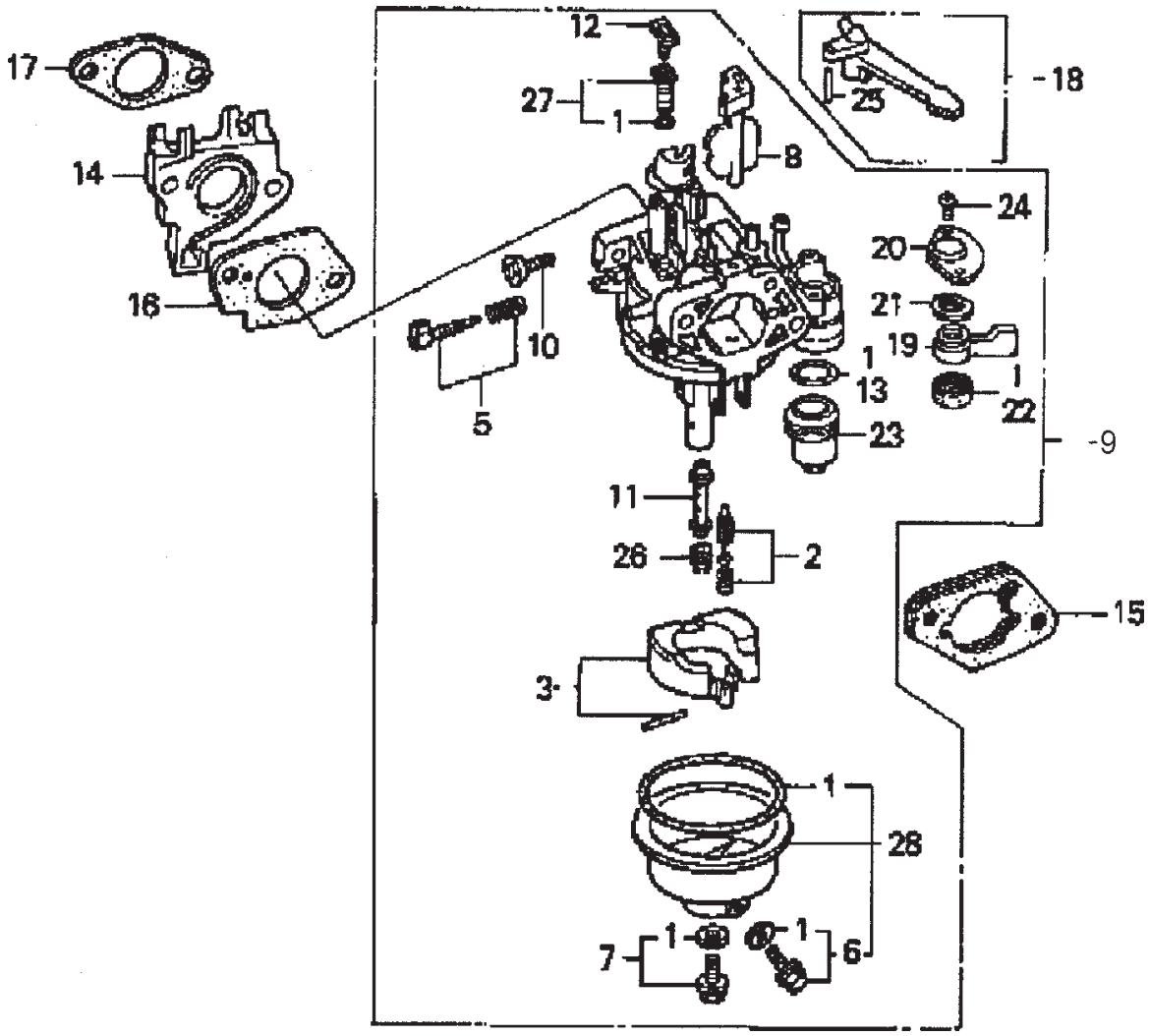

HONDA GX240K1QA2 ENGINE — CARBURETOR ASSY.

CARBURETOR ASSY.

NO.	PART NO.	PART NAME	QTY.	REMARKS
1*+	16010ZE2812	GASKET SET	1	
2*	16011ZA0931	VALVE SET, FLOAT	1	
3*	16013ZA0931	FLOAT SET	1	
5*	16016ZHW01	SCREW SET	1	
6*+	16024ZE1811	SCREW SET, DRAIN	1	
7*+	16028ZE0005	SCREW SET B	1	
8*	16028ZE2005	CHOKE SET	1	
9*	16100ZE2W71	CARBURETOR ASSY.	1	INCLUDES ITEMS W/*
10*	16124ZE0005	SCREW, THROTTLE STOP	1	
11*	16166ZE2W70	NOZZLE, MAIN	1	
12*	16172ZE3W10	COLLAR, SET	1	
13*	16075GHBB00	O-RING	1	
14	16211ZE2000	INSULATOR, CARB.	1	
15	16220ZA0702	SPACER COMP., CARB.	1	
16	16221ZA0800	GASKET, CARBURETOR	1	
17	16223ZA0800	GASKET, INSULATOR	1	
18	16610ZE1000	LEVER COMP., CHOKE, STD.	1	
19*	16953ZE1812	LEVER, VALVE	1	
20*	16954ZE1811	PLATE, LEVER SETTING	1	
21*	16956ZE1811	SPRING, VALVE LEVER	1	
22*	16957ZE1812	GASKET, VALVE	1	
23*	16967ZE0811	CUP, FUEL STRAINER	1	
24*	93500030060H	SCREW, PAN 3 X 6	2	
25	9430520122	PIN, SPRING 2 X 12	1	
26*	99101ZH70820	JET, MAIN #82, OPTIONAL	1	
26*	99101ZH70850	JET, MAIN #85, OPTIONAL	1	
26*	99101ZH80880	JET, MAIN #88	1	
27*	99204ZE20400	JET SET, PILOT #40	1	
28*	16015ZE8005	CHAMBER SET, FLOAT	1	INCLUDES ITEMS W/+

CONTROL ASSY.

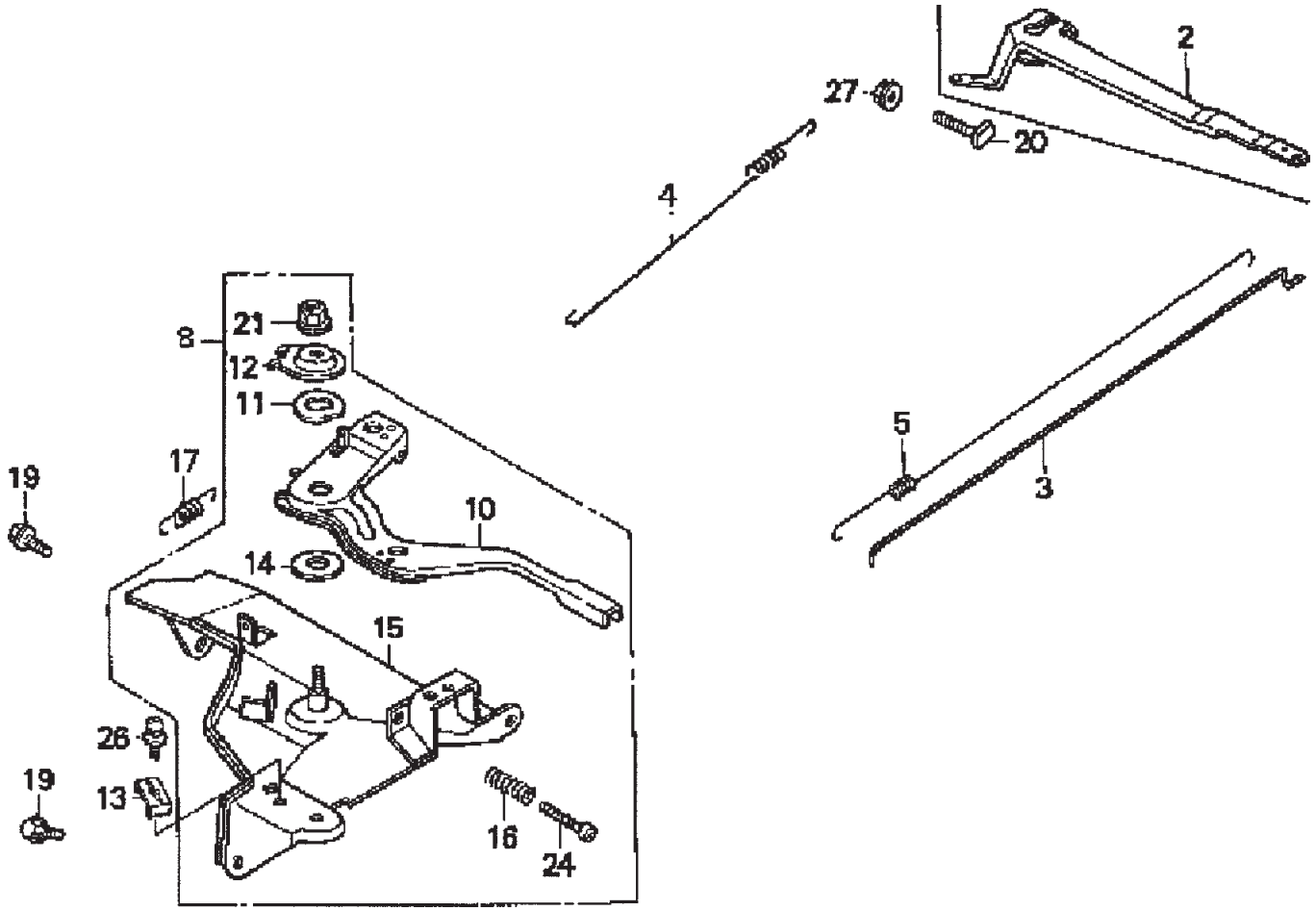

HONDA GX240K1QA2 ENGINE — CONTROL ASSY.

CONTROL ASSY.

NO.	PART NO.	PART NAME	QTY.	REMARKS
2	16551ZE2000	ARM, GOVERNOR	1	
3	16555ZE2000	ROD, GOVERNOR	1	
4	16561ZE2000	SPRING, GOVERNOR	1	
5	16571ZE2000	SPRING, THROTTLE RETURN	1	
8	16570ZE2W20	CONTROL ASSEMBLY	1	..... INCLUDES ITEMS W/*
10*	16571ZE2W00	LEVER, CONTROL	1	
11*	16574ZE1000	SPRING, LEVER	1	
12*	16575ZE2W00	WASHER, CONTROL LEVER	1	
13	16576891000	HOLDER, CABLE		
14*	16578ZE1000	SPACER, CONTROL LEVER	1	
15*	16581ZE2W00	BASE, CONTROL	1	
16*	16584883300	SPRING, CONTROL ADJUSTING	1	
17	16592883310	SPRING, CABLE RETURN	1	
19	90013883000	BOLT, FLANGE (6 X 12) (CT200)	2	
20	90015ZE5010	BOLT, GOVERNOR ARM	1	
21*	90114SA0000	NUT, SELF- LOCK (6MM)	1	
24*	93500050280A	SCREW, PAN (5 X 28)	1	
26	93500050160A	SCREW, PAN (5 X 16)	1	
27	9405006000	NUT, FLANGE	1	

CRANKCASE COVER ASSY.

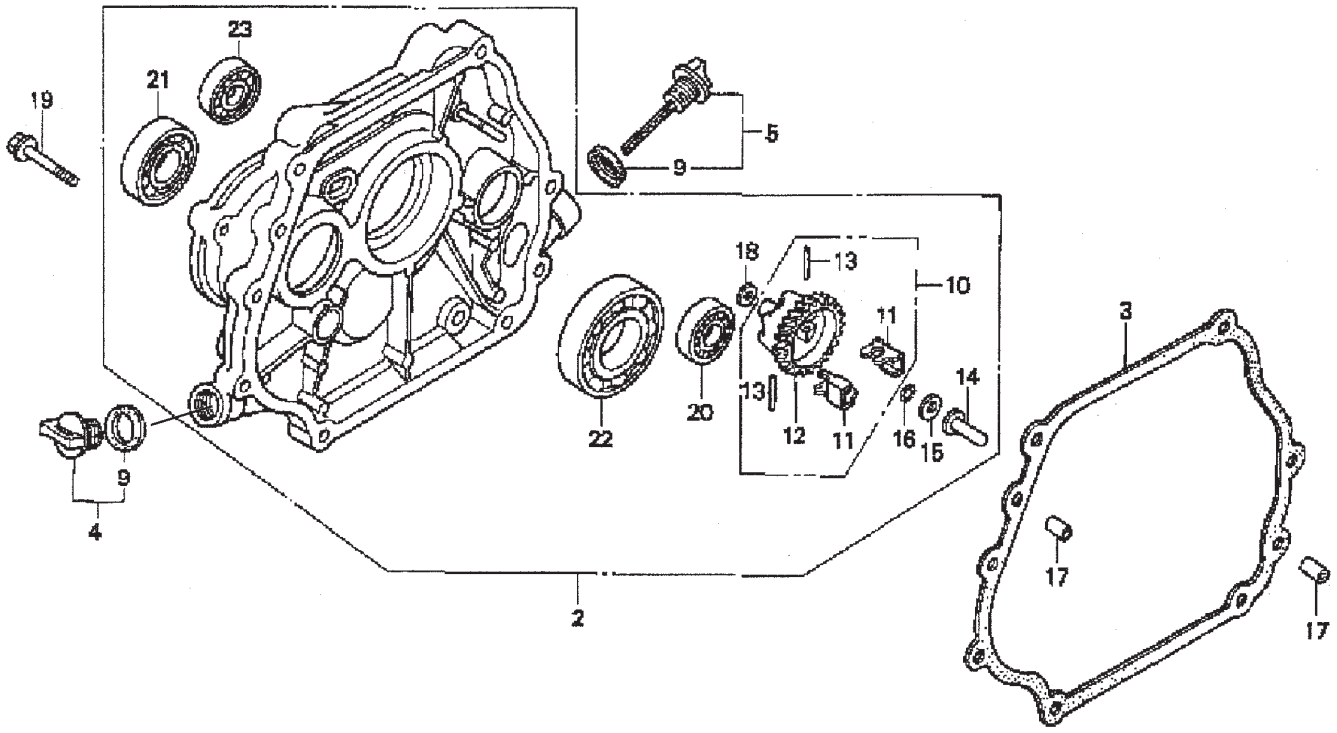

HONDA GX240K1QA2 ENGINE — CRANKCASE COVER ASSY.

CRANKCASE COVER ASSY.

NO.	PART NO.	PART NAME	QTY.	REMARKS
2	11400ZE2601	COVER ASSY., CRANKCASE (Q- TYPE) (BALANCER)	1	INCLUDES ITEMS W/*
3	11381ZE2801	GASKET, CASE COVER	1	
4	15600ZG4003	CAP ASSY., OIL FILLER	1	INCLUDES ITEMS W/#
5	15600735003	CAP ASSY., OIL FILLER	1	INCLUDES ITEMS W/#
9#	15625ZE1003	GASKET, OIL FILLER CAP	1	
10	16510ZE2811	GOVERNOR ASSEMBLY (BALANCER)	1	INCLUDES ITEMS W/+
11*+	16511ZE2000	WEIGHT, GOVERNOR	2	
12*+	16512ZE2811	HOLDER, GOVERNOR WEIGHT	1	
13*+	16513ZE2000	PIN, GOVERNOR WEIGHT	2	
14*	16531ZE2000	SLIDER, GOVERNOR	1	
15*	90473147000	WASHER (6 X 16)	1	
16*	90602ZE1000	CLIP, GOVERNOR HOLDER	1	
17	90701HC4000	PIN, DOWEL (8 X 12)	2	
18*	58176	WASHER, PLAIN (6MM)	1	
19	957010803500	BOLT, FLANGE (8 X 35)	7	
20*	961006202000	BEARING, RADIAL BALL (6202)	1	
21*	961006204000	BEARING, RADIAL BALL (6204)	1	
22*	961006206000	BEARING, RADIAL BALL (6206)	1	
23*	961006302000	BEARING, RADIAL BALL (6302)	1	

CRANKSHAFT ASSY.

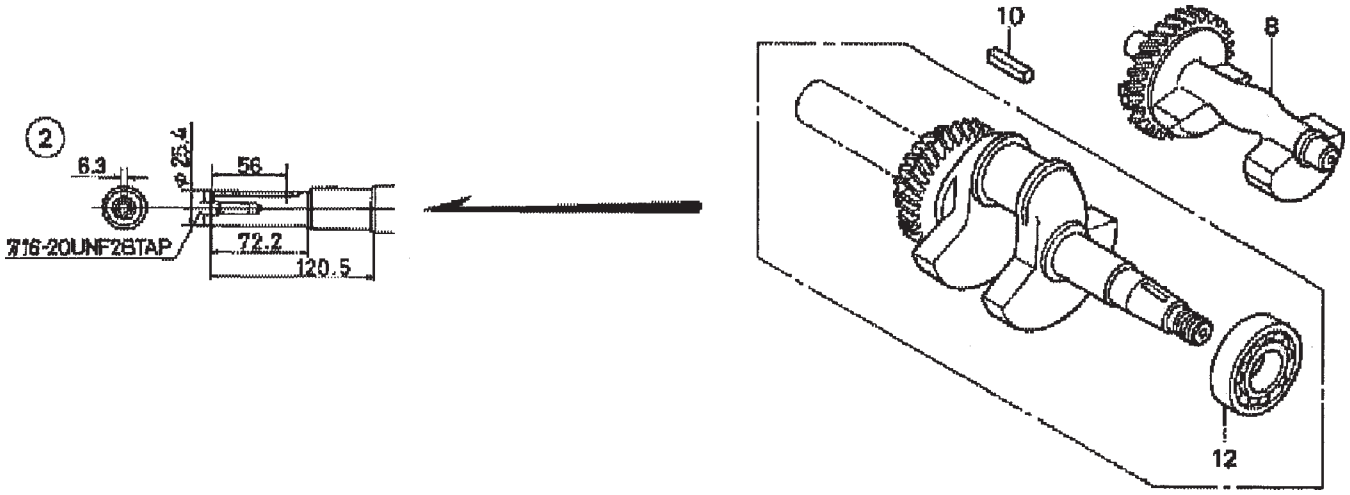

HONDA GX240K1QA2 ENGINE — CRANKSHAFT ASSY.

CRANKSHAFT ASSY.

NO.	PART NO.	PART NAME	QTY.	REMARKS
2	13320ZE2601	CRANKSHAFT (Q- TYPE)	1	INCLUDES ITEM W/*
8	13351ZE2010	WEIGHT BALANCER	1	
10	90745ZE2600	KEY 6.3 X 6.3 X 43 MM	1	
12*	961006206000	BEARING, RADIAL BALL (6206)	1	

CYLINDER BARREL ASSY.

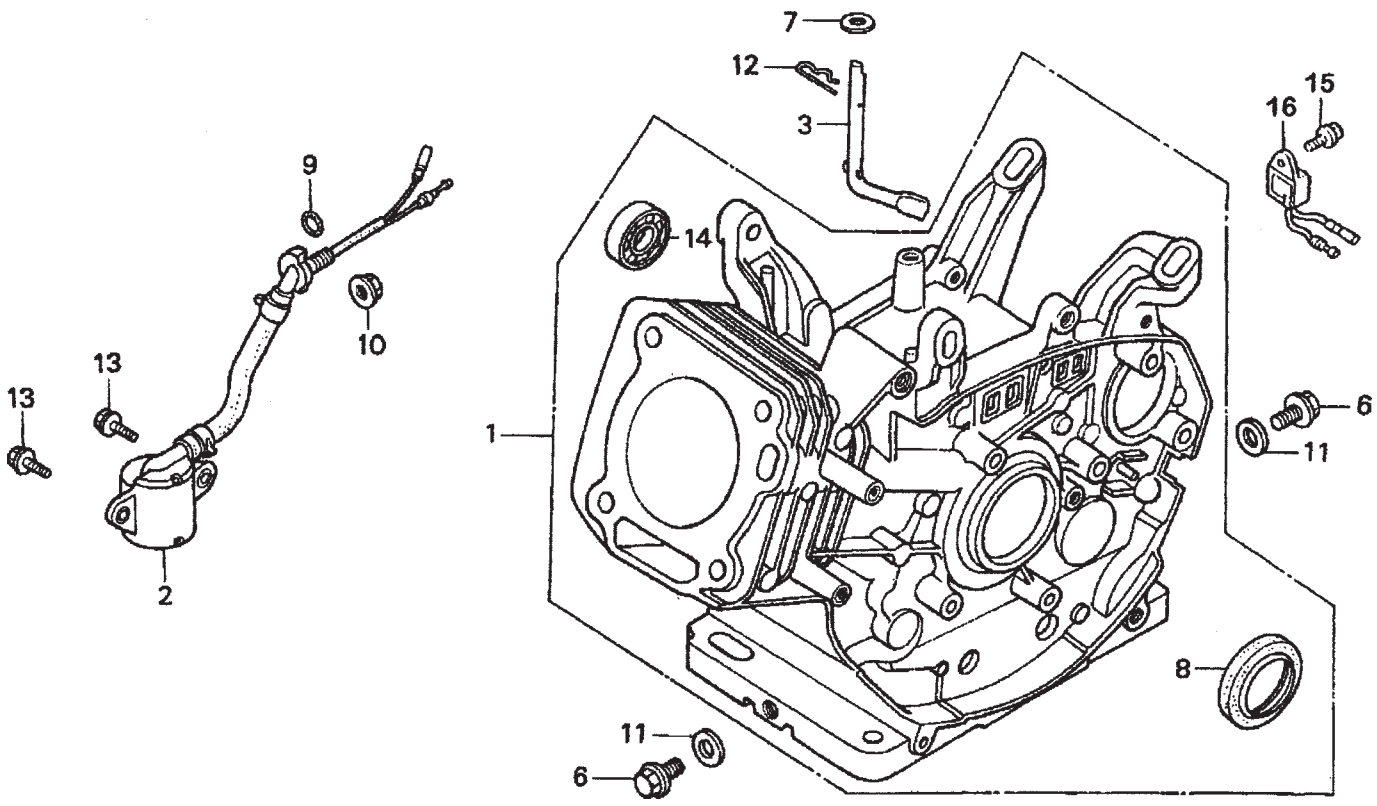

HONDA GX240K1QA2 ENGINE — CYLINDER BARREL ASSY.

CYLINDER BARREL ASSY.

NO.	PART NO.	PART NAME	QTY.	REMARKS
1	12000ZE2834	CYLINDER ASSY., BALANCER + OIL ALERT	1	INCLUDES ITEMS W/*
2	15510ZE2043	SWITCH ASSY., OIL LEVEL	1	
3	16541ZE2010	SHAFT, GOVERNOR ARM	1	
6	90131896650	BOLT, DRAIN PLUG	2	
7	90446KE1000	WASHER 8.2 X17X0.8	1	
8*	91201890003	OIL SEAL 30X46X8	1	
9	91353671003	O-RING 14MM ARAI	1	
10	9405010000	NUT FLANGE 10MM	1	
11	9410912000	WASHER, DRAIN PLUG 12MM	2	
12	031112230	PIN, LOCK 10MM	1	
13	957010601200	BOLT, FLANGE 6X12	2	
14*	961006202000	BEARING, RADIAL BALL 6202	1	
15	90013883000	BOLT, FLANGE 6X12 CT200	1	
16	34150ZH7003	ALERT UNIT, OIL	1	

CYLINDER HEAD ASSY.

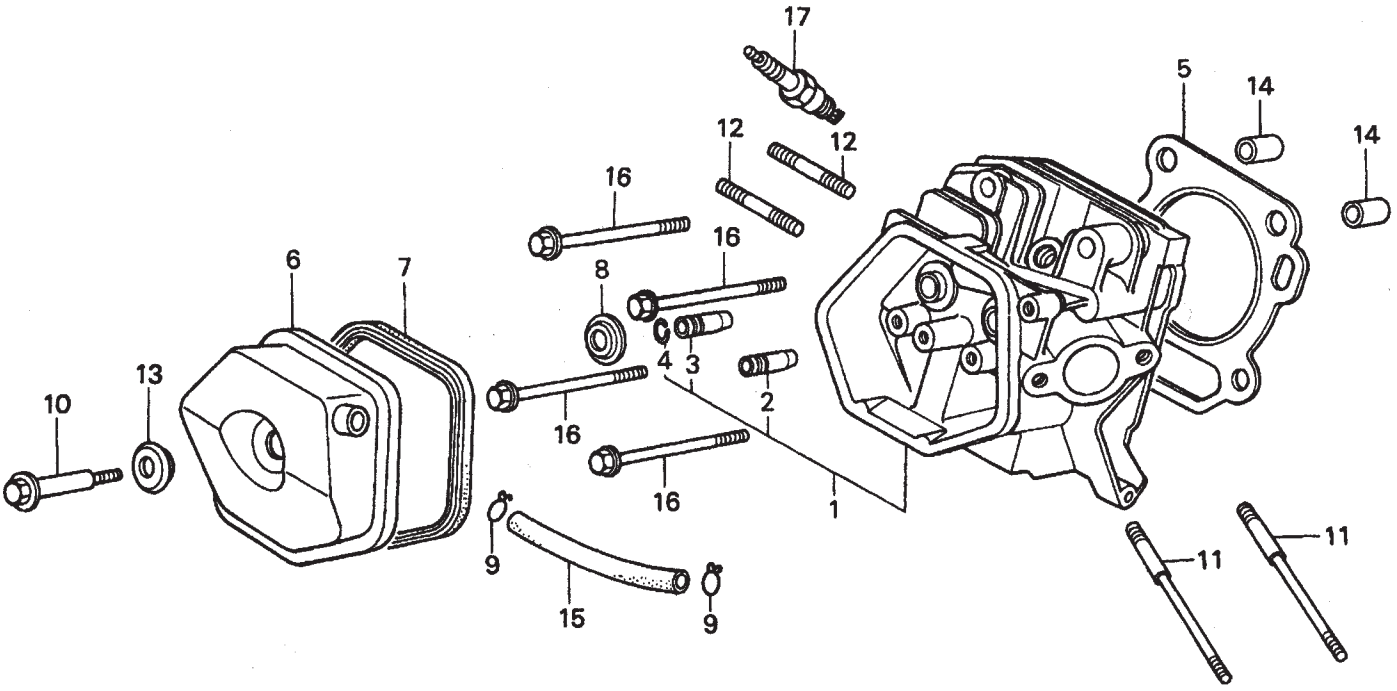

HONDA GX240K1QA2 ENGINE — CYLINDER HEAD ASSY.

CYLINDER HEAD ASSY.

NO.	PART NO.	PART NAME	QTY.	REMARKS
1	12200ZH9000	CYLINDER HEAD COMP.	1	INCLUDES ITEMS W/*
2*	12204ZE2306	GUIDE, VALVE, OS, OPTIONAL	1	
3*	12205ZE2305	GUIDE, EX. VALVE, OS, OPTIONAL	1	
4*	12216ZE2300	CLIP, VALVE GUIDE	1	
5	12251ZE2800	GASKET, CYLINDER HEAD	1	
6	12310ZE2020	COVER COMP., HEAD	1	
7	12391ZE2020	GASKET, CYLINDER HEAD COVER	1	
8	14775ZE2010	SEAT, VALVE SPRING	1	
10	90014ZE2000	BOLT, HEAD COVER	1	
11	90042ZE2000	BOLT, STUD 8X123	2	
12	92900080320E	BOLT, STUD 8X47	2	
13	90441ZE2010	WASHER COMP., HEAD COVER	1	
14	9430112200	PIN A, DOWEL 12X20	2	
15	950051100130M	BULK HOSE, VACUUM 11X1000, 11X100	1	
16	957011008000	BOLT, FLANGE 10X80	4	
17	9807956846	SPARK PLUG, BPR6ES, NGK	1	
17	9807956855	SPARK PLUG, W20EPR-U, DENSO	1	

FAN COVER ASSY.

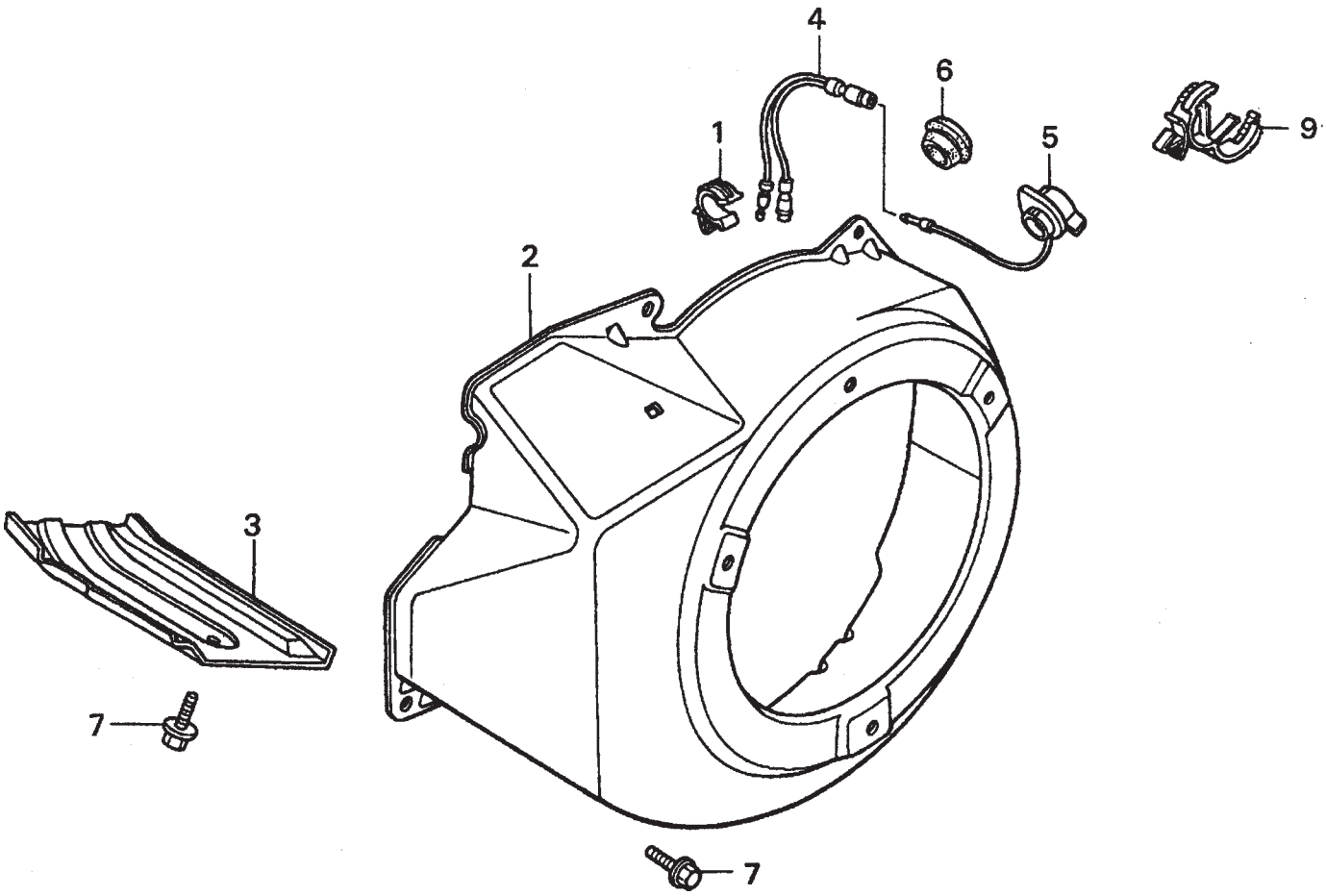

HONDA GX240K1QA2 ENGINE — FAN COVER ASSY.

FAN COVER ASSY.

NO.	PART NO.	PART NAME	QTY.	REMARKS
1	16731ZE2003	CLIP, TUBE	1	
2	19610ZE2010ZC	COVER COMP., FAN *NH1* BLACK	1	
3	19631ZE2D00	SHROUD	1	
4	32197ZH8003	SUB-HARNESS	1	
5	36100ZE1015	SWITCH ASSY., ENGINE STOP	1	
7	90013883000	BOLT, FLANGE 6X12, CT200	6	
9	90684ZA0601	CLIP, WIRE HARNESS	1	

FLYWHEEL ASSY.

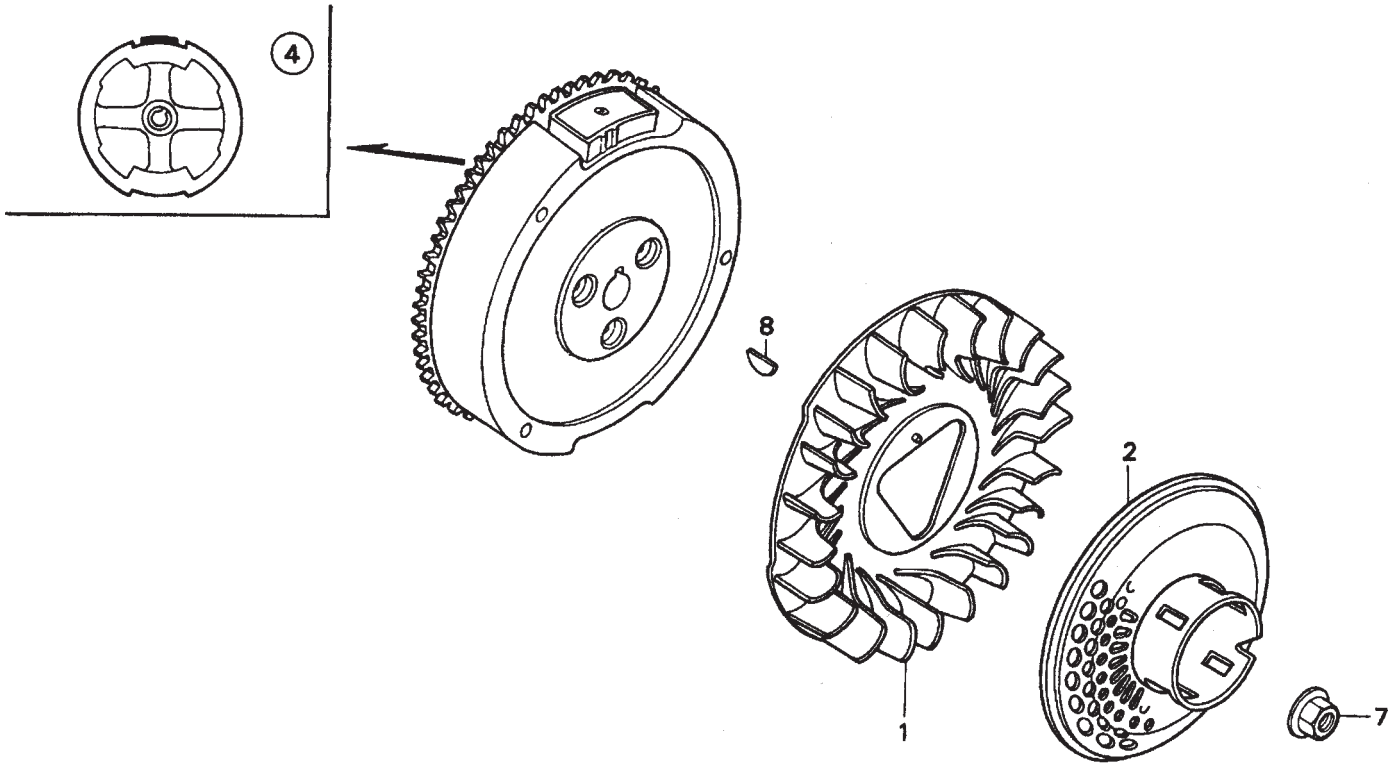

FLYWHEEL ASSY.

NO.	PART NO.	PART NAME	QTY.	REMARKS
1	19511ZE2000	FAN, COOLING	1	
2	28450ZE2W11	PULLEY COMP., STARTER, SCREEN GRID	1	
4	31100ZE2010	FLYWHEEL COMP.	1	
7	90201ZE3V00	NUT, SPECIAL 16MM	1	
8	90741ZE2000	KEY, SPECIAL WOODRUFF 25X18	1	

MUFFLER ASSY.

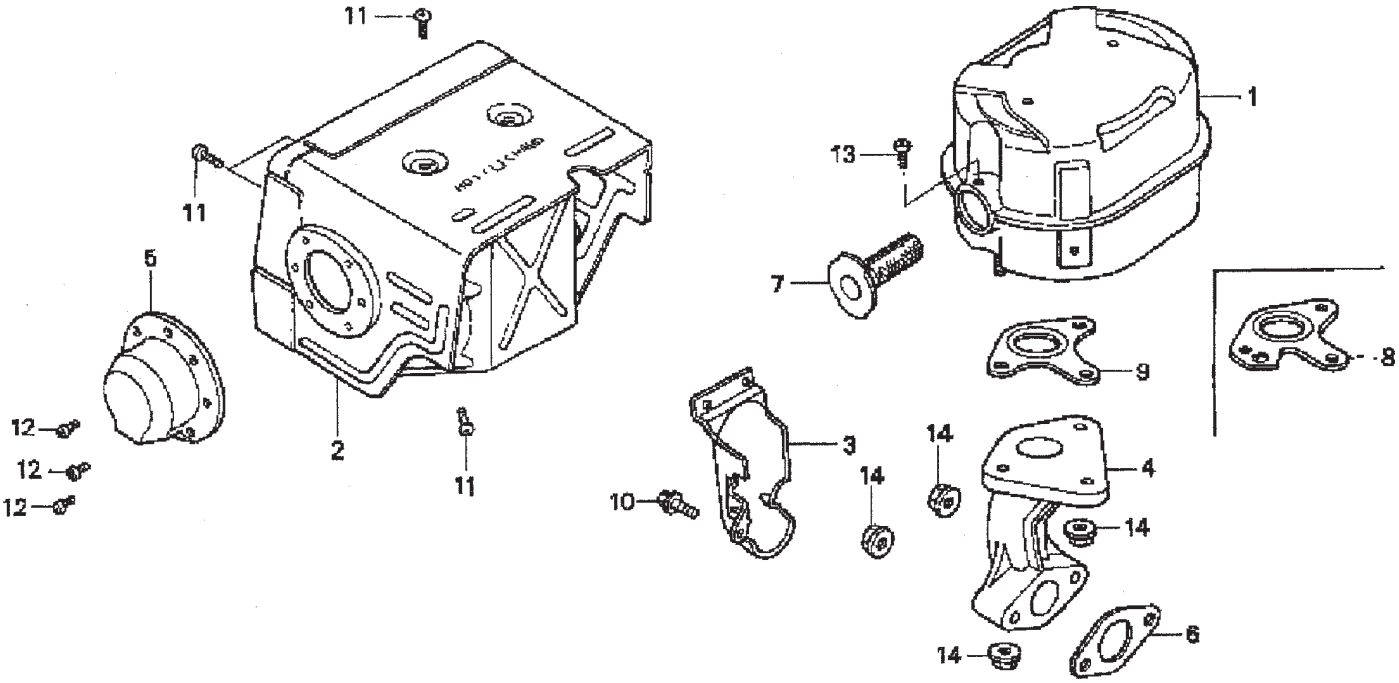

HONDA GX240K1QA2 ENGINE — MUFFLER ASSY.

MUFFLER ASSY.

NO.	PART NO.	PART NAME	QTY.	REMARKS
1	18310ZE2W00	MUFFLER	1	
2	18320ZE2W01	PROTECTOR, MUFFLER	1	
3	18323ZE2W00	PROTECTOR, EX. PIPE	1	
4	18330ZE2W00	PIPE, EX.	1	
5	18331ZE2810	CAP, MUFFLER	1	
6	18333ZK6Y00	GASKET, EX. PIPE	1	
7	18355ZE2010	ARRESTER, SPARK	1	
8	18381ZE2W10	GASKET, MUFFLER (ARRESTER)	1	
9	18381ZE2800	GASKET, MUFFLER	1	
10	90013883000	BOLT, FLANGE (6 X 12) (CT200)	1	
11	90050ZE1000	SCREW, TAPPING (5 X 8)	6	
12	90055ZE1000	SCREW, TAPPING (4 X 6)	3	
13	90050ZE1000	SCREW, TAPPING (5 X 8) (OPTIONAL)	1	
14	9405008000	NUT, FLANGE (8MM)	5	

FUEL TANK ASSY.

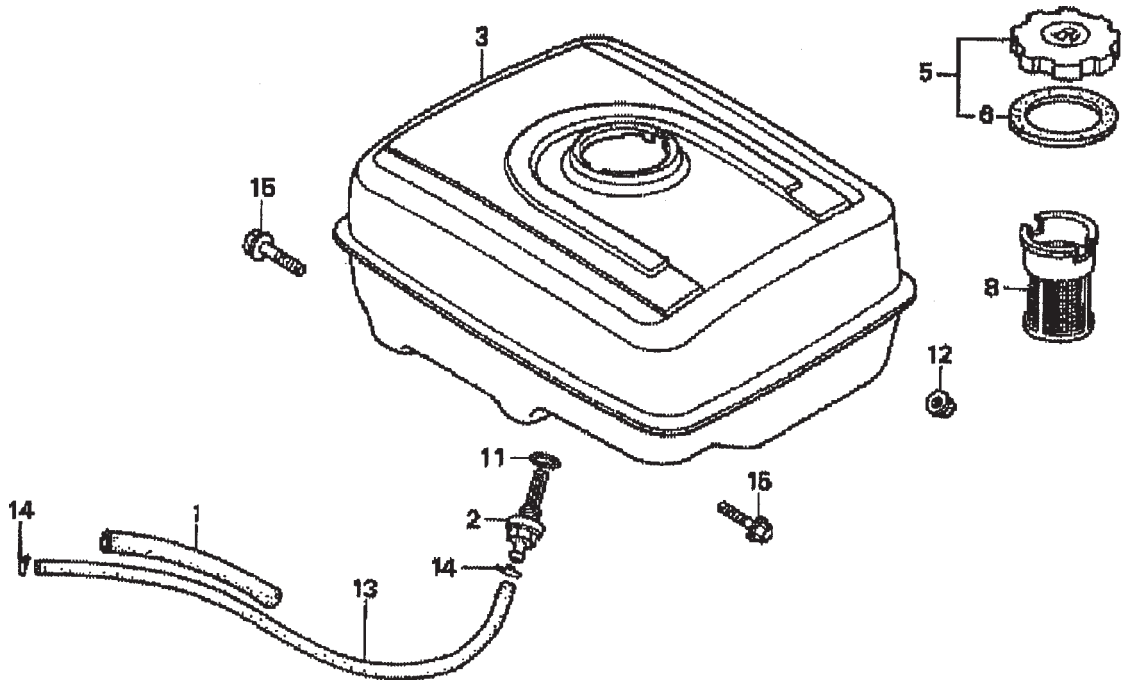

FUEL TANK ASSY.

NO.	PART NO.	PART NAME	QTY.	REMARKS
1	16854ZH8000	RUBBER SUPPORTER 107MM	1	
2	16955ZE1000	JOINT, FUEL TANK	1	
3	17510ZE2010ZD	TANK COMP., FUEL *NH1*, BLACK	1	
5	17620ZH7023	CAP COMP., FUEL FILLER	1	INCLUDES ITEMS W/*
6*	17631ZH7003	GASKET, FUEL FILLER CAP	1	
8	17672ZE2W01	FILTER, FUEL	1	
11	91353671003	O-RING 14MM, ARAI	1	
12	9405008000	NUT, FLANGE 8MM	2	
13	950014500360M	BULK HOSE, FUEL 4.5X3000, 4.5X222	1	
14	9500202080	CLIP, TUBE, B8	2	
15	957010802500	BOLT, FLANGE 8X25	2	

IGNITION COIL ASSY.

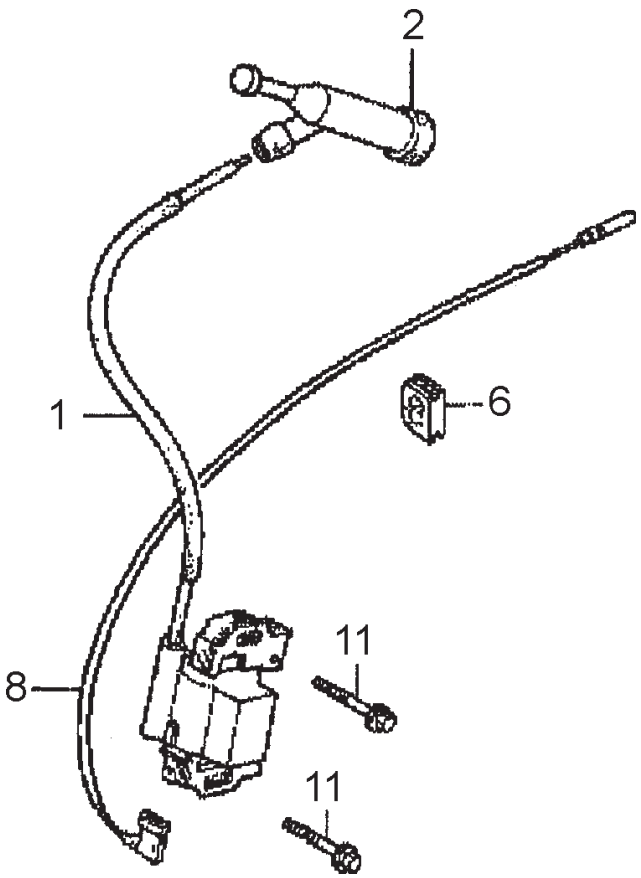

IGNITION COIL ASSY.

NO.	PART NO.	PART NAME	QTY.	REMARKS
1	30500ZF6W02	COIL ASSY., IGNITION	1	
2	30700ZE1013	CAP ASSY., NOISE SUPPRESSOR	1	
6	31512ZE2000	GROMMET, WIRE	1	
8	36101ZE1010	WIRE, STOP SWITCH 370MM	1	
11	90015883000	BOLT, FLANGE 6X28	2	

PISTON ASSY.

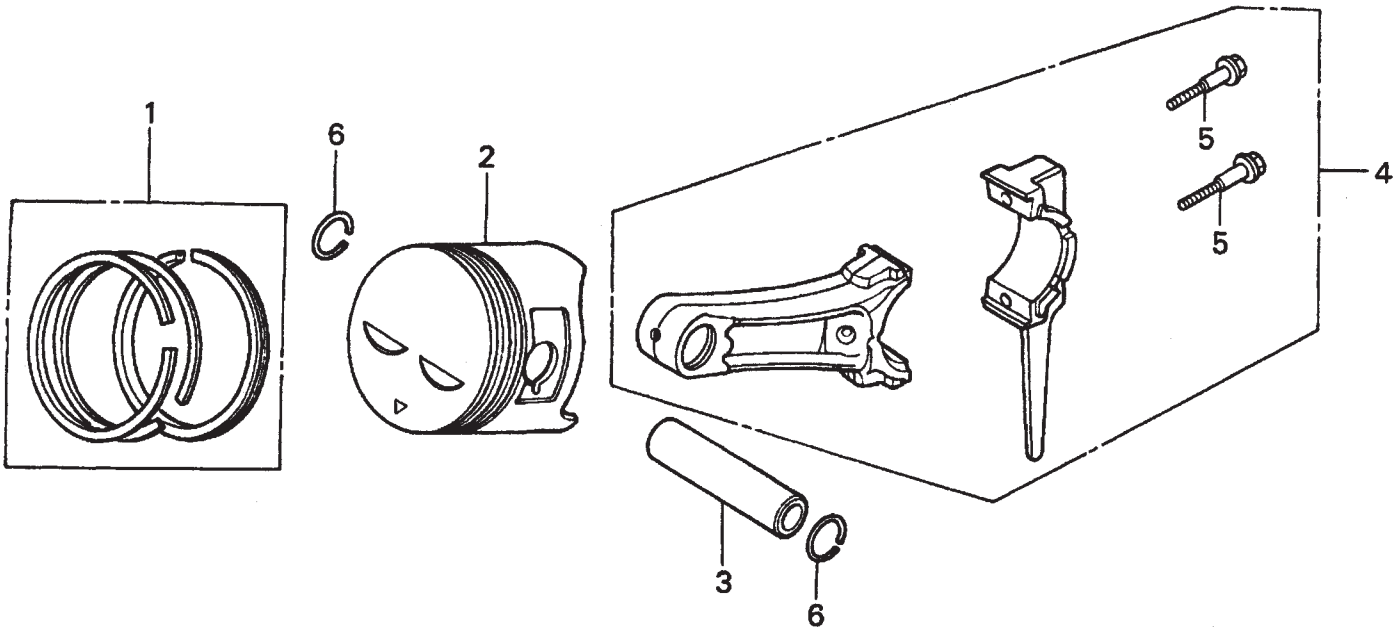

PISTON ASSY.

NO.	PART NO.	PART NAME	QTY.	REMARKS
1	13010ZE2013	RING SET, PISTON, STD.	1	
1	13011ZE2013	RING SET, PISTON, OS 0.25, OPTIONAL	1	
1	13012ZE2013	RING SET, PISTON, OS 0.50, OPTIONAL	1	
1	13013ZE2013	RING SET, PISTON, 0.75, OPTIONAL	1	
2	13101ZE2W00	PISTON, STANDARD	1	
2	13102ZE2W00	PISTON, OS 0.25, OPTIONAL	1	
2	13103ZE2W00	PISTON, OS 0.50, OPTIONAL	1	
2	13104ZE2W00	PISTON, 0.75, OPTIONAL	1	
3	13111ZE2000	PIN, PISTON	1	
4	13200ZE2000	ROD ASSY., CONNECTING STANDARD	1	INCLUDES ITEMS W/*
4	13200ZE2305	ROD ASSY., CONNECTING, US 0.25, OPT.	1	
5*	90001ZE8000	BOLT, CONNECTING ROD	2	
6	90551ZE1000	CLIP, PISTON PIN 18MM	2	

RECOIL STARTER ASSY.

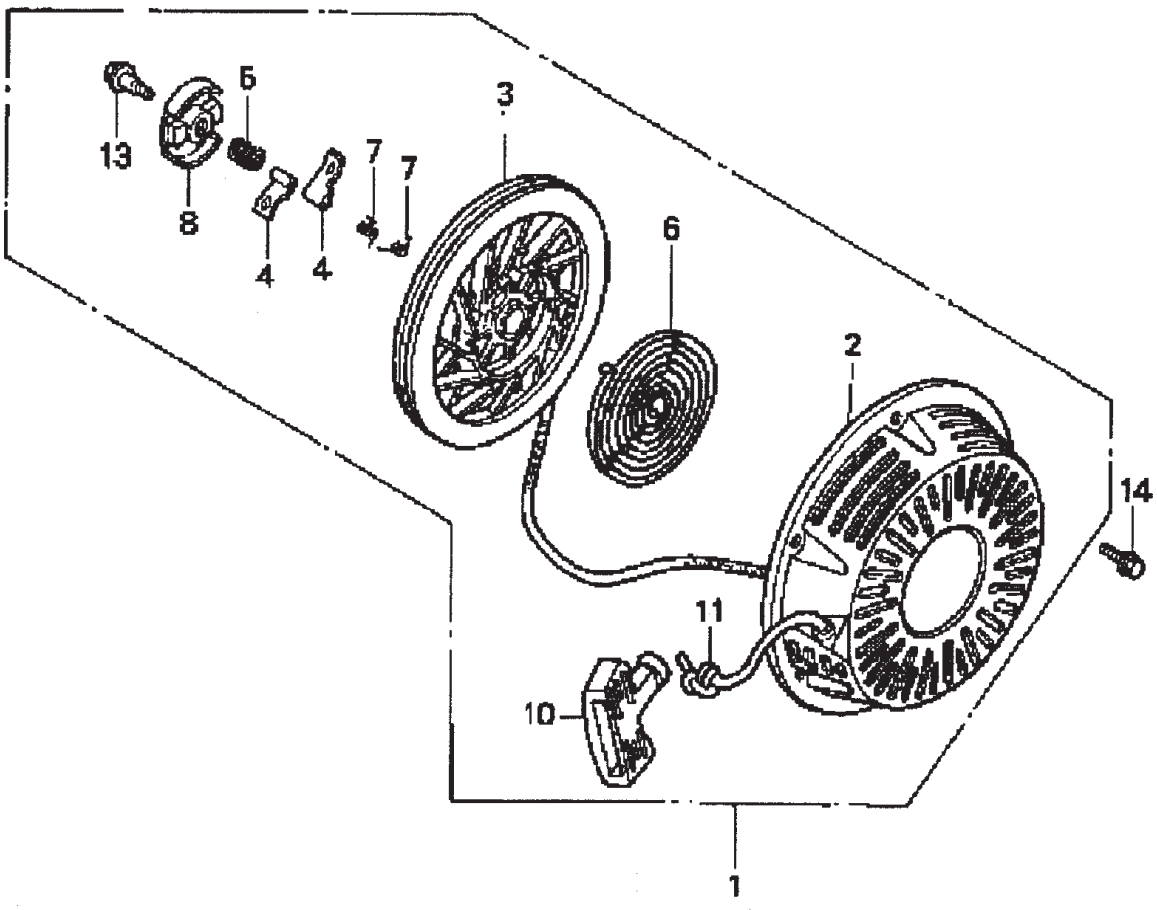

HONDA GX240K1QA2 ENGINE — RECOIL STARTER ASSY.

RECOIL STARTER ASSY.

NO.	PART NO.	PART NAME	QTY.	REMARKS
1	28400ZE2W01ZB	STARTER ASSY., RECOIL *NH1*, BLK	1	INCLUDES ITEMS W/*
2*	28410ZE2W01ZB	CASE COMP., RECOIL STARTER *NH1*, BLK	1	
3*	28421ZE2W01	PULLEY, RECOIL STARTER	1	
4*	28422ZE2W01	RATCHET, STARTER	2	
5*	28441ZE2W01	SPRING, FRICTION	1	
6*	28442ZE2W01	SPRING, STARTER RETURN	1	
7*	28443ZE2W01	SPRING RATCHET	2	
8*	28444ZE2W01	RETAINER, SPRING	1	
10*	28461ZE2W02	GRIP, STARTER	1	
11*	28462ZE2W11	ROPE, RECOIL STARTER	1	
13*	90004ZE2W01	SCREW, CENTER	1	
14	90008ZE2003	BOLT, FLANGE 6X10	3	

LABEL ASSY.

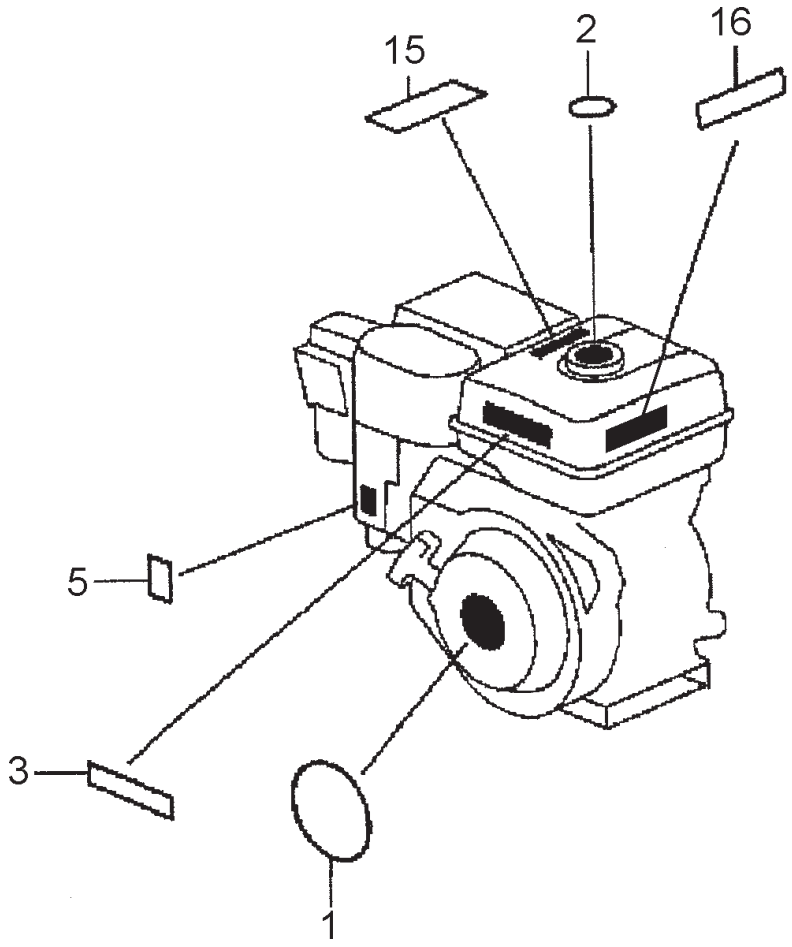

LABELS ASSY.

NO.	PART NO.	PART NAME	QTY.	REMARKS
1	87521ZE2W01	EMBLEM, INTERNAL	1	
2	87522ZE1810	MARK, CAUTION, EXTERNAL	1	
3	87522ZH9000	LABEL, CAUTION	1	
5	87528ZE2810	MARK, CHOKE, EXTERNAL	1	
15	87586ZH7W00	LABEL, FUEL CAUTION	1	
16	87532ZH8810	MARK, OIL ALERT	1	

AIR CLEANER ASSY.

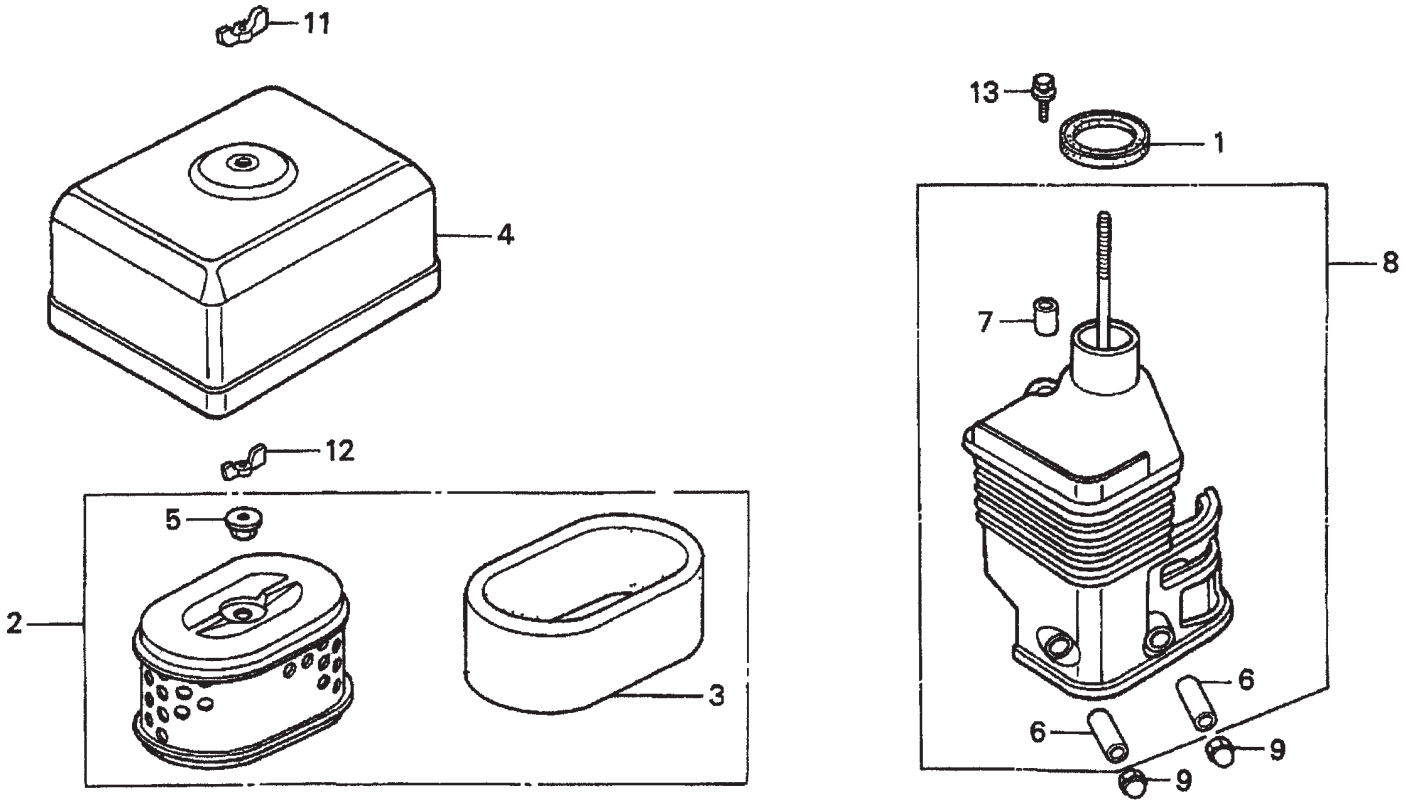

AIR CLEANER ASSY.

NO.	PART NO.	PART NAME	QTY.	REMARKS
1	16271ZE1000	GASKET, ELBOW	1	
2	17210ZE1517	ELEMENT, AIR CLEANER (DUAL)	1	INCLUDES ITEMS W/*
3*	17218ZE1505	FILTER, OUTER	1	
4	17230ZE1820	COVER, AIR CLEANER (DUAL)	1	
5*	17232891000	GROMMET, AIR CLEANER	1	
6#	17238ZE7010	COLLAR, AIR CLEANER	2	
7#	17239ZE1000	COLLAR B, AIR CLEANER	1	
8	17410ZE1020	ELBOW, AIR CLEANER	1	INCLUDES ITEMS W/#
9	9405006000	NUT, CAP 6MM	2	
11	90325044000	WINGNUT, TOOL BOX SETTING	1	
12	90325044000	WINGNUT, TOOL BOX SETTING	1	
13	957010602000	BOLT, FLANGE 6 X 20	1	

CAMSHAFT ASSY.

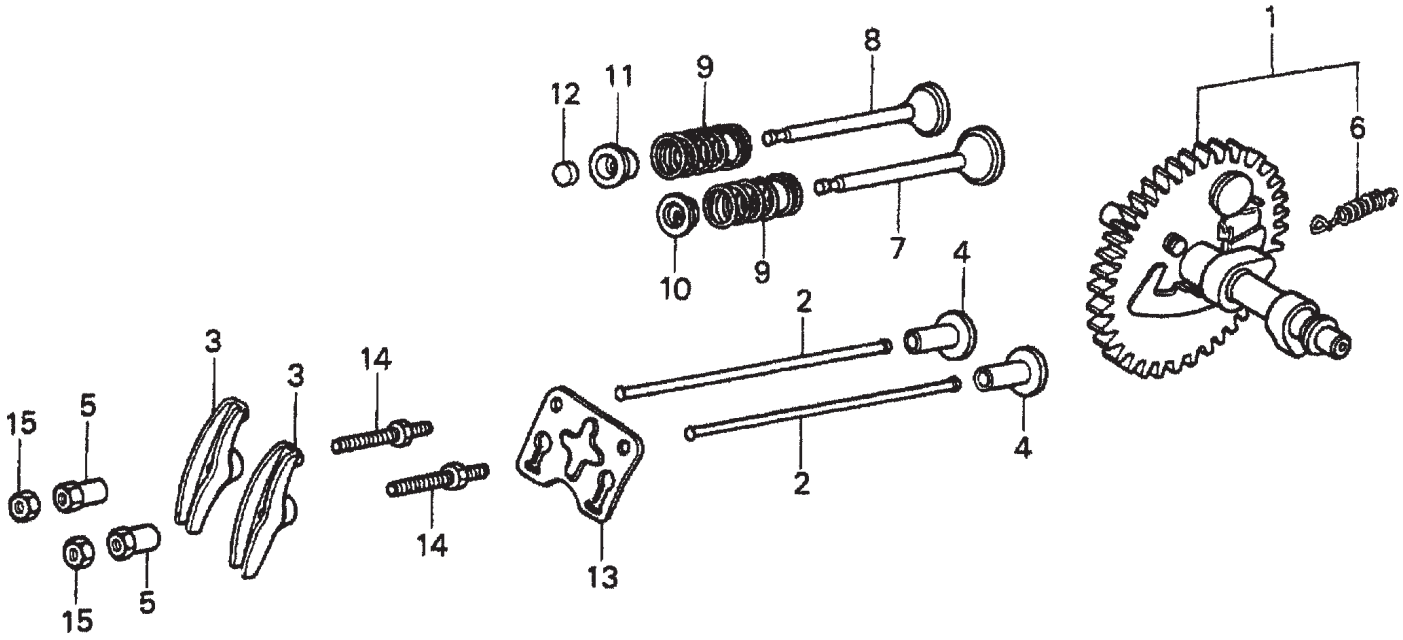

CAMSHAFT ASSY.

NO.	PART NO.	PART NAME	QTY.	REMARKS
1	14100ZE1812	CAMSHAFT ASSEMBLY	1	INCLUDES ITEMS W/*
2	14410ZE1010	ROD, PUSH	2	
3	14431ZE1000	ARM, VALVE ROCKER	2	
4	14441ZE1010	LIFTER, VALVE	2	
5	14451ZE1013	PIVOT, ROCKER ARM	2	
6	14568ZE1000	SPRING, WEIGHT RETURN	1	
7	14711ZF1000	VALVE, INTAKE	1	
8	14721ZF1000	VALVE, EXHAUST	1	
9	14751ZF1000	SPRING VALVE	2	
10	14771ZE1000	RETAINER, INTAKE VALVE SPRING	1	
11	14773ZE1000	RETAINER, EXHAUST VALVE SPRING	1	
12	14781ZE1000	ROTATOR, VALVE	1	
13	14791ZE1010	PLATE, PUSH ROD GUIDE	1	
14	90012ZE0010	BOLT, PIVOT 8MM	2	
15	90206ZE1000	NUT, PIVOT ADJ.	2	

CARBURETOR ASSY.

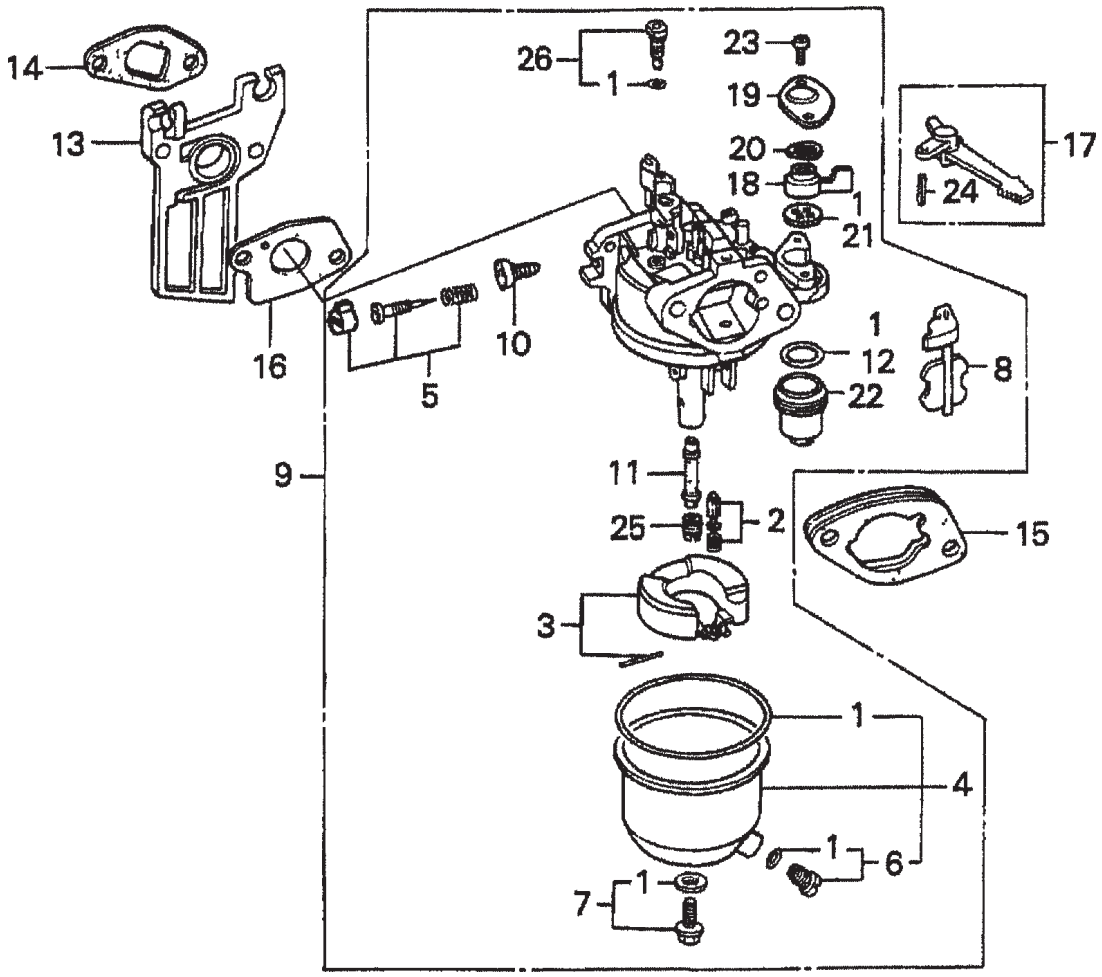

CARBURETOR ASSY.

NO.	PART NO.	PART NAME	QTY.	REMARKS
1*#+%■	16010ZE1812	GASKET SET	1	
2*	16011ZE0005	VALVE SET, FLOAT	1	
3	16013ZE0005	FLOAT SET	1	
4*	16015ZE0831	CHAMBER SET, FLOAT	1	INCLUDES ITEMS/#
5*	16016ZH7W01	SCREW SET	1	
6*#	16024ZE1811	SCREW SET, DRAIN	1	INCLUDES ITEM W/+
7*	16028ZE0005	SCREW SET B	1	INCLUDES ITEM W/%
8*	16044ZE0005	CHOKE SET	1	
9	16100ZH8W51	CARBURETOR ASSEMBLY, BE65B B	1	INCLUDES ITEMS/*
10*	16124ZE0005	SCREW, THROTTLE STOP	1	
11*	16166ZH8W50	NOZZLE, MAIN	1	
12*	16173001004	O- RING	1	
13	16211ZE1000	INSULATOR, CARBURETOR	1	
14	16212ZH8800	GASKET, INSULATOR	1	
15	16220ZE1020	SPACER, CARBURETOR	1	
16	16221ZH8801	GASKET, CARBURETOR	1	
17	16610ZE1000	LEVER, CHOKE STANDARD	1	INCLUDES ITEM W/$
18*	16953ZE1812	LEVER, VALVE	1	
19	16954ZE1812	PLATE, LEVER SETTING	1	
20*	16956ZE1811	SPRING, VALVE LEVER	1	
21*	16957ZE1812	GASKET, VALVE	1	
22*	16967ZE0811	CUP, FUEL STRAINER	1	
23*	93500030060H	SCREW, PAN 3 X 6	2	
24$	9430520122	PIN, SPRING 2 X 12	1	
25*	99101ZH80650	JET, MAIN #65 (OPTIONAL)	1	
25*	99101ZH80680	JET, MAIN #68 (OPTIONAL)	1	
26*	99204ZE00350	JET SET, PILOT #35	1	INCLUDES ITEM W/■

CONTROL ASSY.

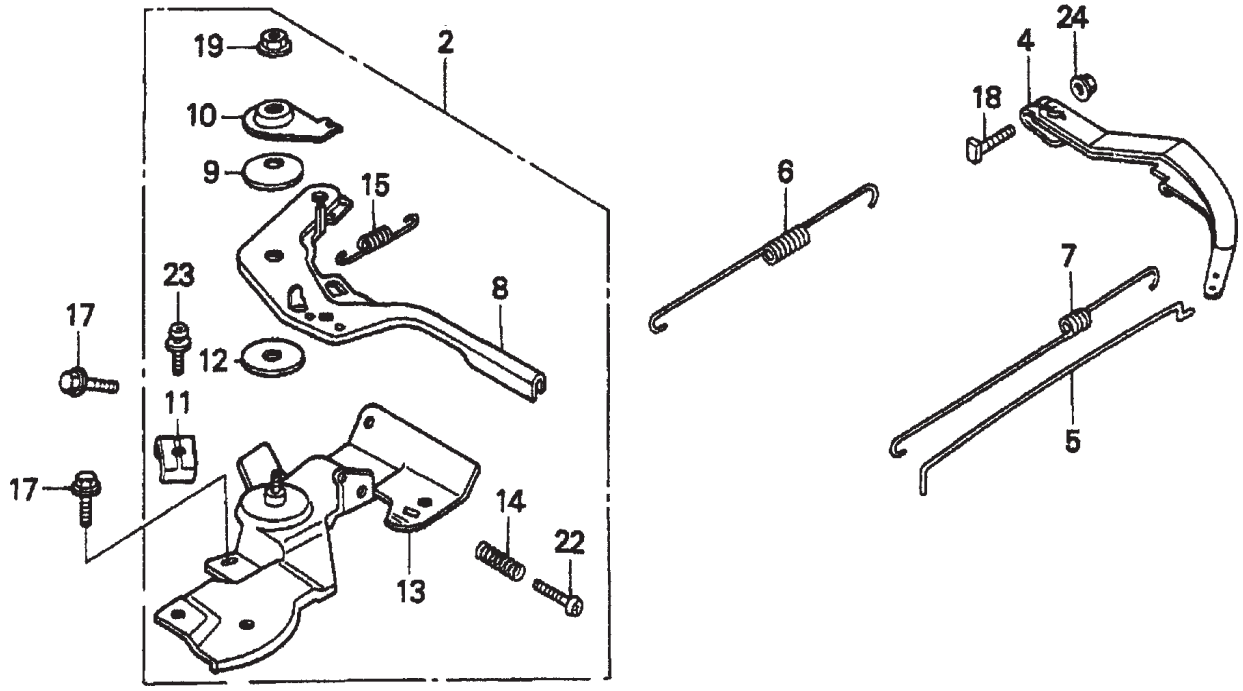

CONTROL ASSY.

NO.	PART NO.	PART NAME	QTY.	REMARKS
2	16500ZH8823	CONTROL ASSEMBLY, REMOTE	1	INCLUDES ITEMS W/*
4	16551ZE0010	ARM, GOVERNOR	1	
5	16555ZE1000	ROD, GOVERNOR	1	
6	16561ZE1020	SPRING GOVERNOR	1	
7	16562ZE1020	SPRING, THROTTLE RETURN	1	
8*	16571ZH8020	LEVER, CONTROL	1	
9*	16574ZE1000	SPRING, LEVR	1	
10*	16575ZH8000	WASHER, CONTROL LEVER	1	
11*	16576891000	HOLDER, CABLE	1	
12*	16578ZE1000	SPACER, CONTROL LEVER	1	
13*	16580ZH8812	BASE, CONTROL (REMOTE)	1	
14*	16584883300	SPRING, CONTROL ADJUSTING	1	
15*	16592ZE1810	SPRING, CABLE RETURN	1	
17	90013883000	BOLT, FLANGE 6 X 12 (CT200)	2	
18	90016ZE5010	BOLT, GOVERNOR ARM	1	
19*	90114SA0000	NUT, SELF- LOCK 6MM	1	
22*	93500050250H	SCREW, PAN 5 X 25	1	
23*	938930501600	SCREW, WASHER 5 X 16	1	
24	9405006000	NUT, FLANGE 6MM	1	

CRANKCASE COVER ASSY.

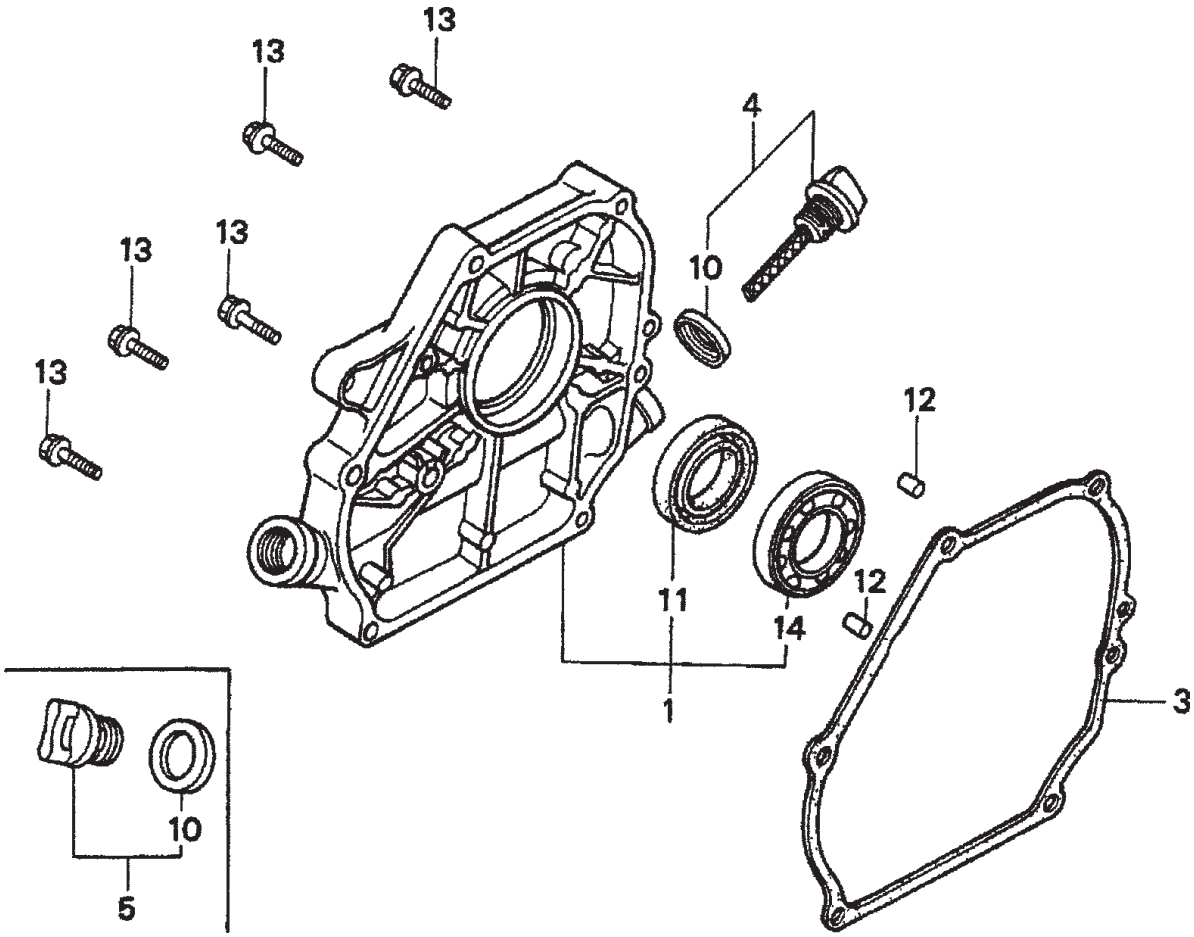

HONDA GX160K1QX2 — CRANKCASE COVER ASSY.

CRANKCASE COVER ASSY.

NO.	PART NO.	PART NAME	QTY.	REMARKS
1	11300ZE1641	COVER ASSEMBLY, CRANKCASE (U- TYPE)	1	INCLUDES ITEMS W/*
3	11381ZH8801	GASKET, CASE COVER (NON- ASBESTOS)	1	
4	15600ZE1003	CAP ASSEMBLY, OIL FILLER	1	INCLUDES ITEMS W/#
5	15600ZG4003	CAP ASSEMBLY, OIL FILLER	1	INCLUDES ITEMS W/%
10%#	15625ZE1003	GASKET, OIL FILLER CAP	1	
11*	91202883005	OIL SEAL 25 X 41 X 6	1	
12	9430108140	PIN A, DOWEL 8 X 14	2	
13	957010803200	BOLT, FLANGE 8 X 32	6	
14*	961006205010	BEARING, RADIAL BALL 6205	1	

CRANKSHAFT ASSY.

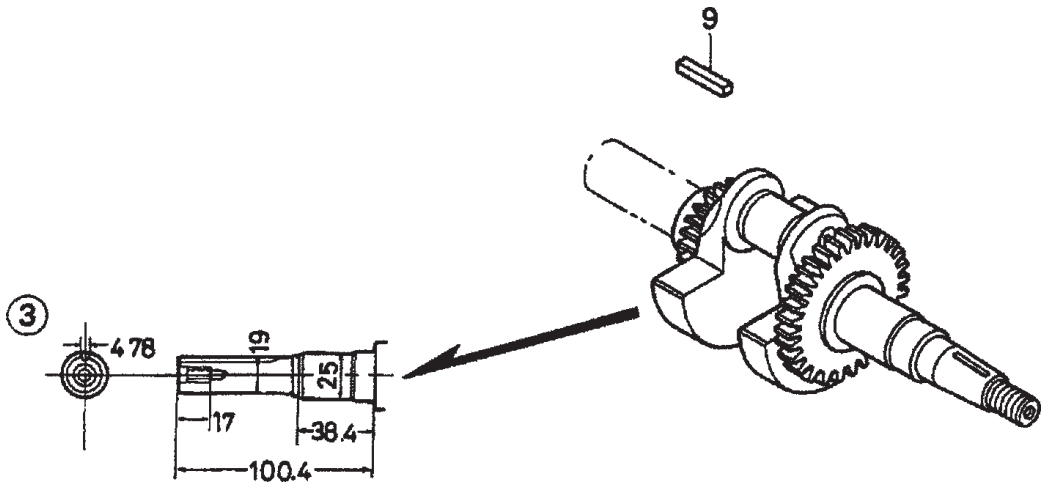

CRANKSHAFT ASSY.

NO.	PART NO.	PART NAME	QTY.	REMARKS
3	13310ZE1622	CRANKSHAFT, Q- TYPE	1	
9	501019	KEY, 3/16" x 45 MM	1	

CYLINDER BARREL ASSY.

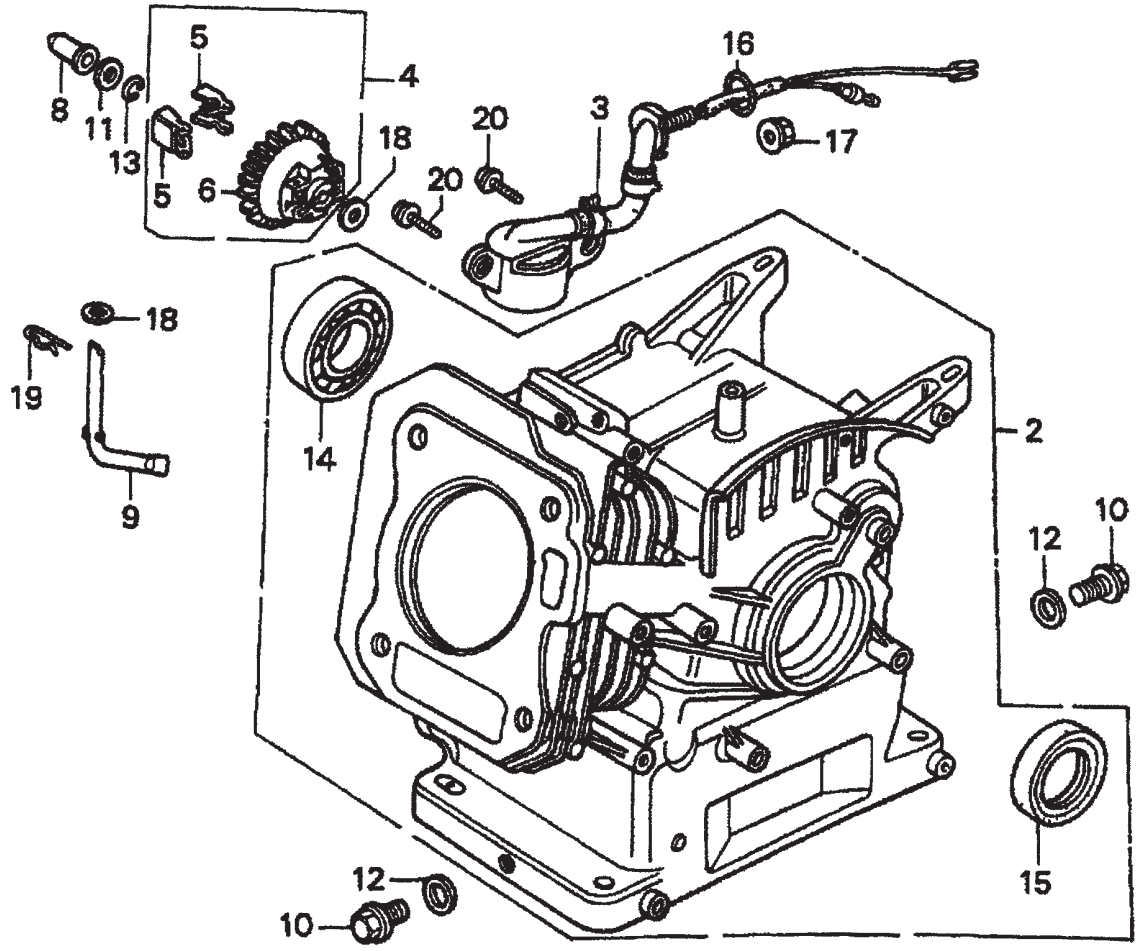

CYLINDER BARREL ASSY.

NO.	PART NO.	PART NAME	QTY.	REMARKS
2	12000ZH8811	CYLINDER ASSEMBLY, OIL ALERT	1	INCLUDES ITEMS W/*
3	15510ze1033	SWITCH ASSEMBLY, OIL LEVEL		
4	16510ZE1000	GOVERNOR ASSEMBLY	1	INCLUDES ITEMS W/#
5#	16511ZE1000	WEIGHT, GOVERNOR	2	
6#	16512ZE1000	HOLDER, GOVERNOR WEIGHT	1	
8	16531ZE1000	SLIDER, GOVERNOR	1	
9	16541ZE1000	SHAFT, GOVERNOR ARM	1	
10	90131ZE1000	BOLT, DRAIN PLUG	2	
11	80451ZE1000	WASHER, THRUST 6MM	1	
12	90601ZE1000	WASHER, DRAIN PLUG 10.2MM	2	
13	90602ZE1000	CLIP, GOVERNOR HOLDER	1	
14*	91001ZF1003	BEARING, RADIAL BALL 6205	1	
15*	91202883005	OIL SEAL 25 X 41 X 6	1	
16	91353671003	O- RING 13.5 X 1.5 (ARAI)	1	
17	9405010000	NUT, FLANGE 10MM	1	
18	58176	WASHER, PLAIN 6MM	2	
19	9425108000	PIN, LOCK 8MM	1	
20	957010601200	BOLT, FLANGE 6 X 12	2	

CYLINDER HEAD ASSY.

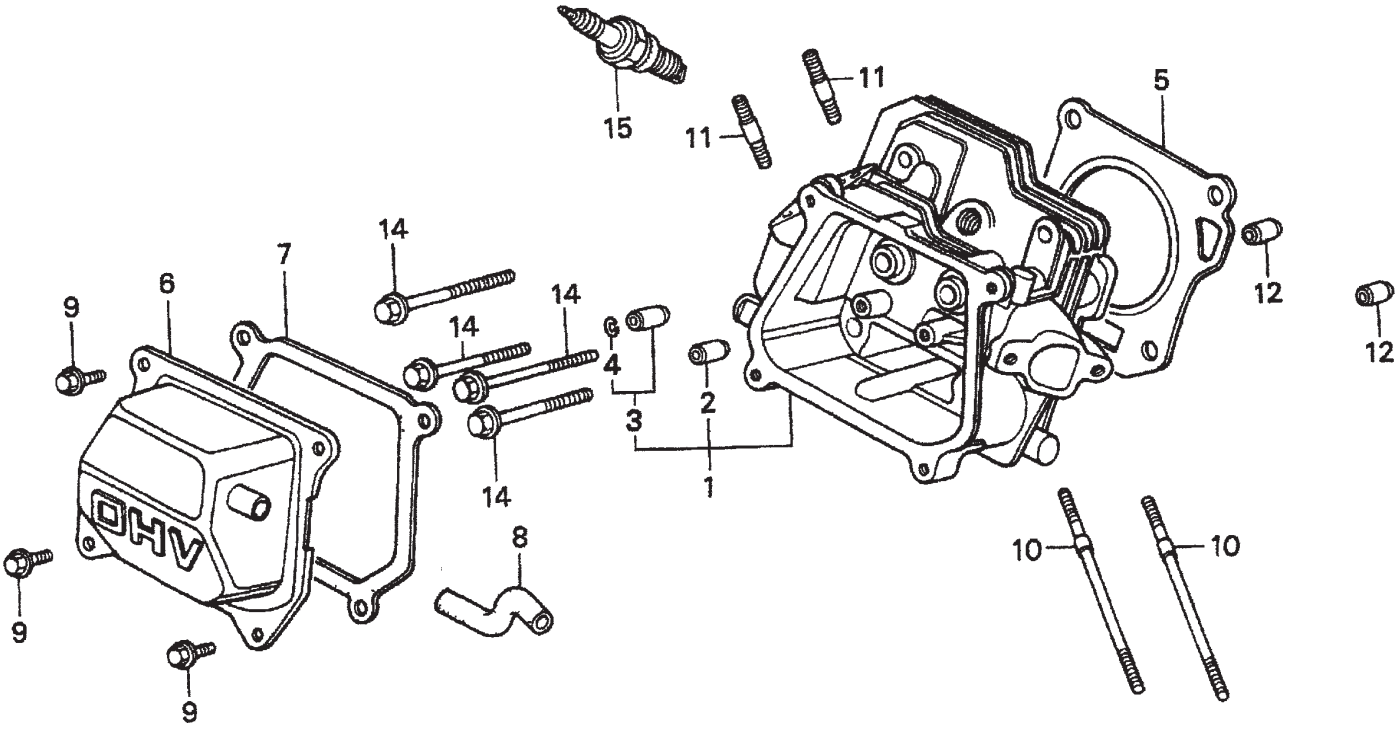

HONDA GX160K1QX2 — CYLINDER HEAD ASSY.

CYLINDER HEAD ASSY.

NO.	PART NO.	PART NAME	QTY.	REMARKS
1	12210ZH8000	CYLINDER HEAD	1	INCLUDES ITEMS W/*
2*	12204ZE1306	GUIDE, VALVE OS (OPTIONAL	1	
3*	12205ZE1315	GUIDE, EXHAUST VALVE OS (OPTIONAL)	1	INCLUDES ITEM W/%
4%*	12216ZE5300	CLIP, VALVE GUIDE	1	
5	12251ZF1800	GASKET, CYLINDER HEAD	1	
6	12310ZE1020	COVER, HEAD	1	
7	12391ZE1000	GASKET, CYLINDER HEAD COVER	1	
8	15721ZH8000	TUBE, BREATHER	1	
9	90016ZE1000	BOLT, FLANGE 6 X13	4	
10	90043ZE1020	BOLT, STUD 6 X109	2	
11	90047ZE1000	BOLT, STUD 8 X 32	2	
12	9430110160	PIN A, DOWEL 10 X16	2	
14	957230806000	BOLT, FLANGE 8 X60	4	
15	9807956846	SPARK PLUG BPR6ES (NGK)	1	

FAN COVER ASSY.

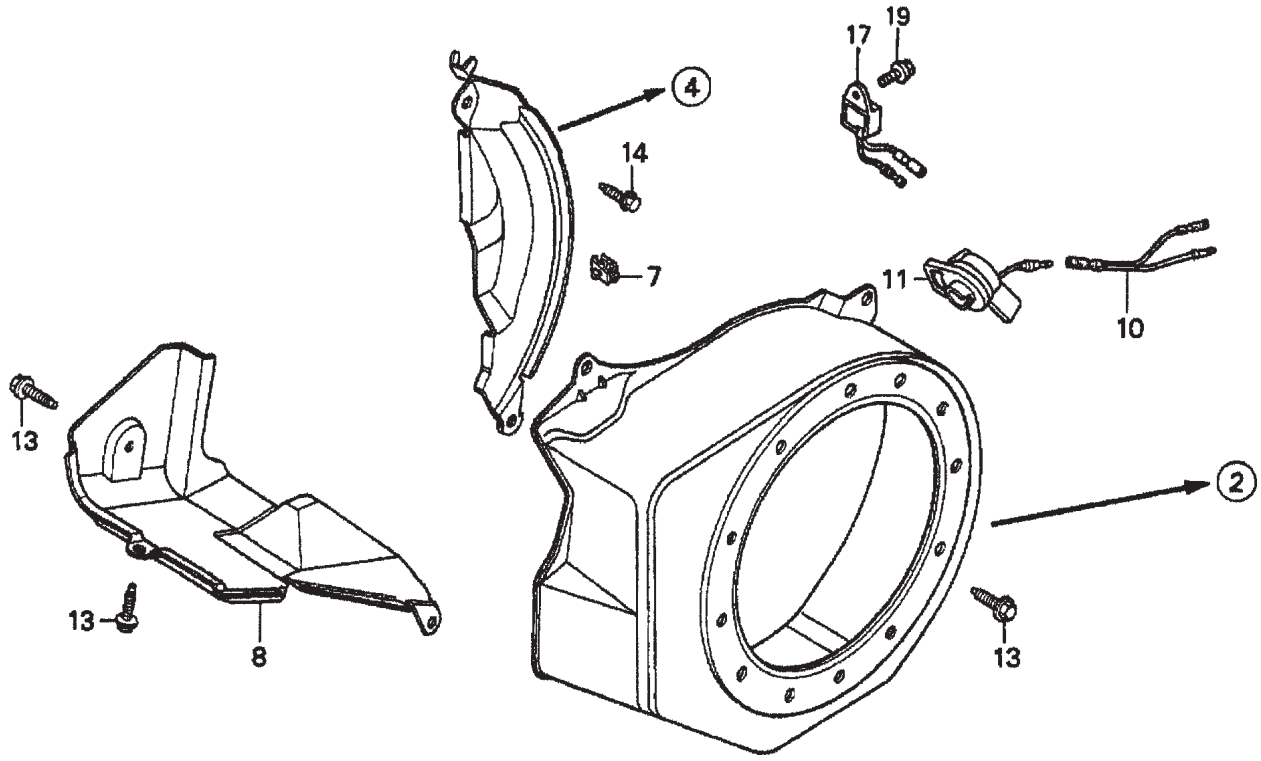

FAN COVER ASSY.

NO.	PART NO.	PART NAME	QTY.	REMARKS
2	19610ZE1000ZC	COVER, FAN "NH1" (BLACK)	1	
4	19611ZH8810	PLATE, SIDE (OIL ALERT)	1	
7	90601ZH7013	CLIP, HARNESS	1	
8	19630ZH8000	SHROUD	1	
10	32197ZH8003	SUB- HARNESS	1	
11	36100ZE1015	SWITCH ASSEMBLY, ENGINE STOP	1	
13	90013883000	BOLT, FLANGE 6 X12 (CT200)	6	
14	90022888010	BOLT, FLANGE 6 X20 (CT200)	1	
17	34150ZH7003	ALERT UNIT, OIL	1	
19	957010600800	BOLT, FLANGE 6 X8	1	

FLYWHEEL ASSY.

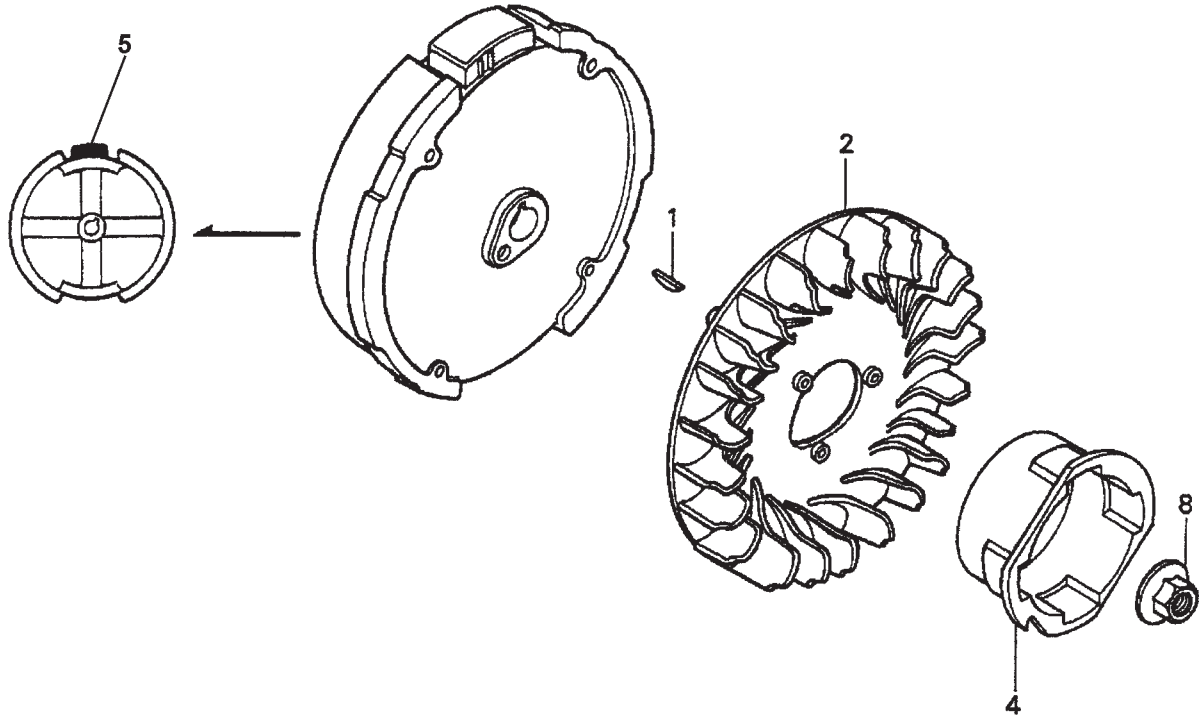

FLYWHEEL ASSY.

NO.	PART NO.	PART NAME	QTY.	REMARKS
1	13331357000	KEY, SPECIAL WOODRUFF (25 X18)	1	
2	19511ZE1000	FAN, COOLING	1	
4	28451ZH8003	PULLEY, STARTER	1	
5	31100ZE1010	FLYWHEEL	1	
5	31100ZE1810	FLYWHEEL, LAMP	1	
8	90201878003	NUT, SPECIAL 14MM	1	

FUEL TANK ASSY.

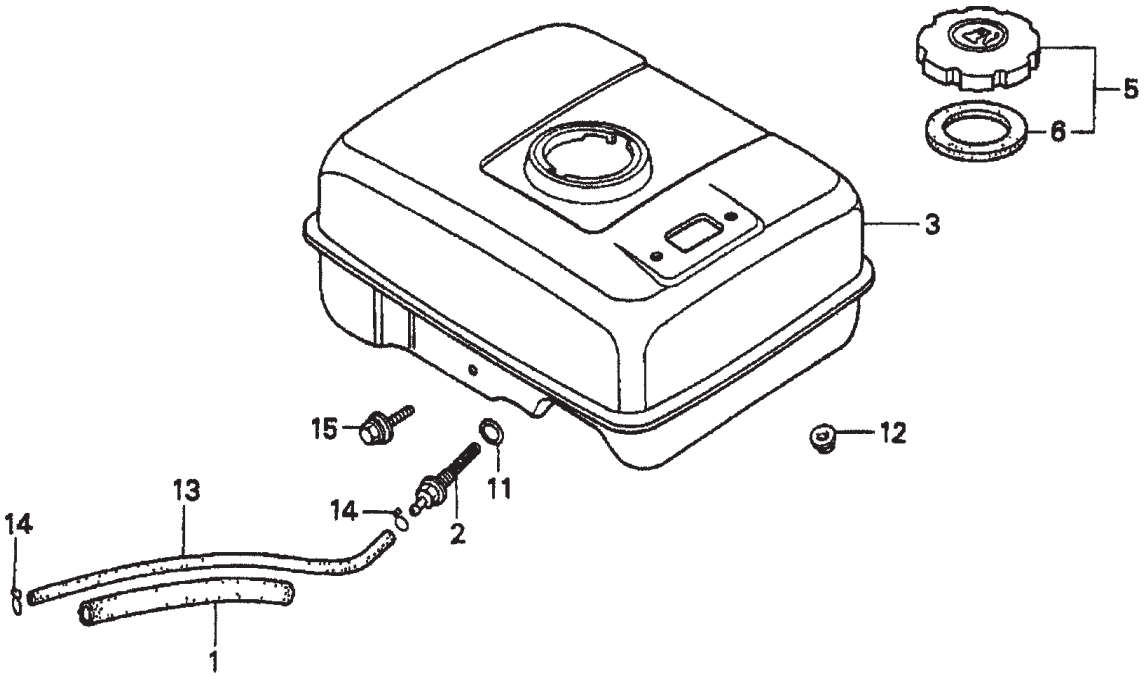

FUEL TANK ASSY.

NO.	PART NO.	PART NAME	QTY.	REMARKS
1	16854ZH8000	RUBBER, SUPPORTER 107MM	1	
2	16955ZE1000	JOINT, FUEL TANK	1	
3	17510ZE1020ZF	TANK, FUEL *NH1* (BLACK)	1	
5	17620ZH7023	CAP, FUEL FILLER	1	..... INCLUDES ITEM W/*
6*	17631ZH7003	GASKET, FUEL FILLER CAP	1	
11	91353671003	O- RING 13.5 X1.5 (ARAI)	1	
12	9405006000	NUT, FLANGE 6MM	2	
13	950014500360M	BULK HOSE, FUEL 4.5 X 3000 (4.5 X 140)	1	
14	9500202080	CLIP, TUBE B8	2	
15	957010602500	BOLT, FLANGE 6 X 25	1	

IGNITION COIL ASSY.

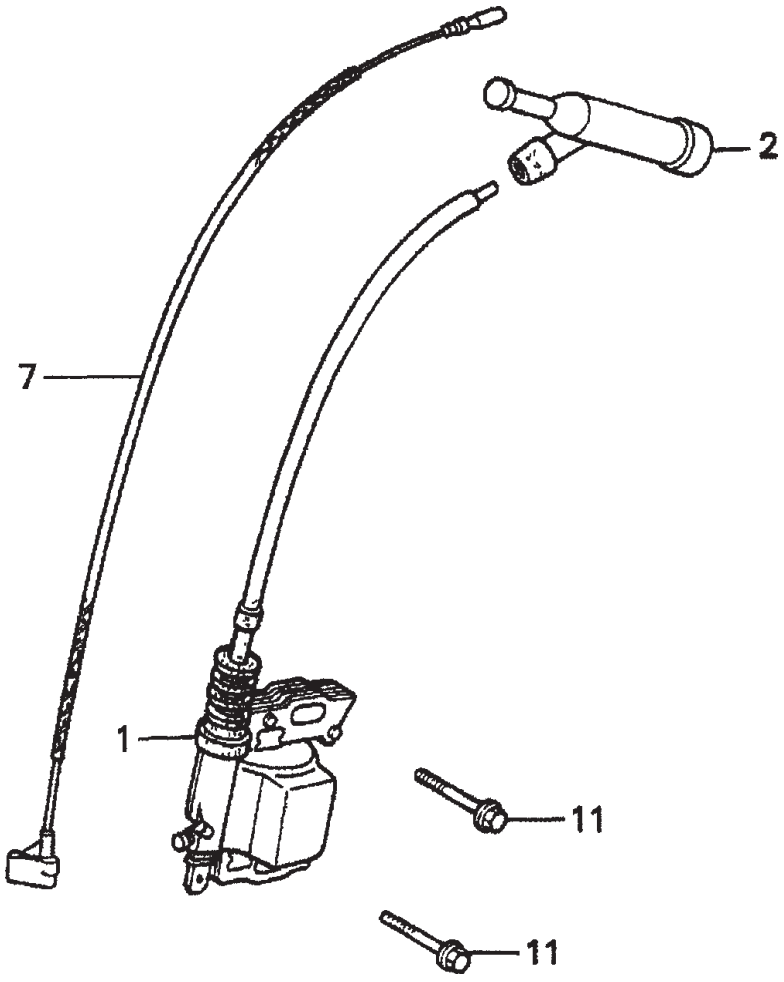

IGNITION COIL ASSY.

NO.	PART NO.	PART NAME	QTY.	REMARKS
1	30500ZE1043	COIL ASSEMBLY, IGNITION	1	
2	30700ZE1013	CAP ASSEMBLY, NOISE SUPPRESSOR	1	
7	36101ZE1010	WIRE, STOP SWITCH 370MM	1	
11	957010602500	BOLT, FLANGE 6 X25	2	

MUFFLER ASSY.

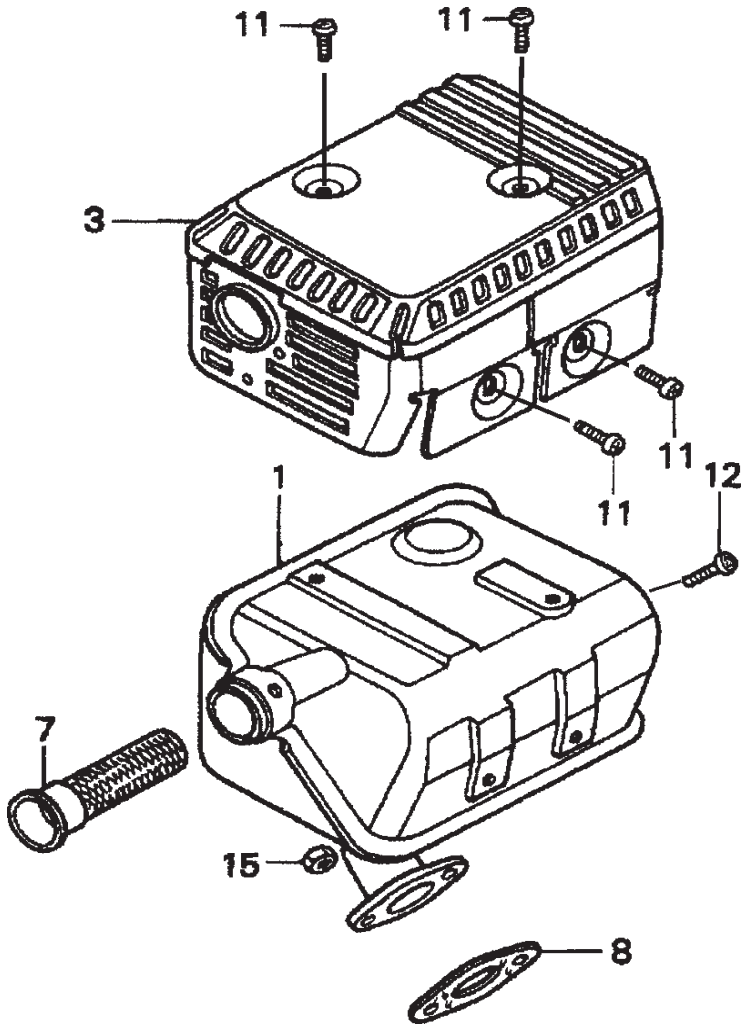

MUFFLER ASSY.

NO.	PART NO.	PART NAME	QTY.	REMARKS
1	18310ZF1000	MUFFLER	1	
1	18310ZH8810	MUFFLER (OPTIONAL)	1	
3	18320ZF1H01	PROTECTOR, MUFFLER	1	
7	18355ZE1000	ARRESTER, SPARK (OPTIONAL)	1	
8	18381ZH8800	GASKET, MUFFLER	1	
11	90050ZE1000	SCREW, TAPPING 5 X 8 (OPTIONAL	4	
12	90055ZE1000	SCREW, TAPPING 4 X 6 (OPTIONAL)	1	
15	02010860	NUT, HEX. 8MM	2	

PISTON ASSY.

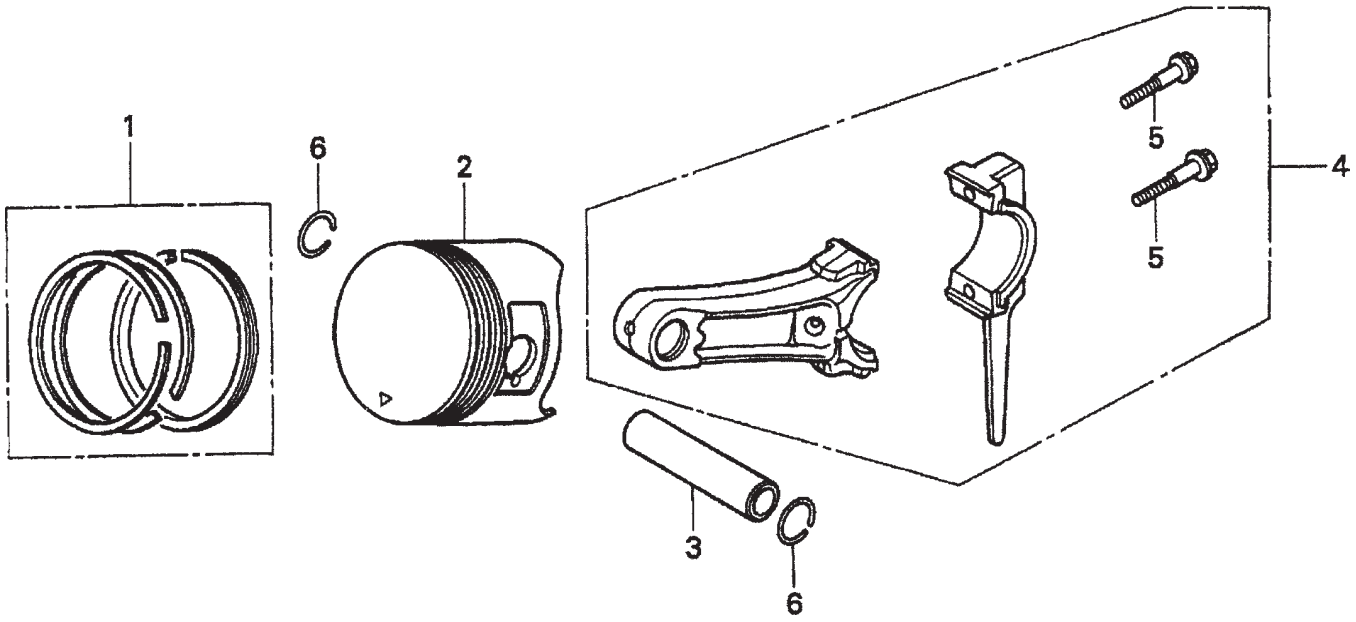

PISTON ASSY.

NO.	PART NO.	PART NAME	QTY.	REMARKS
1	13010ZH8941	RING SET, PISTON (STANDARD)	1	
1	13011ZH8941	RING SET, PISTON (OS 0.25), OPTIONAL	1	
1	13012ZH8941	RING SET, PISTON (OS 0.50), OPTIONAL	1	
1	13013ZH8941	RING SET, PISTON (0.75), OPTIONAL	1	
2	13101ZH8010	PISTON (STANDARD)	1	
2	13102ZH8000	PISTON (OS 0.25), OPTIONAL	1	
2	13101ZH8010	PISTON (OS 0.50), OPTIONAL	1	
2	13104ZH8000	PISTON (0.75), OPTIONAL	1	
3	13111ZE1000	PIN, PISTON	1	
4	132A0ZE1000	ROD ASSY., CONNECTING (US 0.25), OPT.	1	
4	13200ZE1010	ROD ASSEMBLY, CONNECTING	1	
5	90001ZE1000	BOLT, CONNECTING ROD	2	
6	90551ZE1000	CLIP, PISTON PIN 18MM	2	

RECOIL STARTER ASSY.

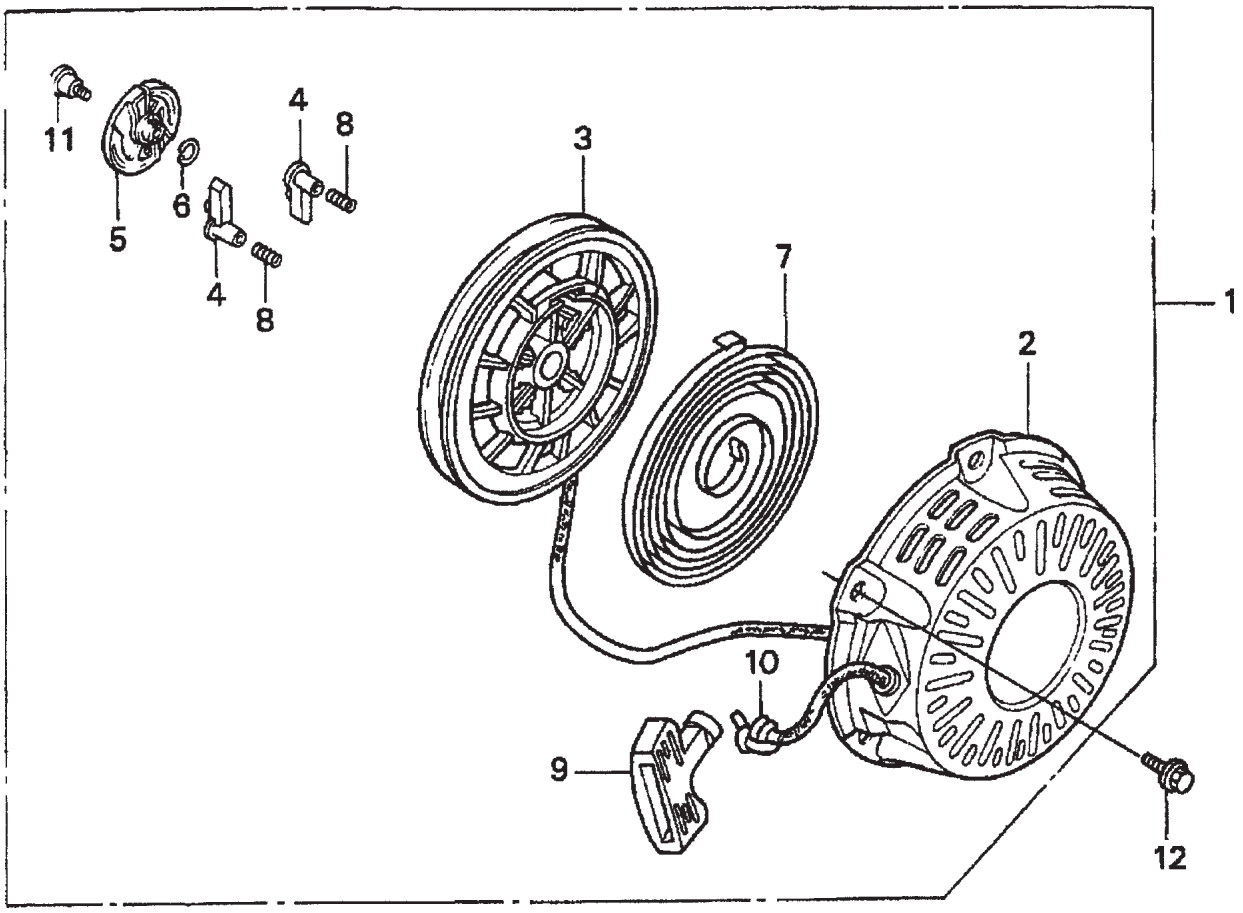

HONDA GX160K1QX2 — RECOIL STARTER ASSY.

RECOIL STARTER ASSY.

NO.	PART NO.	PART NAME	QTY.	REMARKS
1	28400ZH8013ZB	STARTER ASSY., RECOIL "NH1" BLACK	1	INCLUDES ITEM W/*
2*	28410ZH8003ZB	CASE, RECOIL STARTER "NH1" BLACK	1	
3*	28420ZH8013	REEL, RECOIL STARTER	1	
4*	28422ZH8013	RATCHET, STARTER	2	
5*	28433ZH8003	GUIDE, RATCHET	1	
6*	28441ZH8003	SPRING, FRICTION	1	
7*	28442ZH8003	SPRING, RECOIL STARTER	1	
8*	28443ZH8003	SPRING, RETURN	2	
9*	28461ZH8003	KNOB, RECOIL STARTER	1	
10*	28462ZH8003	ROPE, RECOIL STARTER	1	
11*	90003ZH8003	SCREW, SETTING	1	
12	90008ZE2003	BOLT, FLANGE 6 X10	3	

ENGINE LABELS ASSY.

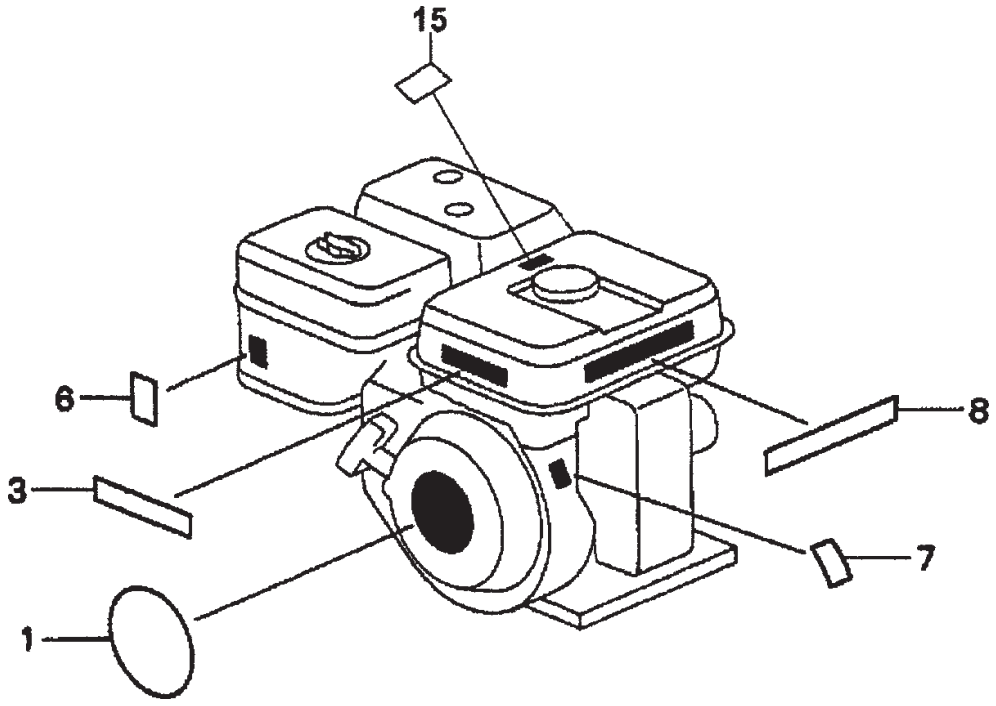

ENGINE LABELS ASSY.

NO.	PART NO.	PART NAME	QTY.	REMARKS
1	87521ZH8020	ENBLEM 5.5	1	
3	87522ZH9000	LABEL, CAUTION	1	
6	87528ZE1810	MARK, CHOKE	1	
7	87530ZH8810	LABEL, SPECIFICATION (EXTERNAL)	1	
8	87532ZH8810	MARK, OIL ALERT (E)	1	
15	887586ZH7W00	LABEL, FUEL CAUTION	1	

TERMS AND CONDITIONS OF SALE — PARTS

PAYMENT TERMS

Terms of payment for parts are net 30 days.

FREIGHT POLICY

All parts orders will be shipped collect or prepaid with the charges added to the invoice. All shipments are F.O.B. point of origin. Multiquip's responsibility ceases when a signed manifest has been obtained from the carrier, and any claim for shortage or damage must be settled between the consignee and the carrier.

MINIMUM ORDER

The minimum charge for orders from Multiquip is $15.00 net. Customers will be asked for instructions regarding handling of orders not meeting this requirement.

RETURNED GOODS POLICY

Return shipments will be accepted and credit will be allowed, subject to the following provisions:

1. A Returned Material Authorization must be approved by Multiquip prior to shipment.
2. To obtain a Return Material Authorization, a list must be provided to Multiquip Parts Sales that defines item numbers, quantities, and descriptions of the items to be returned.
    a. The parts numbers and descriptions must match the current parts price list.
    b. The list must be typed or computer generated.
    c. The list must state the reason(s) for the return.
    d. The list must reference the sales order(s) or invoice(s) under which the items were originally purchased.
    e. The list must include the name and phone number of the person requesting the RMA.
3. A copy of the Return Material Authorization must accompany the return shipment.
4. Freight is at the sender's expense. All parts must be returned freight prepaid to Multiquip's designated receiving point.
5. Parts must be in new and resalable condition, in the original Multiquip package (if any), and with Multiquip part numbers clearly marked.
6. The following items are not returnable:
    a. Obsolete parts. (If an item is in the price book and shows as being replaced by another item, it is obsolete.)
    b. Any parts with a limited shelf life (such as gaskets, seals, "O" rings, and other rubber parts) that were purchased more than six months prior to the return date.
    c. Any line item with an extended dealer net price of less than $5.00.
    d. Special order items.
    e. Electrical components.
    f. Paint, chemicals, and lubricants.
    g. Decals and paper products.
    h. Items purchased in kits.
7. The sender will be notified of any material received that is not acceptable.
8. Such material will be held for five working days from notification, pending instructions. If a reply is not received within five days, the material will be returned to the sender at his expense.
9. Credit on returned parts will be issued at dealer net price at time of the original purchase, less a 15% restocking charge.
10. In cases where an item is accepted, for which the original purchase document can not be determined, the price will be based on the list price that was effective twelve months prior to the RMA date.
11. Credit issued will be applied to future purchases only.

PRICING AND REBATES

Prices are subject to change without prior notice. Price changes are effective on a specific date and all orders received on or after that date will be billed at the revised price. Rebates for price declines and added charges for price increases will not be made for stock on hand at the time of any price change.

Multiquip reserves the right to quote and sell direct to Government agencies, and to Original Equipment Manufacturer accounts who use our products as integral parts of their own products.

SPECIAL EXPEDITING SERVICE

A $35.00 surcharge will be added to the invoice for special handling including bus shipments, insured parcel post or in cases where Multiquip must personally deliver the parts to the carrier.

LIMITATIONS OF SELLER'S LIABILITY

Multiquip shall not be liable hereunder for damages in excess of the purchase price of the item with respect to which damages are claimed, and in no event shall Multiquip be liable for loss of profit or good will or for any other special, consequential or incidental damages.

LIMITATION OF WARRANTIES

No warranties, express or implied, are made in connection with the sale of parts or trade accessories nor as to any engine not manufactured by Multiquip. Such warranties made in connection with the sale of new, complete units are made exclusively by a statement of warranty packaged with such units, and Multiquip neither assumes nor authorizes any person to assume for it any other obligation or liability whatever in connection with the sale of its products. Apart from such written statement of warranty, there are no warranties, express, implied or statutory, which extend beyond the description of the products on the face hereof.

Effective: February 22, 2006

NOTE PAGE

OPERATION AND PARTS MANUAL

HERE'S HOW TO GET HELP

PLEASE HAVE THE MODEL AND SERIAL NUMBER ON-HAND WHEN CALLING

UNITED STATES

Multiquip Corporate Office

18910 Wilmington Ave.
Carson, CA 90746
Contact: mq@multiquip.com

Tel. (800) 421-1244
Fax (800) 537-3927

MQ Parts Department

800-427-1244
310-537-3700

Fax: 800-672-7877
Fax: 310-637-3284

Service Department

800-421-1244
310-537-3700

Fax: 310-537-4259

Warranty Department

800-421-1244
310-537-3700

Fax: 310-537-1173

Technical Assistance

800-478-1244

Fax: 310-943-2238

MEXICO

MQ Cipsa

Carr. Fed. Mexico-Puebla KM 126.5
Momoxpan, Cholula, Puebla 72760 Mexico
Contact: pmastretta@cipsa.com.mx

Tel: (52) 222-225-9900
Fax: (52) 222-285-0420

UNITED KINGDOM

Multiquip (UK) Limited Head Office

Unit 2, Northpoint Industrial Estate,
Globe Lane,
Dukinfield, Cheshire SK16 4UJ
Contact: sales@multiquip.co.uk

Tel: 0161 339 2223
Fax: 0161 339 3226

CANADA

Multiquip

4110 Industriel Boul.
Laval, Quebec, Canada H7L 6V3
Contact: jmartin@multiquip.com

Tel: (450) 625-2244
Tel: (877) 963-4411
Fax: (450) 625-8664

© COPYRIGHT 2011, MULTIQUIP INC.

Multiquip Inc and the MQ logo are registered trademarks of Multiquip Inc. and may not be used, reproduced, or altered without written permission. All other trademarks are the property of their respective owners and used with permission.

This manual MUST accompany the equipment at all times. This manual is considered a permanent part of the equipment and should remain with the unit if resold.

The information and specifications included in this publication were in effect at the time of approval for printing. Illustrations, descriptions, references and technical data contained in this manual are for guidance only and may not be considered as binding. Multiquip Inc. reserves the right to discontinue or change specifications, design or the information published in this publication at any time without notice and without incurring any obligations.

Your Local Dealer is:

MULTIQUIP®