OPERATION MANUAL

MULTIQUIP®

MULTIQUIP WHITEMAN SERIES

MODEL
WBH-21EFP
POWER BUGGY
(B&S VANGUARD 18 HP PROPANE DRIVEN ELECTRIC START)

Revision #7 (09/27/24)

To find the latest revision of this publication, visit our website at:
www.multiquip.com



THIS MANUAL MUST ACCOMPANY THE EQUIPMENT AT ALL TIMES.


WARNING
CANCER &
REPRODUCTIVE HARM
www.P65Warnings.ca.gov
P/N 38707

WBH-21EFP Power Buggy

Proposition 65 Warning 2
Table of Contents..... 3
Safety Information 4–10
Lifting Procedures.....11–13
Specifications (Buggy)..... 14
Specifications (Engine)..... 15
Dimensions..... 16
General Information..... 17
Components 18
Basic Engine..... 19
Inspection 20–23
Operation..... 24–29
Maintenance 30–38
Troubleshooting (Buggy) 39
Troubleshooting (Engine)) 40–41
Hydraulic System Diagram (Eaton) 42
Hydraulic Hose Connections (Eaton) 43
Hydraulic System Diagram (Hydro-Gear)..... 44
Hydraulic Hose Connections (Hydro-Gear)..... 45
Engine Wiring Diagram..... 46

NOTICE

Specifications and part numbers are subject to change without notice.

Do not operate or service the equipment before reading the entire manual. Safety precautions should be followed at all times when operating this equipment. Failure to read and understand the safety messages and operating instructions could result in injury to yourself and others.



SAFETY MESSAGES

The four safety messages shown below will inform you about potential hazards that could injure you or others. The safety messages specifically address the level of exposure to the operator and are preceded by one of four words: **DANGER, WARNING, CAUTION** or **NOTICE.**

SAFETY SYMBOLS

DANGER

Indicates a hazardous situation which, if not avoided, **WILL** result in **DEATH** or **SERIOUS INJURY.**

WARNING

Indicates a hazardous situation which, if not avoided, **COULD** result in **DEATH** or **SERIOUS INJURY.**

CAUTION

Indicates a hazardous situation which, if not avoided, **COULD** result in **MINOR** or **MODERATE INJURY.**

NOTICE

Addresses practices not related to personal injury.

Potential hazards associated with the operation of this equipment will be referenced with hazard symbols which may appear throughout this manual in conjunction with safety messages.

Symbol	Safety Hazard
	Lethal exhaust gas hazards
	Explosive fuel hazards
	Burn hazards
	Rotating parts hazards
	Hydraulic fluid hazards

GENERAL SAFETY

CAUTION

- **NEVER** operate this equipment without proper protective clothing, shatterproof glasses, respiratory protection, hearing protection, steel-toed boots and other protective devices required by the job or city and state regulations.



- Avoid wearing jewelry or loose fitting clothes that may snag on the controls or moving parts, as this can cause serious injury.
- **NEVER** operate this equipment when not feeling well due to fatigue, illness, or when using medication.



- **NEVER** operate this equipment under the influence of drugs or alcohol.



- **ALWAYS** clear the work area of any debris, tools, etc. that would constitute a hazard while the equipment is in operation.
- No one other than the operator is to be in the working area when the equipment is in operation.
- **DO NOT** use the equipment for any purpose other than its intended purposes or applications.

NOTICE

- This equipment should only be operated by trained and qualified personnel 18 years of age and older.
- Whenever necessary, replace nameplate, operation and safety decals when they become difficult read.
- Manufacturer does not assume responsibility for any accident due to equipment modifications. Unauthorized equipment modification will void all warranties.
- **NEVER** use accessories or attachments that are not recommended by Multiquip for this equipment. Damage to the equipment and/or injury to the user may result.
- **ALWAYS** know the location of the nearest **fire extinguisher.**



- **ALWAYS** know the location of the nearest **first aid kit.**



- **ALWAYS** know the location of the nearest phone or **keep a phone on the job site.** Also, know the phone numbers of the nearest **ambulance, doctor** and **fire department.** This information will be invaluable in the case of an emergency.

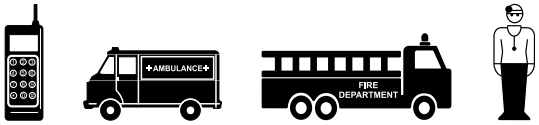

POWER BUGGY SAFETY

⚠ DANGER

- Engine fuel exhaust gases contain poisonous carbon monoxide. This gas is colorless and odorless, and **can cause death if inhaled**.
- Operate equipment only in areas with adequate ventilation. **NEVER** operate in ***confined areas***, or in areas where the free flow of air is restricted.

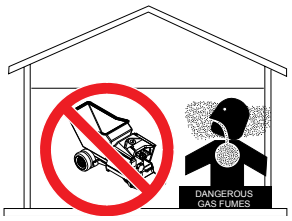

- **NEVER** operate the equipment in an explosive atmosphere or near combustible materials. An explosion or fire could result, causing **severe bodily harm or even death.**



⚠ WARNING

- **NEVER** use your hand to find hydraulic leaks. Use a piece of wood or cardboard. Hydraulic fluid injected into the skin must be treated by a knowledgeable physician immediately or **severe injury or death can occur**.



- Accidental starting can cause **severe injury or death**. **ALWAYS** place the ON/OFF switch in the OFF position.



- **NEVER** disconnect any **emergency or safety devices.** These devices are intended for operator safety. Disconnection of these devices can cause **severe injury, bodily harm or even death**. Disconnection of any of these devices will void all warranties.
- **NEVER** approach power lines with any part of the buggy unless all local, state/provincial and federal (OSHA) required safety precautions have been taken. **Use extreme caution** when approaching high voltage power lines.

⚠ CAUTION

- **ALWAYS** inspect the surface over which you will travel. Look for holes, drop-offs, and obstacles. Look for rough and weak spots on docks, ramps or floor. Look for oil spills, wet spots, and slippery surfaces. Look for soft soil, deep mud, and standing water. Watch for anything that might make you lose control or cause the power buggy to tip over.
- **ALWAYS** clear away trash and debris. Pick up anything that might puncture the tires.
- **ALWAYS** make sure aisles, ramps, doorways and passages are clear.
- **ALWAYS** plan your work. Make sure you know where you will make your pickups, dumps and turns. Before you take a load, know where you will place it.
- **NEVER** operate the power buggy facing backwards. In a backwards position, the operator cannot properly grip the handles, steer the machine, or activate the manual brake or emergency switch. **ALWAYS** face in the direction of the bucket.

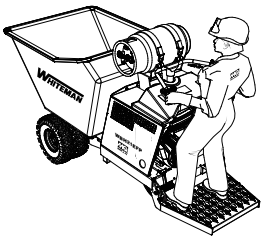

- **DO NOT** operate the power buggy on unsafe haul roads, load areas, or dump areas.
- **DO NOT** operate the power buggy on excessive slopes with a grade higher than 10% (6°), forward and backward.
- **DO NOT** operate the power buggy on extremely uneven surfaces.
- **NEVER** allow riders other than the operator on the power buggy.
- **ALWAYS** secure the step plate (platform) in the upright position when using the power buggy over rough terrain.
- **DO NOT** stand on the power buggy step plate (platform) when walking in rough terrain. Walk behind the power buggy.
- **DO NOT** touch, lean on, or reach through the dump mechanism or permit others to do so. **NEVER** climb on the power buggy or dump mechanism.

- **DO NOT** operate the power buggy at excessive speeds. Reckless operation may cause accidents and severe injury. Slow down when approaching people, wet areas, and going up and down grades. It is the responsibility of the operator to adjust speed, as necessary, depending on the conditions of the road or path.
- **ALLOW** extra time to stop when operating the power buggy on wet surfaces or loosely graded materials.
- **DO NOT** dump materials that are large and chunky. These types of material may shift, causing the power buggy to tip and throw the operator off the machine. The power buggy is intended for dumping free-flowing and loose materials such as dry soil, slag, and wet concrete.
- **DO NOT** dump materials from the bucket while the power buggy is moving.
- For walk-behind operation, the operator platform must be stowed and locked in the up position. The speed should also be reduced to 3 mph (4.8 kph) or slower.

NOTICE

- **ALWAYS** ensure the power buggy is **securely** placed on appropriate blocks or jackstands when maintenance requires elevation of the buggy.
- **ALWAYS** make sure the power buggy's brakes are working properly. Check the brake linkage and adjust as required. **NEVER** operate the power buggy with a defective braking system.
- Ensure brakes are applied when using on a slope.
- When parking on a slope, position the power buggy at a right angle to a slope. Ensure that the parking brake is engaged and holds the power buggy safely in place when parking on a slope.
- When filling or dumping, **DO NOT** exceed the payload capacity of the power buggy.
- **ALWAYS** be aware of traveling conditions. Reduce load if necessary.
- **DO NOT** activate the dump mechanism (tub) if the buggy is facing a downhill slope.
- **DO NOT** stand in front of or along side the buggy when discharging a load.
- **ALWAYS** block the power buggy with appropriate blocks when leaving the power buggy parked on a slope.
- To prevent unexpected loss of control, **DO NOT** start the engine on a sloping surface.
- Ensure that the speed control lever works freely and returns to the closed position. **DO NOT** start the engine unless the speed control linkage is working properly.
- Make sure the tires are inflated to the manufacturer's recommended tire pressure.
- **NEVER** operate the power buggy with bad or worn tires. **ALWAYS** replace defective tires with new ones.
- **ALWAYS** make sure the hydraulic dumping mechanism of the tub is working properly.
- Avoid sudden stops and starts and changes in direction. Operate the controls smoothly. **DO NOT** jerk the steering or any other controls.
- **NEVER** attempt to work the controls except from the operator's position.
- **NEVER** drive or tow the power buggy in traffic or on public roads.
- **ALWAYS** keep the machine in proper running condition.
- Fix damage to the machine and replace any broken parts immediately.
- The entire power buggy (tub, step plate, shroud, wheels, etc.) should be cleaned after every use. Make sure there is no buildup of concrete, grease, oil, or debris on the machine.
- **ALWAYS** store equipment properly when it is not being used. Equipment should be stored in a clean, dry location out of the reach of children and unauthorized personnel.
- **ALWAYS** place the fuel valve lever in the **OFF** position when the equipment is not in use.

ENGINE SAFETY

⚠ WARNING

- **DO NOT** place hands or fingers inside the engine compartment when the engine is running.



- **NEVER** operate the engine with heat shields or guards removed.
- Keep fingers, hands, hair, and clothing away from all moving parts to prevent injury.



- **ALWAYS** shut down the engine before performing service or maintenance.
- **DO NOT** remove the engine oil drain plug while the engine is hot. Hot oil will gush out of the oil tank and **severely scald** any persons in the general area of the power buggy.

⚠ CAUTION

- **NEVER** touch the hot exhaust manifold, muffler or cylinder. Allow these parts to cool before servicing the equipment.



- Make certain the operator knows how to and is capable of turning the engine OFF in case of an emergency.

NOTICE

- **NEVER** run the engine without an air filter or with a dirty air filter. Severe engine damage may occur. Service the air filter frequently to prevent engine malfunction.
- **NEVER** tamper with the factory settings of the engine or engine governor. Damage to the engine or equipment can result if operating in speed ranges above the maximum allowable.



FUEL SAFETY (LPG/PROPANE)

⚠ DANGER

- **ALWAYS** use extreme caution when handling propane. Propane is ***flammable and explosive*** and can cause ***serious personal injury or death*** if not handled properly.
- **DO NOT** fill propane tank within 25 feet (7.62 meters) of buildings and adjoining structures that may be a source of ignition.
- Remove all combustible materials including dry grass and leaves within 25 feet (7.62 meters) of the LPG dispenser.
- Before filling, visually inspect the propane tank for dents, cracks, and excessive corrosion. **NEVER** fill the propane tank if it is damaged, corroded, displays leaks at fittings\valves, or contains foreign material.
- **NEVER** fill the propane tank if the pressure relief or fill valves are damaged.
- **ALWAYS** fill the propane tank **outdoors** in a well-ventilated area, away from sparks and open flames. LP gas is odorless and invisible.
- **DO NOT** fill the propane tank while the engine is running or hot.
- **DO NOT** smoke around or near the equipment. **Fire or explosion** could result from gas vapors.



- Accumulation of LP gas vapors may result in the development of an oxygen-deficient atmosphere which carries a risk of **asphyxiation**.
- **NEVER** enter a gas cloud area. This condition produces an oxygen-deficient atmosphere that could be **fatal**.
- LPG/propane storage locations should be equipped with at least one approved portable fire extinguisher that has a minimum capacity of 18 lb. dry chemical with a B:C rating. **DO NOT** use carbon-tetrachloride extinguishers such as pyrene.
- **NEVER** check for leaks using an open flame.

⚠ CAUTION

- **NEVER** use propane tanks that are filled beyond 80% capacity.
- The propane tank must be filled by a trained propane filling station attendant or someone who has been officially trained by a propane fuel provider.
- **ALWAYS** use protective gloves when handling the propane tank. LP gas will cause cold burns if it comes into contact with the skin.
- The eyes and body must be protected when handling all LP gas products. **ALWAYS** wear protective eye safety glasses and clothing.
- LP gas is heavier than air. An underground or low level leak might not be detected immediately.

NOTICE

- Only use propane when operating this equipment. **NEVER** use any other type of fuel including diesel or methanol as serious damage to the engine will occur.
- Consult the National Fire Protection Association (NFPA) handbook for the handling, storing, transporting and useage of propane fuel.

BATTERY SAFETY

⚠ DANGER

- **DO NOT** drop the battery. There is a possibility that the battery will explode.
- **DO NOT** expose the battery to open flames, sparks, cigarettes, etc. The battery contains combustible gases and liquids. If these gases and liquids come into contact with a flame or spark, an explosion could occur.



⚠ WARNING

- **ALWAYS** wear safety glasses when handling the battery to avoid eye irritation. The battery contains acids that can cause **injury to the eyes and skin**.



- Use well-insulated gloves when picking up the battery.
- **ALWAYS** keep the battery charged. If the battery is not charged, combustible gas will build up.
- **DO NOT** charge the battery if frozen. The battery can **explode**. When frozen, warm the battery to at least 61°F (16°C).
- **ALWAYS** recharge the battery in a well-ventilated environment to avoid the risk of a dangerous concentration of combustible gases.
- If the battery liquid (dilute sulfuric acid) comes into contact with **clothing or skin**, rinse skin or clothing immediately with plenty of water.

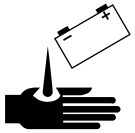

- If the battery liquid (dilute sulfuric acid) comes into contact with **eyes**, rinse eyes immediately with plenty of water and contact the nearest doctor or hospital to seek medical attention.

⚠ CAUTION

- **ALWAYS** disconnect the **NEGATIVE** battery terminal before performing service on the equipment.
- **ALWAYS** keep battery cables in good working condition. Repair or replace all worn cables.

LIFTING SAFETY

⚠ CAUTION

- **NEVER** allow any person or animal to stand underneath the equipment while lifting.

NOTICE

- When lifting of the power buggy is required, use a properly rated forklift. Forklift pockets are provided on the power buggy's frame. Make sure the forklift arms are insert into the power buggy's forklift pockets a minimum of 24 inches. Before lifting, make sure that the lifting bail is not damaged.
- **NEVER** tip the engine to extreme angles during lifting as this may cause oil to gravitate into the cylinder head, making it difficult to start the engine.
- **DO NOT** lift the machine to unnecessary heights.
- **NEVER** lift the equipment while the engine is running.
- **ALWAYS** use ramps capable of supporting the weight of the power buggy **and** the operator to load and unload the power buggy.

TRANSPORTING SAFETY

NOTICE

- **ALWAYS** shut down the engine before transporting.
- **ALWAYS** place the propane tank shut-off valve in the **OFF** position.
- When transporting of the power buggy is required, place the power buggy on a flatbed truck or equivalent and tie down securely.
- **ALWAYS** make sure all tie-downs and blocks are in place, and the bucket is completely lowered in the flat (horizontal) position and securely latched.
- Place chock blocks underneath the wheels to prevent rolling.
- When transporting the power buggy on a truck or trailer, know the overall height to avoid contacting overhead obstructions such as bridges and power lines. Check the truck and ramp capacities.

ENVIRONMENTAL SAFETY/DECOMMISSIONING

NOTICE

Decommissioning is a controlled process used to safely retire a piece of equipment that is no longer serviceable. If the equipment poses an unacceptable and unrepairable safety risk due to wear or damage or is no longer cost effective to maintain (beyond life-cycle reliability) and is to be decommissioned (demolition and dismantlement), be sure to follow the rules below.

- **DO NOT** pour waste or oil directly onto the ground, down a drain or into any water source.
- Contact your country's Department of Public Works or recycling agency in your area and arrange for proper disposal of any electrical components, waste, or oil associated with this equipment.



- When the life cycle of this equipment is over, remove the battery (if equipped) and bring it to an appropriate facility for lead reclamation. Use safety precautions when handling batteries that contain sulfuric acid.
- When the life cycle of this equipment is over, it is recommended that the unit frame and all other metal parts be sent to a recycling center.

  Metal recycling involves the collection of metal from discarded products and its transformation into raw materials to use in manufacturing a new product.

  Recyclers and manufacturers alike promote the process of recycling metal. Using a metal recycling center promotes energy cost savings.

EMISSIONS INFORMATION

NOTICE

Emission Control Label

The emission control label is an integral part of the emission system and is strictly controlled by regulation(s).

The label must remain with the engine for its entire life.

If a replacement emission label is needed, please contact your authorized engine distributor.

WORK SAFELY!

WARNING



Failure to comply with these lifting instructions may result in **lifting equipment failure** and **severe personal injury or death**.

Only **qualified personnel** with proper training should perform this procedure. Follow all rigging and lifting safety rules when performing this procedure.

LIFTING SAFETY

CAUTION

- **NEVER** allow any person to stand underneath the equipment while lifting.
- Power buggies are very heavy and awkward to move around. **ALWAYS** use proper heavy-lifting procedures.
- **NEVER** lift the equipment with the operator on the machine.

NOTICE

- **ALWAYS** make sure any lifting device has been properly secured to the lift loops of the buggy.
- **DO NOT** lift the equipment to unnecessary heights.
- **ALWAYS** shut down the engine before transporting.
- Tighten the fuel tank cap securely and close the fuel cock to prevent fuel from spilling.

LIFTING EQUIPMENT INSPECTION

ALWAYS perform a thorough inspection of lifting chains, hooks, or slings **before each use**. All lifting equipment and procedures must comply with **Occupational Safety and Health Administration (OSHA) Regulation 29 CFR Part 1926.251**.

Chain Inspection

The Occupational Safety and Health Administration (OSHA) Regulation 29 CFR Part 1926.251 (b)(5) — *Removal from service* requires that steel chains used for lifting be inspected prior to each use, and **removed from service immediately** whenever wear at any point of any chain link exceeds that shown in Table A.

Table A. Maximum Allowable Wear at Any Point of Chain Link

Chain Size (Inches)	Maximum Allowable Wear (Inch)
1/4	3/64
3/8	5/64
1/2	7/64
5/8	9/64
3/4	5/32
7/8	11/64
1	3/16
1 1/8	7/32
1 1/4	1/4
1 3/8	9/32
1 1/2	5/16
1 3/4	11/32

WARNING

ALWAYS check Rated Capacity tags on lifting chains before use. **DO NOT** use chains with missing or illegible Rated Capacity tags. **ALWAYS** make sure the rated capacity of the lifting equipment is sufficient for the load being lifted.

Sling Inspection

The Occupational Safety and Health Administration (OSHA) Regulation 29 CFR Part 1926.251 (e)(8) — *Removal from service* requires that lifting slings be inspected prior to each use, and **removed from service immediately** if any of the conditions listed in Table B are found.

Table B. Conditions for Removal of Lifting Slings from Service	
■ Holes, tears, cuts, or snags ■ Embedded particles ■ Abrasive wear that exposes core fibers	
■ Missing or unreadable Rated Capacity tags ■ Melting, charring, weld spatter, or chemical burns	
■ Broken or worn stitching that exposes the core fibers	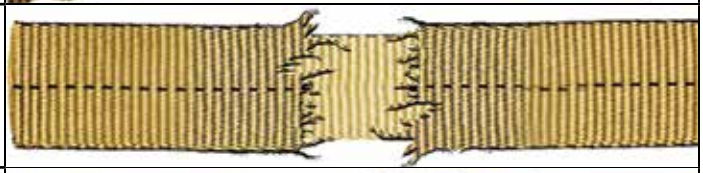
■ Knots	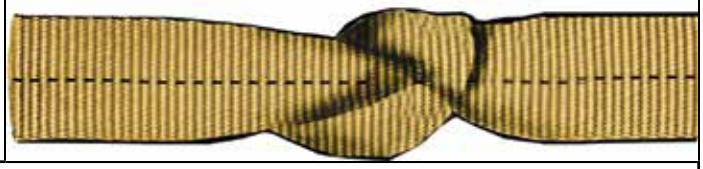
■ Any other condition which may cause doubt as to the strength of the sling	

LIFTING PROCEDURE

Use the correct lifting slings or chains for the weight of your buggy in accordance with Occupational Safety and Health Administration (OSHA) Regulation 29 CFR Part 1926.251 — *Rigging equipment for material handling*.

⚠ WARNING

ALWAYS inspect the lifting equipment (slings, chains, etc.) **before each use**.

NOTICE

MAKE SURE the lifting device has adequate lifting capacity to lift the buggy.

1. Make sure the tub is completely empty. **DO NOT** lift while the tub is loaded.
2. Raise the tub as shown in Figure A.
3. Turn the engine **OFF**.
4. Place the foot plate in the **down** position.
5. Attach three lifting chains or nylon slings to the three lifting points shown in Figure A. Make sure the chains or slings are rated for a minimum load capacity of 2,600 pounds (1,180 kg).
6. Adjust slack in the chains or straps so that the buggy will remain level when lifted.
7. Lift the buggy using an appropriate crane or equivalent lifting device capable of lifting a minimum of 2,600 pounds (1,180 kg).

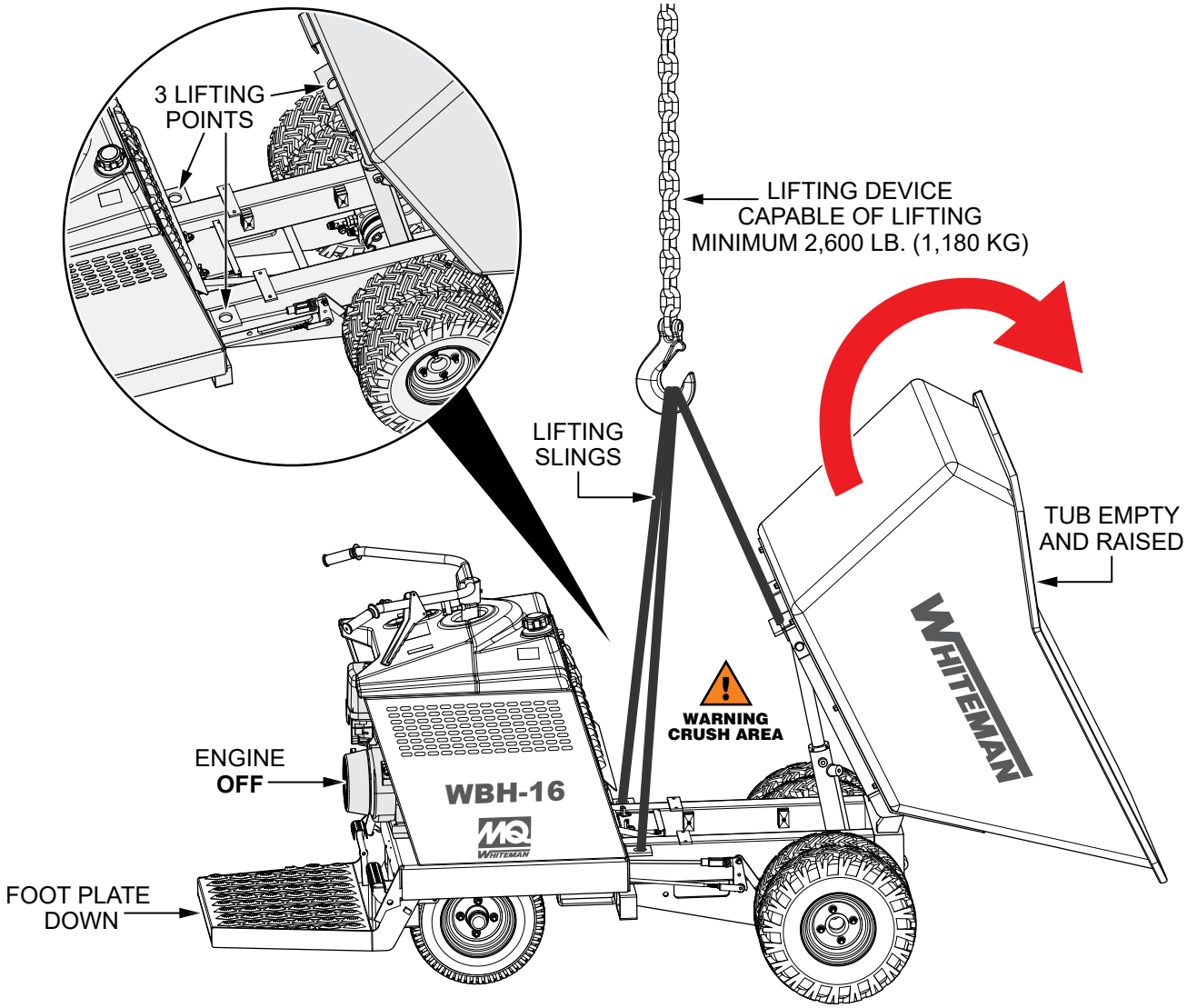

Figure A. Lifting Procedure

Table 1. Specifications (Power Buggy)	
Model	WBH-21EFP
Maximum Weight Capacity (Dual Wheels)	3,200 lbs. (1,451 kg)
Operating Weight	1,492 lbs. (677 kg.)
Bucket/Tub Capacity	21 cu. ft. Water Level (.78 cu. yd.)
Bucket/Tub Material	Polyethylene
Drive	Hydrostatic
Speed	Up to 7.25 mph. (11.67 km/h)
Steering	Handle Bars To Rear Wheels
Propane Vapor Tank Capacity	33.5 lbs. (15.2 kg/36.3 liters) Fill to 80% Capacity 26.8 lbs. (12.1 kg/29.04 liters)
Hydraulic Oil Tank Capacity	5.3 gallons (20.4 liters)
Hydraulic Oil Type[1]	Exxon/Mobil Nuto H 46 or Equivalent
Hydraulic Oil Type[2]	Hydro-Gear Transmission 15W-40
Hydraulic Filter	200 Micron Mesh
Brakes (Drive Wheels)	Dynamic Hydrostatic
Parking Brake (Drive Wheels)	Mechanical
Dump Control	Hydraulic Dump and Return
Discharge Height	6.0 in. (152 mm)
Ground Clearance	6.0 in. (152 mm)
Gradeability	6°
Battery (LxWxH)	12V BCI Group U1, 300 CCA @ 0°F 7.75 x 5.18 x 7.31 in. (197 x 132 x 186 mm)
Foam Filled Tires (Drive Wheels)	5.70 x 8.0 (145 x 203 x 483 mm)
Foam Filled Tires (Steering)	4.80 x 8.0 in. (122 x 203 mm)

[1] Used with **EATON** transmission only. Reference associated parts manual to order specified oil type.

[2] Used with **HYDRO-GEAR** transmission only. Reference associated parts manual to order specified oil type.

Table 2. Specifications (Engine)	
Model	Briggs and Stratton Vanguard
Type	Twin Cylinder, Overhead Valve, Air Cooled
Bore X Stroke	2.82 x 2.75 in. (71.88 x 69.85 mm)
Displacement	34.7 cu. in. (570 cc)
Maximum Power	18.0 hp (3,600 rpm)
Maximum Torque	31.70 ft-lbs. (2,800 rpm) 14.37 kgf-m (2,800 rpm)
Idle Speed	1,400 ± rpm
Maximum No Load RPM	3600 ± 100 rpm
Specific Fuel Consumption	1.64 gals./hr. (6.05 liters/hr.)
Fuel Type	HD-5 or HD-10 Liquid Propane
Oil Type	API Service Class SF, SG, SH, SJ or Higher
Oil Filter	Spin-On
Crankcase Oil Capacity	1.8 quarts (1.7 Liters)
Starting System	Recoil/Electric
Spark Plug Gap	0.028 - 0.031 in. (0.70 - 0.76 mm)
Air Cleaner	Dual Element
Dry Weight	74.0 lbs. (33.56 kg.)
Outside Dimensions L X W X H	17.40 x 10.60 x 18.14 in. (439 x 406 x 344 mm)

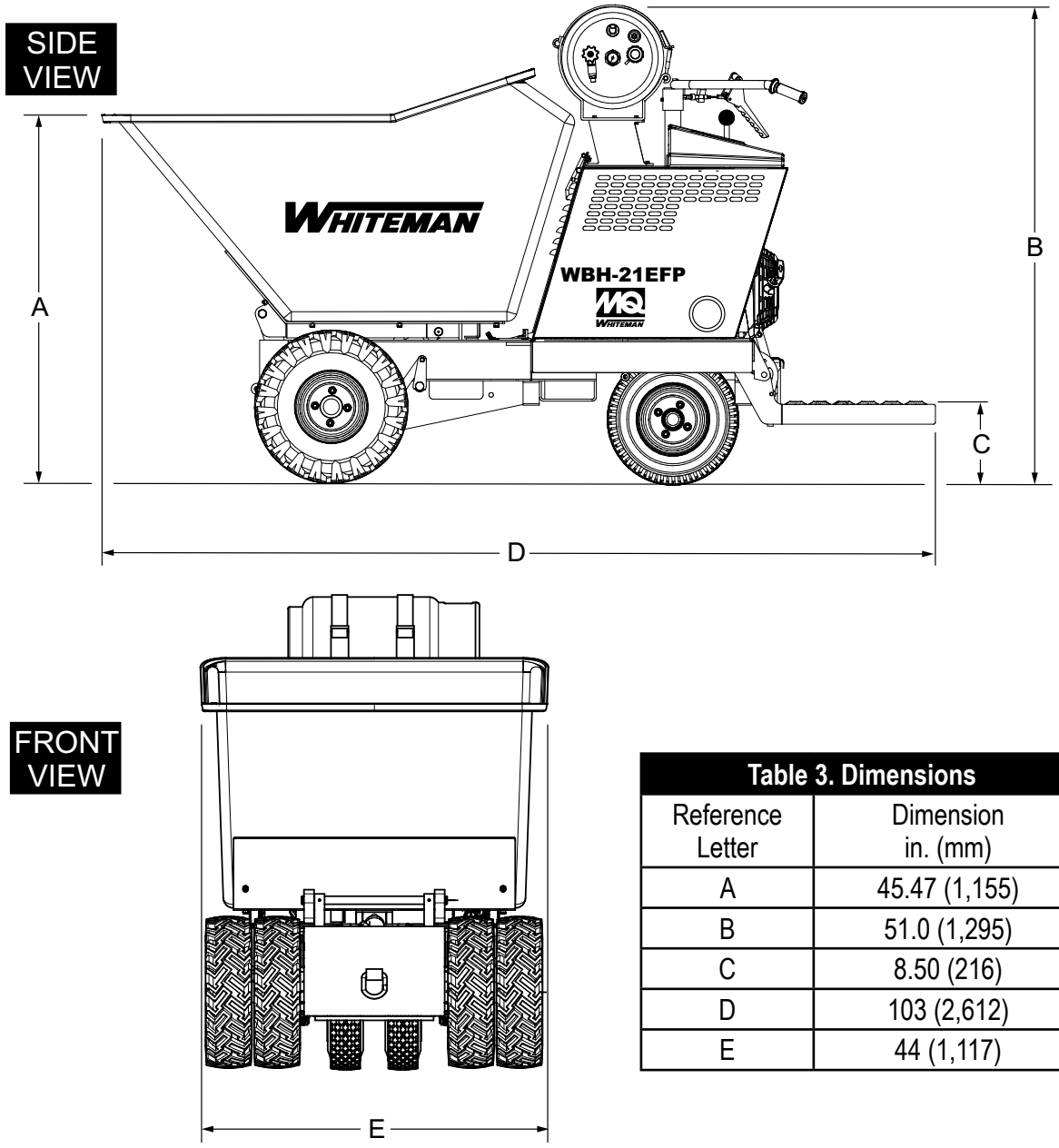

Table 3. Dimensions	
Reference Letter	Dimension in. (mm)
A	45.47 (1,155)
B	51.0 (1,295)
C	8.50 (216)
D	103 (2,612)
E	44 (1,117)

Figure 1. WBH21-EFP Dimensions

The MQ Whiteman Power Buggy, Model WBH-21EFP (recoil/electric start) is intended for the transportation of concrete, concrete spreading and spot pouring. In addition, this power buggy is designed for landscaping applications, material sub-base distribution, job site cleanup and material transport.

The Power Buggy is equipped with a 6-inch dump height which provides clearance and enables the operator to maneuver over any form height. In addition, it has a unique polyethylene tub design that reduces concrete splatter.

A low center of gravity has been incorporated into the design which provides added safety when maneuvering the buggy in tight areas. A 7.5 gallon (28.3 liters) propane fuel tank allows for extended uninterrupted use. Maximum speed of the power buggy is rated at 7.25 mph (11.7 km/h).

The maximum weight capacity of the Power Buggy is 3,200 lbs. (1,451 kg).

Hand and foot controls are provided for ease of dumping and stopping of the power buggy. Multiple lift points have been provided to allow for easy access of a forklift when lifting is required.

The WBH-21EFP is powered by a Briggs and Stratton Vanguard twin cylinder, air cooled engine rated at 18 HP at 3600 RPM.

This engine has been designed to use a special ***vapor*** propane tank that is specifically designed for vapor run small engine applications.

The engine drives a variable displacement hydrostatic transmission which is activated by a cable controlled hand lever. The hydraulic fluid flows to a divider valve which directs the fluid to the forward reverse and dumping systems.

The operator controls the forward and reverse machine travel by manually shifting the control valve which directs the hydraulic fluid flow to the two drive wheel motors. The flow to the dump cylinder is also controlled by a manually operated control valve.

This hydraulic system uses a parallel loop configuration, operating at a maximum of 2100 PSI (14,478 kPa). The system also features a neutral position which allows the power buggy to be moved in the event of an emergency.

The hydraulic oil is filtered by a screen type filter located in the hydraulic tank, then doubled filtered within the system by a 10 micron cartridge spin-on return filter.

⚠ WARNING

All operators must have training before operating the power buggy. For your safety, warnings are on the machine and in this manual. Failure to obey these warnings can cause severe injury or even death.

⚠ CAUTION



DO NOT attempt to operate the power buggy until the Safety Information, General Information, and Inspection sections of this manual have been ***read and thoroughly understood.***

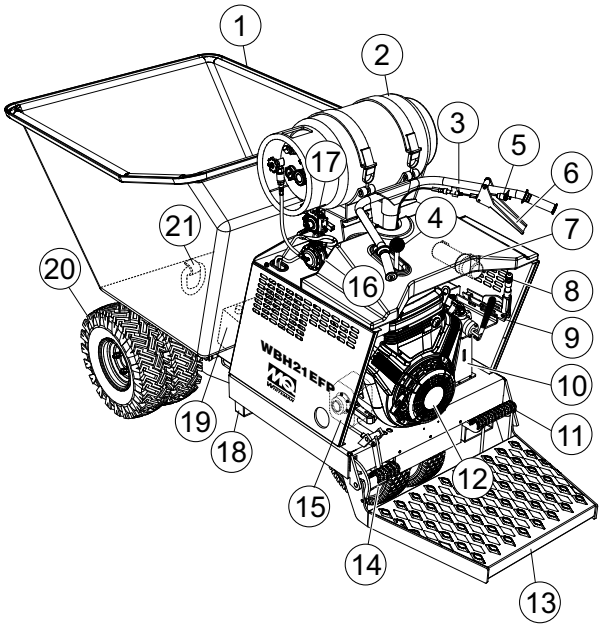

Figure 2. WBH21-EF Power Buggy Components

1. **Tub or Bucket** — Used for the transportation of material. Tub holds approximately 21 cubic feet (0.59 cubic yards) of water.
2. **Propane Tank (Horizontal Vapor)** — Holds 33.5 lbs (36.3 liters) of propane. Used to fuel engine instead of gasoline.Uses either HD-5 or HD-10 liquid propane. HD-5 is recommended.
3. **Handle Bar (Steering)** — This handle bar is used to steer the buggy. When driving the buggy, use both hands and hold onto both handle bar grips.
4. **Dump Control Lever** — Use this lever forward to place the tub in the dump position (vertical), move the lever backward to return the tub to travel position (horizontal)
5. **Kill Switch** — In the event of an emergency, press this button to stop the engine.
6. **Speed Control** — Sets the power buggy's travel speed. When fully depressed, the buggy will be at **FULL** speed. When released, the buggy will **STOP**.
7. **Documentation Canister** — Store and maintain Operation, Parts, and Engine manuals in this container at all times.
8. **Travel Lever** — When the travel lever is pushed forward, the buggy will travel in the forward direction. Placing the travel lever in the backward position will cause the buggy to travel in the reverse direction. Center position is neutral.
9. **Parking Brake Lever** — When this lever is activated (pulled up), the parking brake will be set. To release the brake, pull the lever downwards.
10. **Hydraulic Tank/Cap** — Remove this cap to add hydraulic oil. Tank holds approximately 5.3 U.S. gallons (20.4 liters). **DO NOT** over fill.
11. **Brake Pedal** — Press this pedal with the right foot to stop the buggy.
12. **Engine** — This machine uses an electric start Briggs & Stratton 18HP Vanguard engine.
13. **Operator Platform** — When the buggy is in use, the operator shall **ALWAYS** stand on this platform while holding onto the handle bar (steering).
14. **Dump Pedal** — Use this pedal to place the tub in the dump position (vertical). Press pedal a second time to return tub to the travel position (horizontal).
15. **Muffler** — Used to reduce noise and emissions. **NEVER** touch the muffler while it is hot. Serious burns can result.

⚠ CAUTION



Engine components can generate extreme heat. To prevent burns, **DO NOT** touch these areas while the engine is running or immediately after operating. **NEVER** operate the engine with the muffler removed.

16. **Vacuum Fuel Lock Valve** — Opens and closes the propane fuel circuit. Valve opens while engine is cranking (vacuum). Engine off valve closes, no vacuum.
17. **Propane Fuel Regulator** — Regulates gas pressure inside the propane tank.
18. **Forklift Pockets** — Use these fork lift pockets to lift the power buggy with a forklift. Remember to insert the forks of the fork lift a minimum of 24 inches (610 mm.) into power buggy's fork lift pockets.
19. **Battery** — Always use gloves and eye protection when handling the battery.
20. **Tires** — Foam filled tires. See Table 1 for tire size.
21. **Towing Hook** — Use this hook to tow the buggy if it gets stuck. This hook is **NOT** intended for towing the buggy on public roads at high speeds.

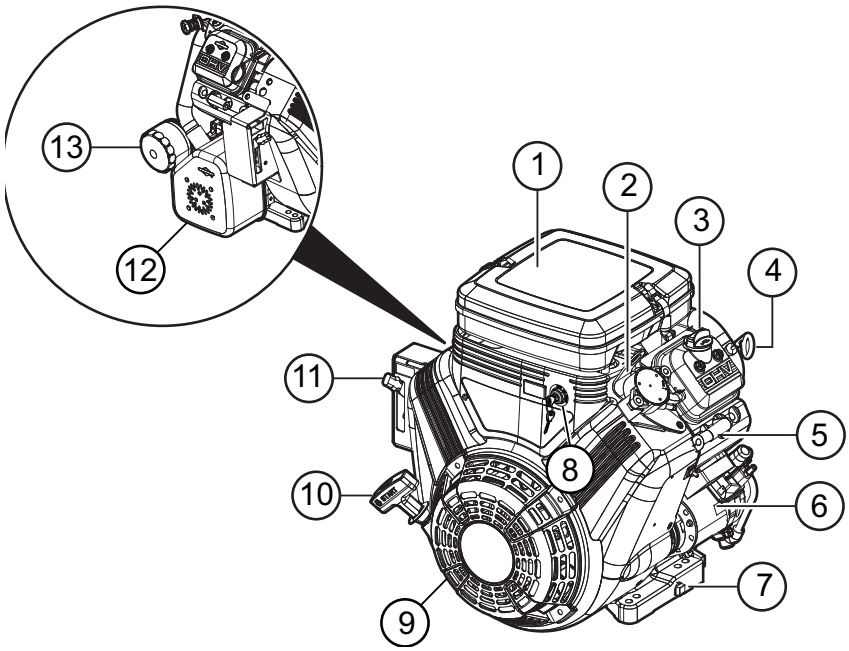

Figure 3. Briggs & Stratton Vanguard 18HP Engine

1. **Air Filter** — Prevents dirt and other debris from entering the fuel system. Release the latches on the sides of the air filter cover to gain access to filter element.

> ***NOTICE***
>
> Operating the engine without an air filter or with a damaged or worn air filter will allow dirt to enter the engine causing rapid engine wear.

2. **Lifting Hook** — Attach a rope or chain to this lifting point to lift engine.
3. **Oil Fill Cap** — Remove cap to refill or replace oil with recommended type as listed in Table 4. Make sure cap is tightened securely. **DO NOT** over fill.
4. **Oil Dipstick** — Remove to check amount and condition of oil in crankcase.
5. **Spark Plugs** — Provides spark to the ignition system. Set spark plug gap to 0.70- 0.76 mm (0.028 - 0.030 in.) Clean spark plug once a week.
6. **Electric Starter** — Starts engine when ignition key is rotated to the **ON** position. Oil Drain Plug — Remove to drain crankcase oil.
7. **Oil Drain Plug** — Remove to drain crankcase oil.
8. **Engine** — This machine uses an electric start Briggs & Stratton 18HP Vanguard engine. This engine runs only on LPG fuel (propane).
9. **Ignition Switch/Keys** — Insert the ignition key here to start the engine. Turn the key clockwise to the **ON** position then continue turning clockwise to the **START** position and release. To stop the engine, turn the key fully counterclockwise to the **STOP** position.
10. **Recoil Starter (pull rope)** — Manual-starting method. Pull the starter grip until resistance is felt, then pull briskly and smoothly.
11. **Throttle Lever** — Used to adjust engine RPM speed (lever advanced forward **SLOW**, lever back toward operator **FAST**).
12. **Muffler** — Used to reduce noise and emissions. **DO NOT** touch the muffler while the engine is running.
13. **Oil Filter** — Prevents dirt and other debris from entering the engine. Service the oil filter as recommended in the maintenance section of this manual.

BEFORE STARTING

1. Read safety information at the beginning of manual.
2. Clean the machine, removing dirt and dust, particularly the engine cooling air inlet, carburetor and air cleaner.
3. Check the air filter for dirt and dust. If air filter is dirty, replace air filter with a new one.
4. Check fastening nuts and bolts for tightness.

ENGINE OIL CHECK

1. To check the engine oil level, place the buggy on secure level ground with the engine stopped.
2. Remove the dipstick from its holder (Figure 4) and wipe it clean.

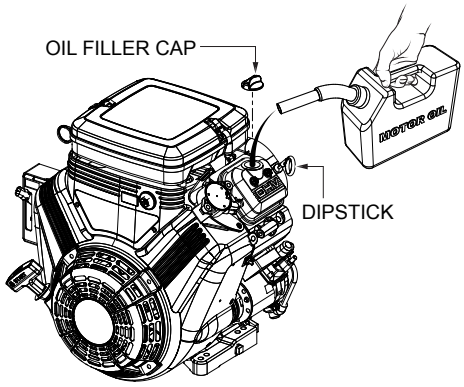

Figure 4. Engine Oil Dipstick Removal

3. Reinsert the dipstick back into its holder then remove. Check the oil level shown on the dipstick.
4. If the oil level is low, remove the oil fill cap (Figure 4) and fill the engine crankcase with lubricating oil through the oil filler hole, but **DO NOT** overfill.
5. Make sure the buggy is level and verify that the oil level is maintained between the two notches (Figure 5) as shown on the dipstick. Reference Table 4 for proper selection of engine oil.

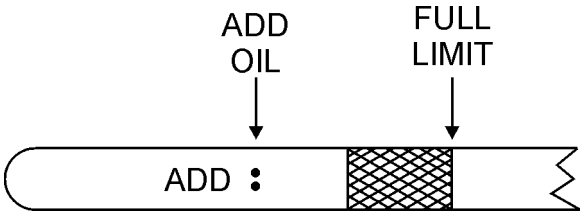

Figure 5. Engine Oil Level

6. When checking the engine oil, be sure to check if the oil is clean. If the oil is not clean, drain the oil by removing the oil drain plug, and refill with the specified amount of oil as outlined in the maintanence section of this manual. Oil should be warm before draining.

Table 4. Oil Type

Season	Temperature	Oil Type
Summer	25°C or Higher	SAE 10W-30
Spring/Fall	25°C~10°C	SAE 10W-30/20
Winter	0°C or Lower	SAE 10W-10

FUEL CHECK (LPG\PROPANE)

1. Turn the shutoff valve knob (Figure 6) clockwise to release propane gas.

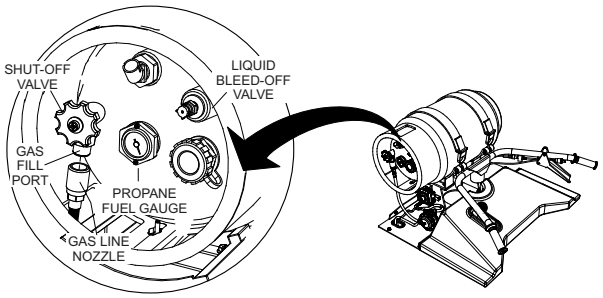

Figure 6. Propane Tank Shut-Off Valve

2. Read the ***propane fuel gauge*** (Figure 7) located on top of propane tank.

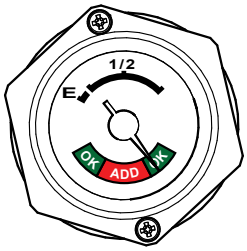

Figure 7. Propane Tank Fuel Gauge

3. If the propane fuel level is low, removal of the empty propane tank from the machine is necessary.

NOTICE

HD-5 Propane is the highest grade propane available. HD-10 Propane is a grade below HD-5 Propane. HD-5 Propane is recommended as HD-10 Propane may cause engine components to “gum,” or stick, during operation resulting in engine damage.

Procedure For Removing Propane Vapor Tank

1. Place machine on secure level ground where it will not slip or slide.
2. **CLOSE** shutoff valve (Figure 8) on propane tank.

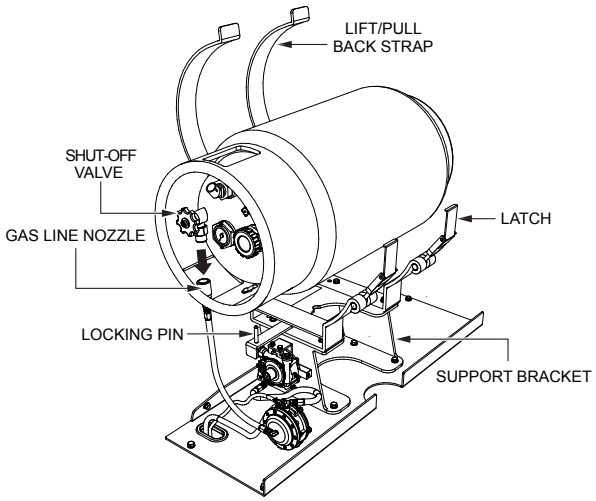

Figure 8. Propane Tank Removal

3. Unscrew the ***left-hand thread*** LPG gas line nozzle from propane tank fill port.
4. Secure LPG gas nozzle/hose to the propane connection port below the propane tank.
5. Release propane tank strap latches.
6. To remove propane tank, push backward and lift upward.
7. Align the propane tank locking slot with the locking pin on the tank support cradle and place new propane tank into the support cradle.
8. Secure propane tank using straps with locking latches.
9. Reconnect LPG gas line nozzle to propane tank fill port.
10. **OPEN** shutoff valve on propane tank.

NOTICE

This machine uses a special vapor withdrawal tank identified by a green-colored band and hose fitting with ACME left-hand threads.

DO NOT substitute for a liquid tank used on tow motor or forklift. Using a non-approved liquid tank will damage the propane system.

NOTICE

NEVER use propane tanks overfilled beyond 80%.

Overfilling the tank will cause liquid propane to enter the system, which may cause damage to the regulator and fuel lock valve.

BATTERY

This unit is of negative ground **DO NOT** connect in reverse. **ALWAYS** maintain battery fluid level between the specified marks. Battery life will be shortened, if the fluid level are not properly maintained. Add only distilled water when replenishment is necessary.

DO NOT over fill. Check to see whether the battery cables are loose. Poor contact may result in poor starting or malfunctions.

ALWAYS keep the terminals firmly tightened. Coating the terminals with an approved battery terminal treatment compound. Replace battery with only recommended type battery. The battery type used in this power buggy is BCI Group U1.

The battery is sufficiently charged if the specific gravity of the battery fluid is 1.28 (at 68° F). If the specific gravity should fall to 1.245 or lower, it indicates that the battery is dead and needs to be recharged or replaced.

Before charging the battery with an external electric source, be sure to disconnect the battery cables.

⚠ CAUTION

ALWAYS disconnect the negative terminal **FIRST** and reconnect negative terminal **LAST**.

Battery Cable Installation

ALWAYS be sure the battery cables (Figure 9) are properly connected to the battery terminals as shown below. The **red cable** is connected to the positive terminal of the battery, and the **black cable** is connected to the negative terminal of the battery.

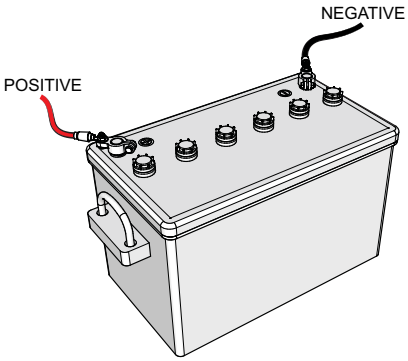

Figure 9. Battery Connections

When connecting battery do the following:

1. **NEVER** connect the battery cables to the battery terminals when the ignition is in the **ON** position (start).
2. Place a small amount of battery terminal treatment compound around both battery terminals. This will ensure a good connection and will help prevent corrosion around the battery terminals.

NOTICE

If the battery cable is connected incorrectly, electrical damage to the power buggy will occur. Pay close attention to the polarity of the battery when connecting the battery.

⚠ CAUTION

Inadequate battery connections may cause poor starting of the power buggy, and create other malfunctions.

TIRE AND WHEEL WEAR CHECK

The tires (Figure 10) used on this power buggy are foam filled and therefore do not have to be inflated. However the tires shoud be inspected for cuts, wear and deformity.

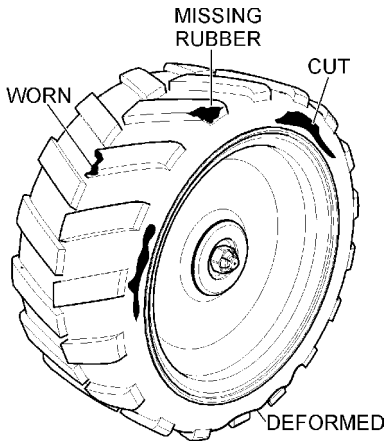

Figure 10. Tire/Wheel Inspection

The wheels and tires of the power buggy are very important for effective operation.

1. Check the tires regularly to make certain the lugs nuts are tight.
2. Check wheels for cracks.

PARKING BRAKE CHECK

Check the brakes as outlined in the maintenance section of this manual.

LINKAGE CHECK

Check and make sure that all linkages within the buggy are functioning correctly.

STEERING CHECK

1. Check and make sure that the power buggy's steering turns freely and that there is no binding.
2. Make sure that the zerk fitting for the steering has been lubricated.

DUMP CYLINDER CHECK

1. Check the power buggy's dump cylinder as outlined in the operation section of this manual.
2. Make sure that both zerk fittings for the dump cylinder have been lubricated.

HYDRAULIC OIL CHECK

3. Visually read the hydraulic sight glass (Figure 11) to see if the hydraulic oil level is low.
4. If the hydraulic oil is low, add enough hydraulic oil to bring oil level to a normal safe operating level as referenced in Table 1.

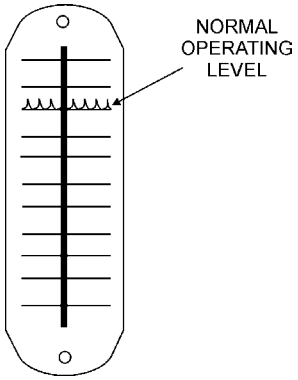

Figure 11. Hydraulic Sight Glass

CAUTION

DO NOT attempt to operate the power buggy until the Safety Information, General Information, and Inspection sections of this manual have been ***read and thoroughly understood.***

ELECTRIC START (METHOD)

1. Before attempting to start the power buggy, make sure that the ***safety kill switch*** (Figure 12) is not pushed in. The power buggy will not start with the kill switch engaged.

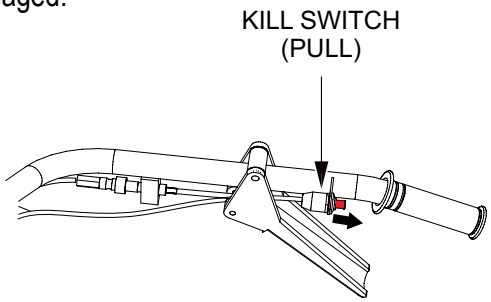

Figure 12. Kill Switch OFF

2. Place the travel control lever (Figure 13) in the **NEUTRAL** position.

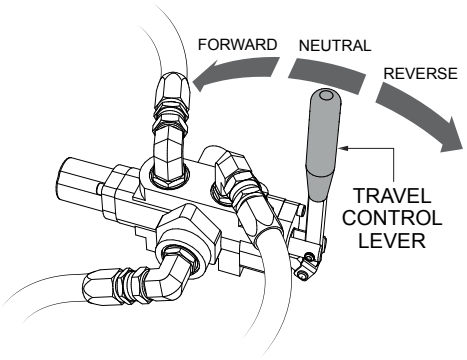

Figure 13. Travel Control Lever

3. Slowly **OPEN** the fuel shutoff valve (Figure 14) on the propane tank.

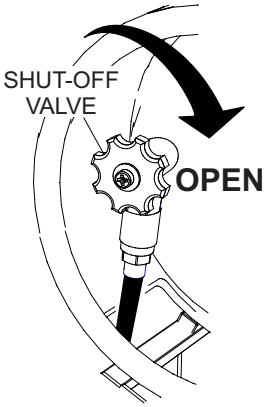

Figure 14. Fuel Shutoff Valve (OPEN)

4. Move the throttle lever halfway between the **FAST** and **SLOW** position (Figure 15) for starting.

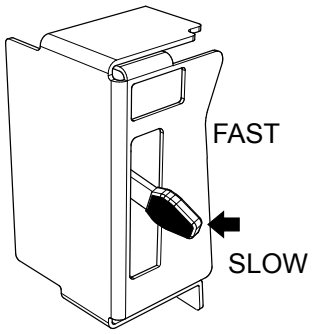

Figure 15. Throttle Lever (Midway Position)

5. Press the primer button (Figure 16) on the vacuum valve once. Pressing the button will allow pressure to build up at the regulator (3.5~4.0 psi/ 24~ 27 kPa)

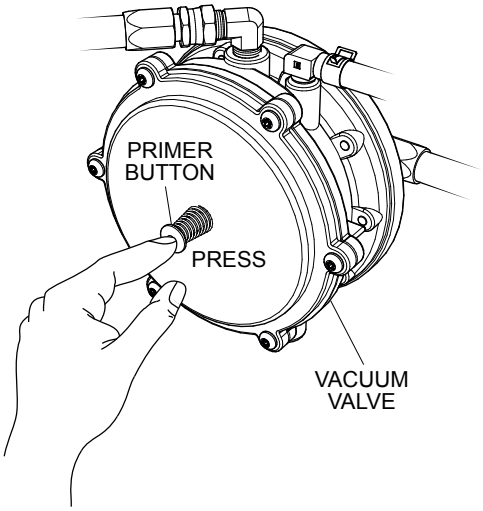

Figure 16. Primer Button

6. Place the ignition key (Figure 17) in the **START** position and hold it until the engine starts. When the engine starts, release the key, allowing it to return back to the **ON** position.

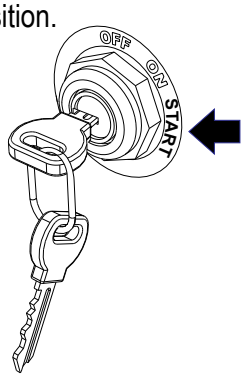

Figure 17. Engine Switch (Start Position)

7. Before the buggy is placed into operation, run the engine for several minutes. Check for fuel leaks, and noises that would associate with a loose guard or cover.

RECOIL START (METHOD)

1. Follow steps 1 through 5 of the Electric Start procedure.
2. Grasp the starter grip (Figure 18) and slowly pull it out. The resistance becomes the hardest at a certain position, corresponding to the compression point. Pull the starter grip briskly and smoothly for starting.

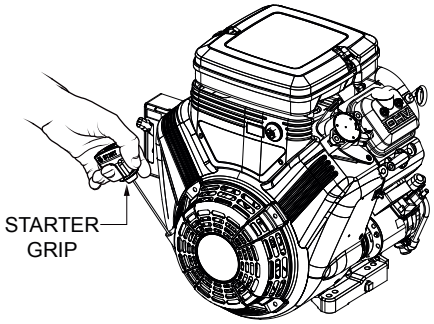

Figure 18. Starter Grip

NOTICE

DO NOT pull the starter rope all the way to the end. **DO NOT** release the starter rope after pulling. Allow it to rewind as soon as possible.

3. After the engine has started and warmed, ***slowly*** pull the choke lever outward to the **OPEN** position.
4. If the engine has not started, repeat steps 1 through 3.

PRE-CHECK

1. Engage the parking brake lever (Figure 19) and attempt to rock the buggy back and forth. If the wheels turn during the rocking motion, adjust the brakes as outlined in the maintenance section of this manual.

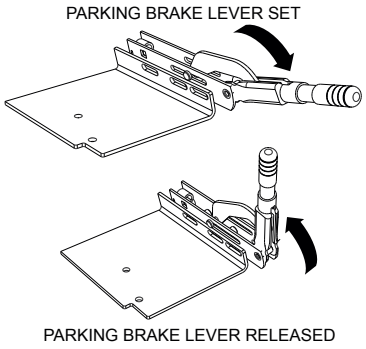

Figure 19. Parking Brake Lever

2. Place the engine's throttle lever (Figure 15) in the ***slow*** (idle) position.
3. Check the speed control lever (Figure 20) located on the right side of the handle bar. The speed control should work freely when squeezed by hand, and return to the ***neutral*** position when released.

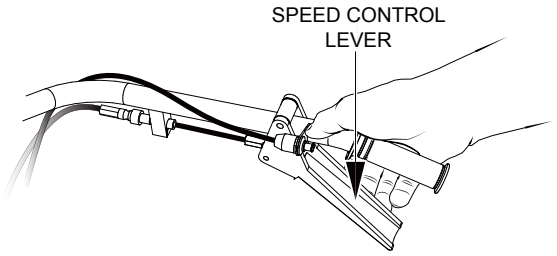

Figure 20. Speed Control Lever

PARKING BRAKE/DIRECTION LEVER

Before the power buggy can be put into operational use, it is best to perform a test run to make certain that all components are functioning properly.

1. Place the buggy on flat solid ground.
2. Engage the parking brake lever.
3. Place the engine's throttle control (Figure 15) in the **SLOW** (idle) position.
4. Place the power buggy's direction lever (Figure 21) in the forward direction.

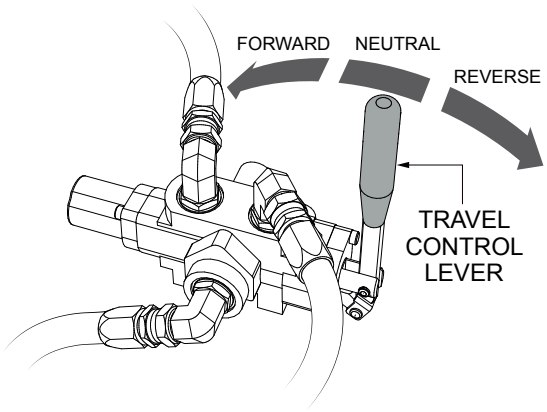

Figure 21. Direction Lever

5. Slowly squeeze the speed control lever slightly (Figure 20), for a short period of time to test the brake holding capacity. If the buggy moves forward, adjust the brakes as outlined in the maintenance section of this manual.
6. If the buggy does not move forward, release the speed control, and disengage the parking brake. If the buggy creeps forward or reverse while the parking brake is disengaged, the machine will require service adjustment of the pump control lever as outlined in the maintenance section of this manual.

TRAVELING

1. With the engine running and parking brake released, place the direction lever (Figure 21) in the forward direction.
2. Squeeze the speed control lever (Figure 20) slightly until the buggy begins to move in a forward direction. Initially, let the buggy travel at about 3 MPH.
3. When using the buggy for the first time, test the brake. With the right foot, step up and place it on the brake pedal (Figure 22). Gradually apply pressure to the brake pedal until the buggy comes to rest.

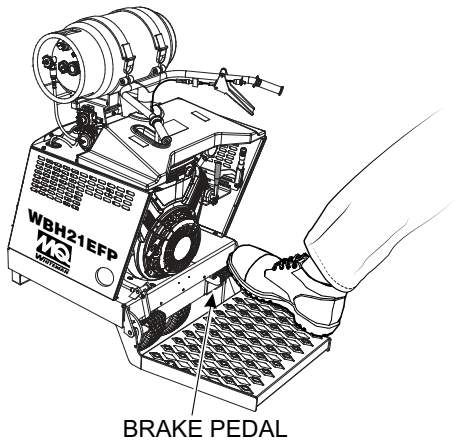

Figure 22. Brake Pedal

4. Test the brake at different speeds until you are comfortable with stopping the buggy. If the brakes do not seem to stop the buggy adequately, refer to the maintenance section of this manual for brake adjustment instructions.
5. When starting and stopping is confirmed to be functioning properly, the buggy is ready for operation.

STEERING

To steer the buggy, use the handle bar in front of the operator platform.

1. To turn left when traveling in the forward direction, turn the handle bar clockwise (Figure 23).

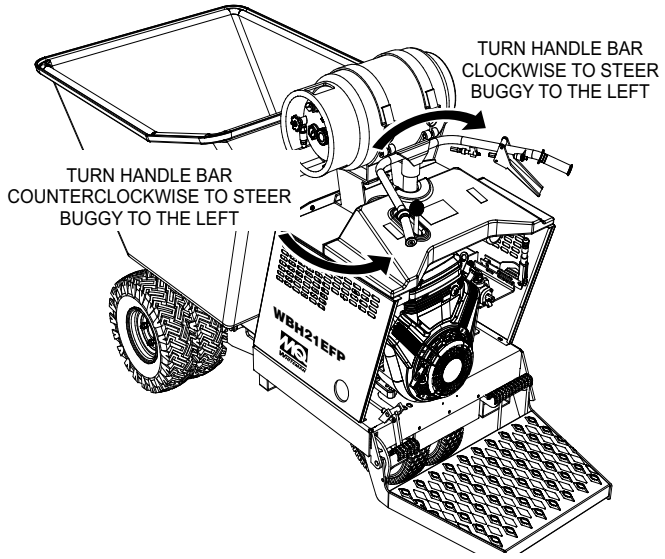

Figure 23. Steering the Buggy

2. To turn right when traveling in the forward direction, turn the handle bar in the counterclockwise direction.

⚠ CAUTION

DO NOT steer the buggy left or right when traveling up or down on a grade. Travel in a straight path.

⚠ CAUTION

Avoid sudden and quick turns. When steering, turn the handle bar slowly. Always face the controls when traveling.

TRAVELING ON A SLOPE

1. When traveling on a slope, it is necessary to determine the grade of the path. The buggy can travel up, down or side to side on a maximum grade of 10% (6°). **DO NOT** travel on steeper slopes.

   To determine the % grade of your path of travel, use the formula and graph in Figure 24.

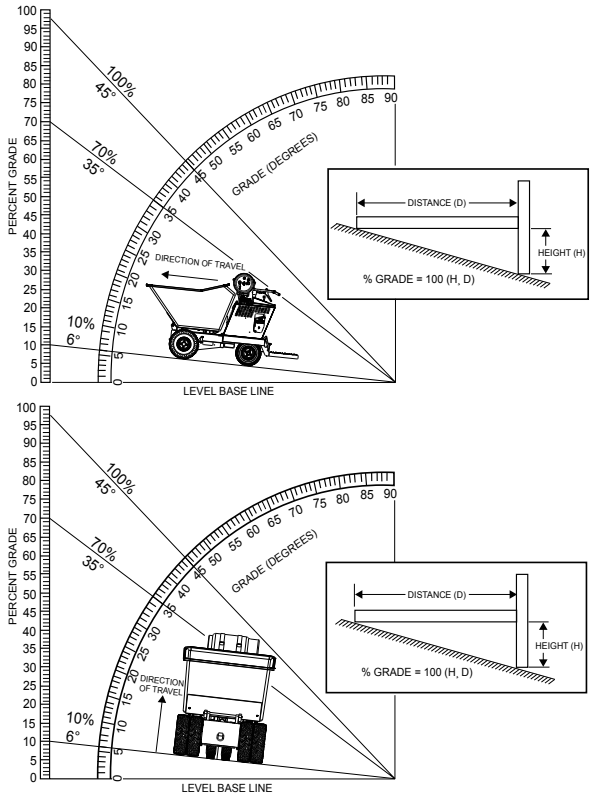

Figure 24. Determining Grade of Slope

NOTICE

When traveling on slopes with a loaded tub, ensure the tub is positioned on the ***uphill*** end of the buggy, and the operator is on the ***downhill*** end of the buggy (Figure 25).

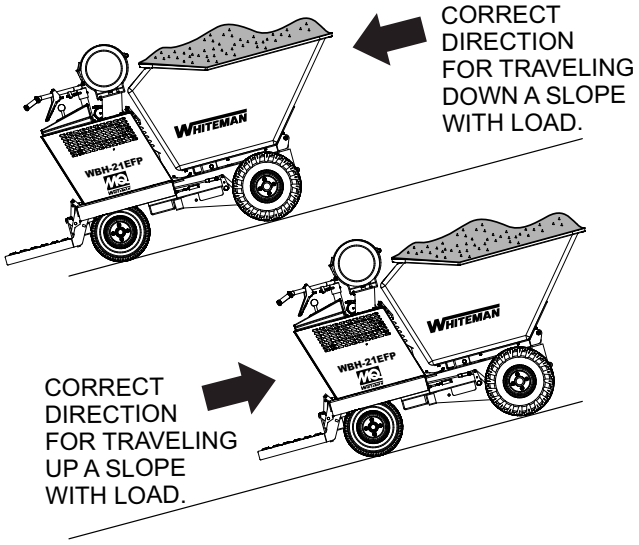

Figure 25. Slope Travel Direction

TUB (BUCKET) DUMPING

NOTICE

DO NOT activate dump mechanism (tub/bucket) if buggy is facing down hill. The possibility exist of the buggy tipping over causing equipment damage and severe bodily harm.

NOTICE

Releasing either one (dump control lever or pedal) before dump is completed, will cause the tub to return to the horizontal position.

The hydraulic dump can be controlled by the hand dump control lever or foot dump pedal.

1. To place the tub in the ***vertical*** position press down on the dump pedal (Figure 26**A**) or move the dump control lever forward (Figure 26**B**). The tub will move to the vertical position as long as pressure is continuously applied to the dump pedal or the dump control lever is held in the forward position.
2. To return the tub to the ***horizontal*** position, simply place your foot underneath the dump pedal (Figure 26**C**) and lift or pull back on the dump control lever (Figure 26**D)**.

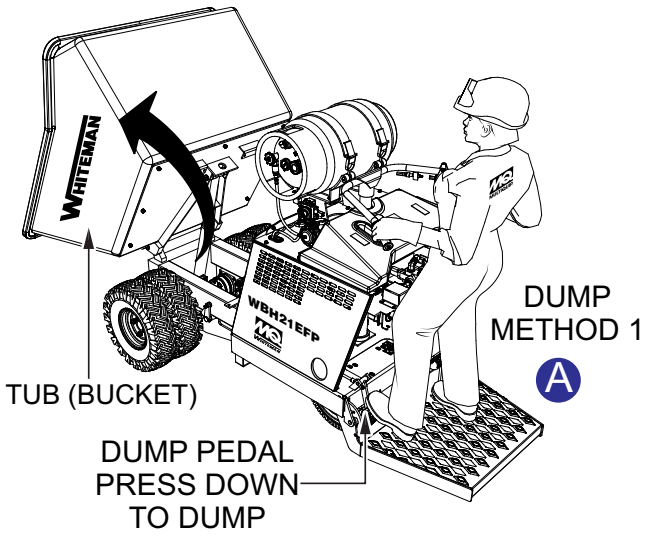

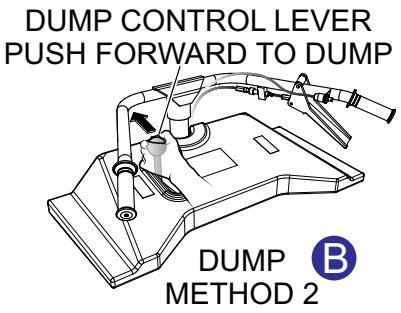

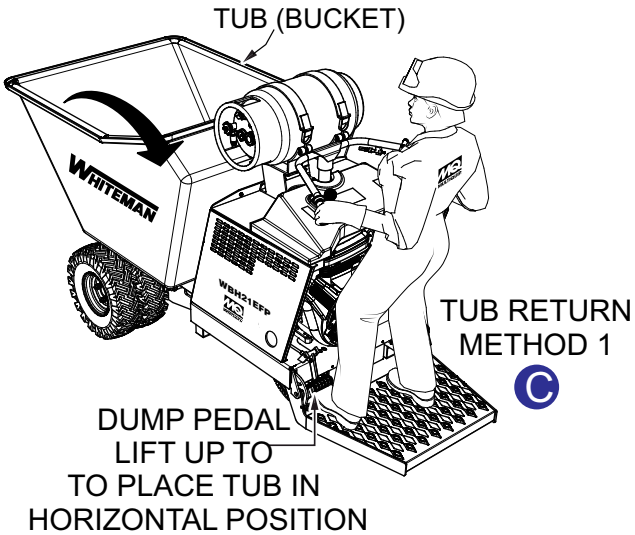

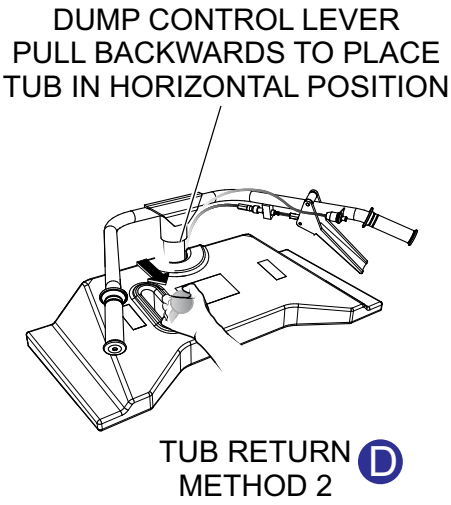

Figure 26. Tub Dumping

SHUTDOWN (NORMAL)

Correct shutdown is important to safe operation. Follow these general steps:

1. Come to a full stop.
2. Engage the parking brake (Figure 27).

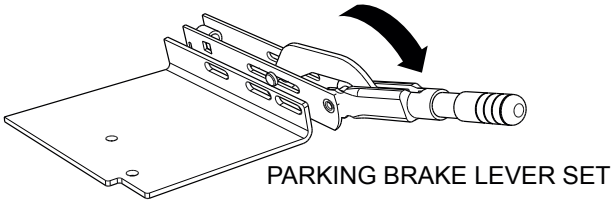

Figure 27. Parking Brake Set

3. Place the throttle lever (Figure 28) in the slow position. Idle engine 3-5 minutes for gradual cooling

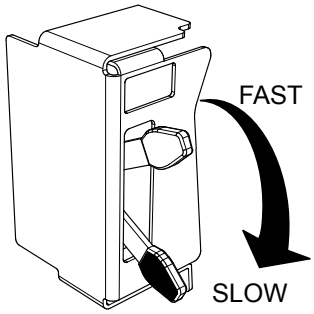

Figure 28. Throttle Lever (Slow)

4. Place the ignition switch key (Figure 29 in the **OFF** position

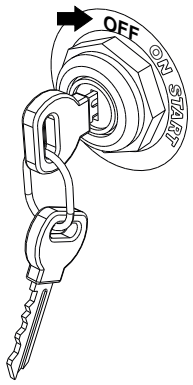

Figure 29. Ignition Switch (OFF)

5. Cycle hydraulic controls to eleminate residual pressure.
6. **CLOSE** the fuel shutoff valve (Figure 30). on the propane tank.

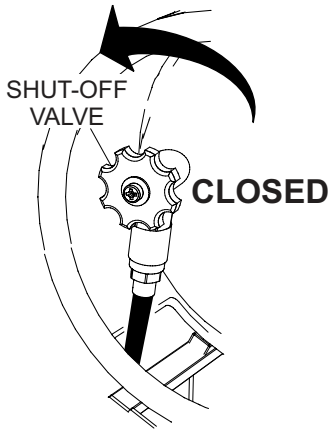

Figure 30. Fuel Shutoff Valve (CLOSED)

7. Remove ignition key.
8. Block wheels if on a slope or incline.

EMERGENCY SHUTDOWN

This power buggy is equipped with a safety kill switch. This switch is located on the right side of the handle bar.

1. Push the power buggy's kill switch inward (Figure 31) and listen for the engine to stop.

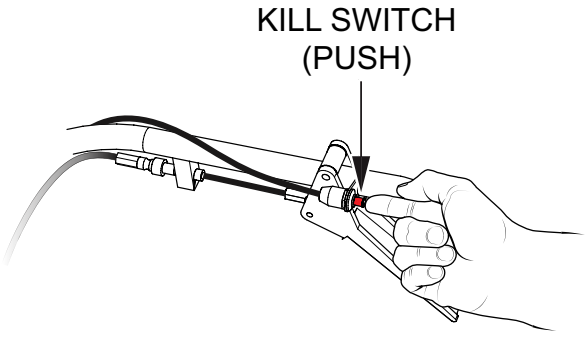

Figure 31. Safety Kill Switch

2. Engage the parking brake (Figure 27).
3. Place the ignition switch key (Figure 29) in the **OFF** position.

Table 5. Engine Maintenance Schedule							
DESCRIPTION (3)	*OPERATION*	*BEFORE EACH USE*	*FIRST MONTH OR 25 HRS.*	*EVERY 40 Hours*	*EVERY 6 MONTHS OR 100 HRS.*	*EVERY YEAR OR 300 HRS.*	*EVERY 2 YEARS OR 500 HRS.*
Engine Oil	*Check*	*X*					
	Change		*X*		*X*		
Engine Oil Filter	*Replace*	*Every 100 Hrs.*					
Air Cleaner	*Check*	*X*					
	Clean		*X (1)*				
	Change				*X*		*X (*)*
Spark Plugs	*Check/Adjust*				*X*		
	Replace					*X*	
Cooling Fins	*Clean*				*X*		
Propane Tank Components	*Check*	*X*					
Propane Hoses Regulator	*Check*			*X*			

* - Replace the paper filter element only.

(1) Service more frequently when used in DUSTY areas.

(2) These items should be serviced by your service dealer, unless you have the proper tools and are mechanically proficient. Refer to the Briggs & Stratton, Vanguard Shop Manual for service procedures.

(3) For commercial use, log hours of operation to determine proper maintenance intervals.

Table 6. Power Buggy Maintenance Schedule						
Check Item	OPERATION	DAILY	Periodic Maintenance Interval			
			Every 25 Hrs	Every 50 Hrs	Every 100-125 Hrs	Every 200 Hrs
Dump Cylinder	Grease		X			
Steering Bearing Flange	Grease		X			
Tub Bearing Pivot Block	Grease		X			
Tub/Fastners	Clean	X			X	
Tub For Cracks/Deformations	Check			X		
Tires For Severe Cuts/Wear	Check	X				
Hydraulic Oil Level	Check	X				X
Hydraulic Oil	Replace					X
Hydraulic Oil System	Check	X			1st time	X
Brakes	Check		X			

When performing any maintenance on the power buggy or engine, follow all safety messages and rules for safe operation stated at the beginning of this manual.

⚠ WARNING



Accidental starts can cause severe injury or death.



ALWAYS place the ON/OFF switch in the OFF position.



Disconnect and ground spark plug leads and disconnect negative battery cable from battery before servicing.

⚠ WARNING

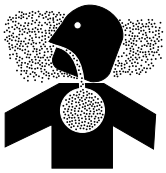

Some maintenance operations may require the engine to be run. Ensure that the maintenance area is well ventilated. Exhaust contains poisonous carbon monoxide gas that can cause unconsciousness and may result in **DEATH**

⚠ CAUTION



ALWAYS allow the engine to cool before servicing. **NEVER** attempt any maintenance work on a hot engine.

⚠ CAUTION

Operating the engine with a blocked screen (fan cover), dirty or plugged cooling fins, and/or cooling shrouds removed will cause engine damage due to overheating.

⚠ DANGER

DO NOT use gasoline as a cleaning solvent to avoid creating the risk of fire or an explosion.

AIR CLEANER (100 HOURS)

Thoroughly remove dirt and oil from the engine and control area. Clean or replace the air cleaner elements as necessary. Check and retighten all fasteners as necessary.

1. Release the latch tabs (Figure 32) on each side of the air cleaner cover, and remove cover.

NOTICE

Operating the engine with loose or damaged air cleaner components could allow unfiltered air into the engine causing premature wear and failure.

⚠ CAUTION



Wear protective equipment such as approved safety glasses or face shields and dust masks or respirators when cleaning air filters with compressed air.

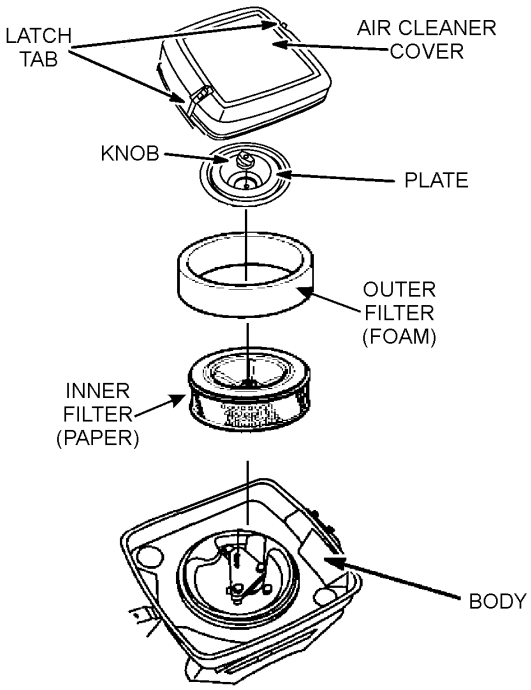

Figure 32. Air Filter Components

2. Remove knob and plate. Carefully remove air filter to prevent dirt and debris from entering carburetor.
3. Remove outer foam filter.
4. Remove inner paper filter.
5. Inspect both air filter elements, replace them if necessary.

6. To clean the paper air filter (Figure 33), tap the filter element several times on a hard surface to remove dirt, or blow compressed air [not to exceed 30 psi (207 kPa, 2.1 kgf/cm2)] through the filter element from the air cleaner case side.

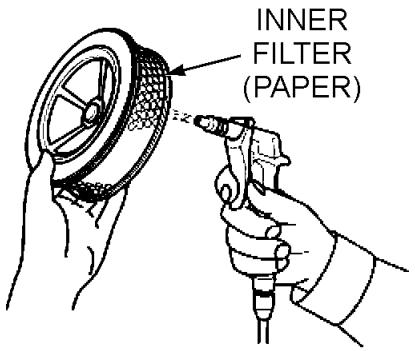

Figure 33. Cleaning Inner Paper Filter

7. **NEVER!** try to brush off dirt; brushing will force dirt into the fibers. If the paper element is excessively dirty, replace element.

8. Clean the foam air filter (Figure 34) element in warm soapy water, rinse and allow to dry thoroughly or clean with a nonflammable solvent and allow to dry. **DO NOT** pour any type of oil into the foam element.

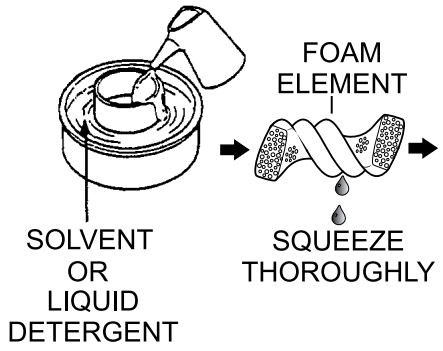

Figure 34. Cleaning Foam Element

9. Wipe dirt from the inside of the air cleaner body and cover, using a moist cloth. Be careful not to let any dirt or debris enter the air chamber that leads to the carburetor.

10. Reinstall the foam air filter element to the air cleaner cover, then reinstall the paper air filter element and cover to the air cleaner case. Securely latch the hook tabs onto the air cleaner cover.

CHANGING ENGINE OIL (100 HOURS)

1. Drain the engine oil when the oil is warm as shown in (Figure 35).

2. Remove the oil drain bolt and sealing washer and allow the oil to drain into a suitable container.

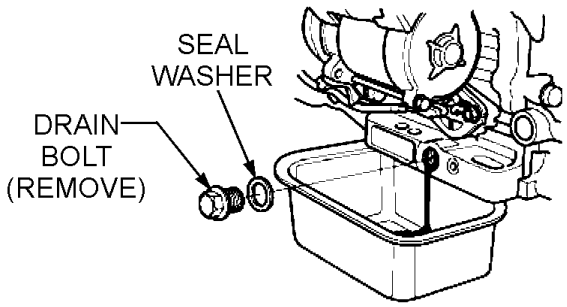

Figure 35. Draining Engine Oil

3. Reinstall drain bolt with sealing washer and tighten securely.

4. Replace engine oil with recommended type oil as listed in Table 4. For engine oil capacity, see Table 2. **DO NOT** over fill.

OIL FILTER (200 HOURS)

1. Replace the engine oil filter (Figure 36) every 200 hours.

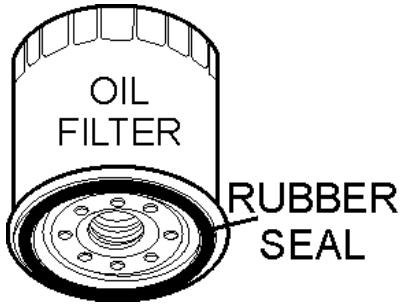

Figure 36. Oil Filter

2. Be sure to coat the seal of the new oil filter with clean engine oil.

PROPANE TANK AND COMPONENTS

Inspection (Daily)

⚠ CAUTION

NEVER use bare hands when checking for leaks. Escaping propane vapor and liquid freezes skin on contact.

1. Visually inspect the propane tank (Figure 37), hose and fitting and be alert to any foul odors.

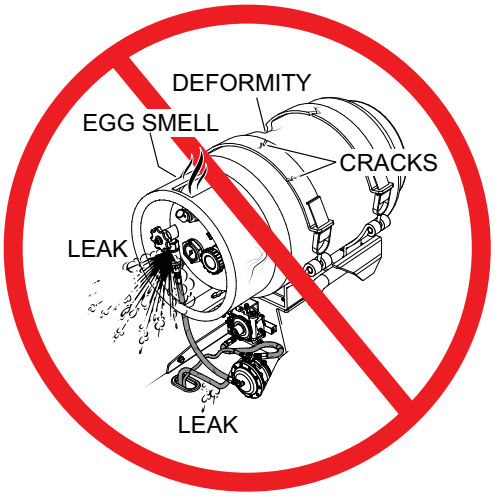

Figure 37. Propane Tank Inspection

2. Propane has a ***rotten egg smell*** added to it to help detect a gas leak.
3. **DO NOT** use the propane system if the hoses are deformed, damaged, kinked or flattened.
4. Ensure the propane tank is free of dents or damage. If the tank shows signs of damage, replace it immediately.
5. Check the valve fitting openings for dirt or debris.
6. Check straps for cracks or deformity
7. Slowly open the shutoff valve all the way and listen for a continuous hiss from the regulator, which may indicate a leak.
8. Ensure that the tank is securely mounted to the equipment. If the tank is loose, the hose or fittings may leak.

PROPANE TANK LEAK DETECTION

1. Apply an approved leak detector (Figure 38) solution, obtained from a trained and qualified propane distributer, or a thick non-ammonia soapy water solution (1:1 mixture of 1 part non-ammonia soap and 1 part of water).

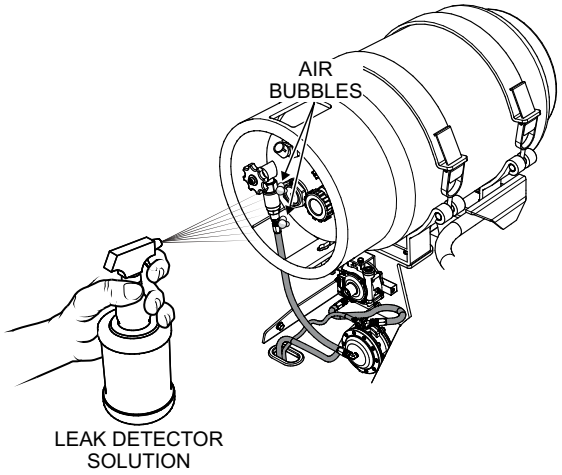

Figure 38. Leak Detection

2. Using a small brush or spray bottle, apply the solution around all fittings on the propane tank, regulator and connections.
3. Slowly open the gas valve a half-turn.
4. If you detect bubbles, the joint or fitting has a leak. Shut off the valve, tighten the leaking connection and slowly open the valve again to half-turn. If leak persists, replace fitting

Fuel Lines

- Check fuel lines and connections regularly for leaks or damage. Repair or replace as necessary.
- Replace fuel lines every two years to maintain the line's performance and flexibility.

TROUBLE SHOOTING PROPANE FUEL SYSTEMS

DANGER

Use extreme caution when handling propane. Propane is ***flammable*** and ***explosive*** and can cause personal injury if not handled properly.

Use the following steps when the engine is not igniting or irregular idling:

Propane Vapor Cylinder

- Check the propane vapor cylinder service valve to see if it is open. Open if closed and restart the engine.
- Check the propane cylinder fuel gauge. Refill if empty.

High and Low Pressure Hoses

- Check both ends of the high pressure fuel line between the propane cylinder and regulator solenoid shut-off valve. Make sure both ends are threaded tight on the brass fittings.
- Do the same with the low pressure hose to make sure that both hose clamps on the end of the hose are tight.

Regulator

- Open the Schrader valve cap and install a pressure gauge with a range of 0-15 psi.
- Turn the key to the on position without turning the engine over and check the pressure at the regulator's Schrader valve. The pressure should be between 3.5~4.0 psi (24~ 27 kPa) adjust regulator if not within the pressure range.

NOTICE

If there is pressure at the regulator the engine is getting fuel. If no pressure is present check the trouble-shooting points above.

- Once complete and still no pressure, proceed with setting the fuel flow on the regulator.
- If you still show no pressure on the psi gauge, turn the idler screw clockwise to increase fuel flow.
- If pressure is still not present at the gauge after turning the adjustment screw to the complete open position, then the regulator is not working and will need to be replaced.
- If the engine will not start and fuel is getting thru the regulator, most likely the problem is not fuel related.

SPARK PLUG ADJUSTMENT

1. Make sure the engine is cool before servicing the spark plugs.
2. Disconnect the spark plug caps. Check for dirt and remove any dirt from around the spark plug area.
3. Remove the spark plugs with a 5/8-inch spark plug wrench.
4. If the spark plugs are damaged, the sealing washer is in poor condition, or if the electrode is worn, replace the spark plugs.
5. Measure the spark plug electrode gap (Figure 39) with a wire-type feeler gauge. If needed, adjust the gap to 0.7 - 0.8 mm (0.028 - 0.031 in), by carefully bending the side electrode.

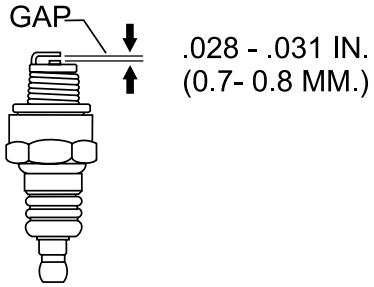

Figure 39. Spark Plug Gap

6. Install the spark plug carefully, by hand, to avoid cross threading.
7. After the spark plug is seated, tighten with a 5/8-inch spark plug wrench to compress the sealing washer.
8. When installing a new spark plug, tighten 1/2 turn, after the spark plug seats, to compress the washer.
9. When reinstalling the original spark plug, tighten 1/8 to 1/4 turn after the spark plug seats to compress the washer.
10. Reattach the spark plug caps.

ENGINE TUNE-UP ENGINE

See your engine manual for specific information on tuning up your engine, checking and gaping the spark plugs, etc.

NOTICE

See the engine manual supplied with your machine for appropriate engine maintenance schedule and troubleshooting guide for problems.

ADDING HYDRAULIC OIL

1. Check the hydraulic oil level in the hydraulic oil tank, by reading the hydraulic oil sight glass (Figure 40) mounted on the hydraulic oil tank.

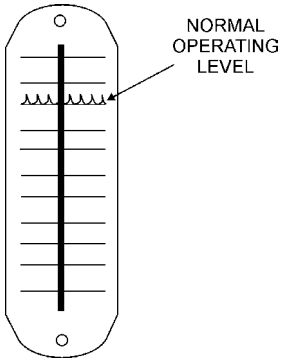

Figure 40. Hydraulic Oil Sight Glass

2. If the hydraulic oil level is low, fill to the proper level as referenced in Table 1.
3. To gain access to the hydraulic oil tank filler hole, the tub (Figure 41) must be placed in the dump position (vertical).
4. Start the engine as outlined in the starting procedure, then place the tub in the dumping position.

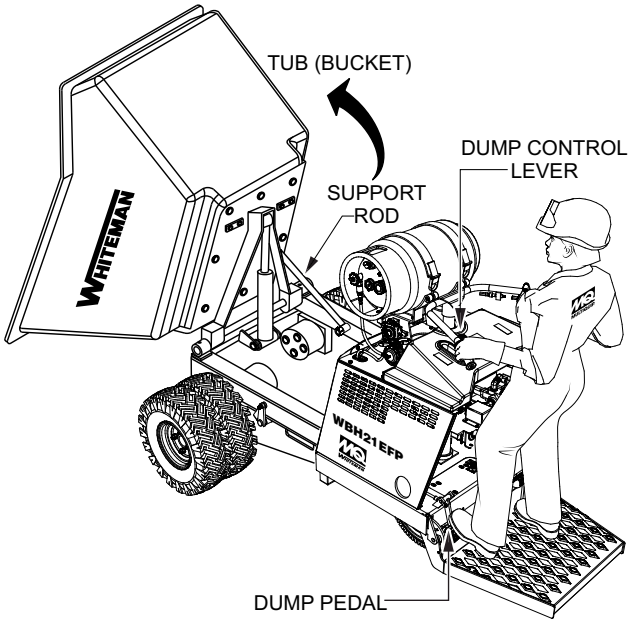

Figure 41. Tub Dump Position Hydraulic Oil Access

5. Use the tub support rod to support the tub, then turn the engine **OFF**.
6. Remove the two bolts that secure the access cover(Figure 42) to the buggy frame.

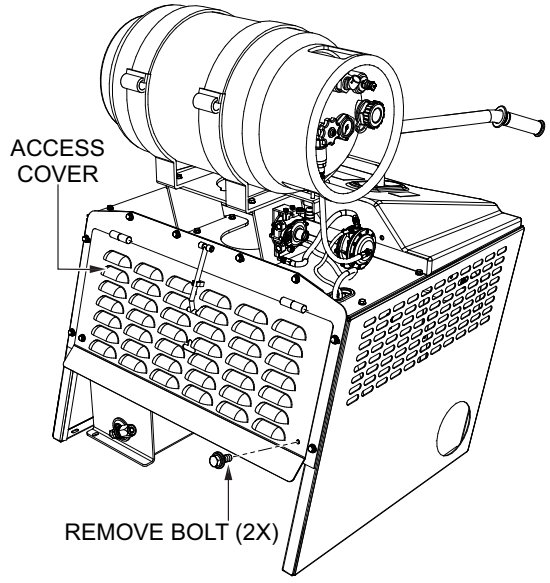

Figure 42. Access Cover

7. Lift up on access door and secure latch (Figure 43).

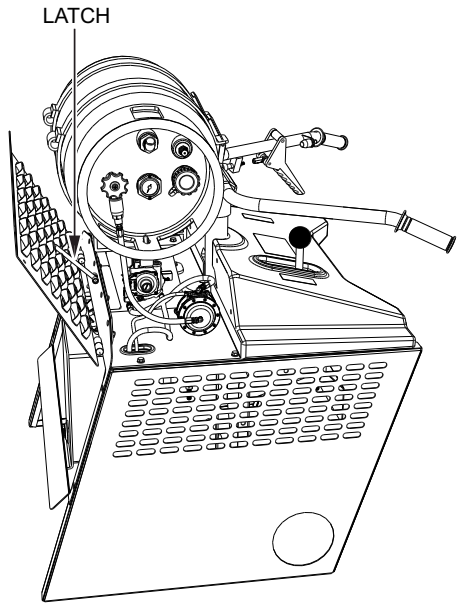

Figure 43. Securing Access Cover Latch

8. Remove the hydraulic oil filler cap (Figure 44), and add hydraulic oil as required. Fill to the normal operating mark as indicated on the hydraulic oil sight gauge.

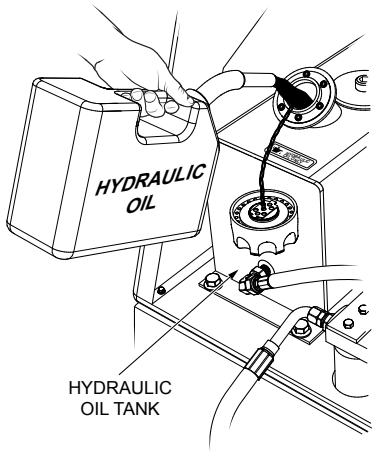

Figure 44. Adding Hydraulic Oil

> ***NOTICE***
>
> In climates where temperatures are below 35°F (1.6°C), hard starting may occur. In these cases, the hydraulic oil should be switched to a thinner 15 weight hydraulic fluid.

9. Replace hydraulic oil after every 200 hours of operation. The reservoir capacity is 5.3 gallons (20.4 liters). The hydraulic oil filter should be changed each time the hydraulic oil is changed.

HYDRAULIC OIL FILTER REPLACEMENT

1. Replace the hydraulic oil filter (Figure 45) every 200 hours. Replace with only recommended type filter.

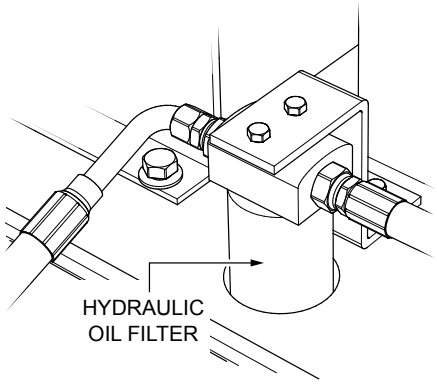

Figure 45. Hydraulic Oil Filter

Hydraulic Drive Motors

The hydraulic drive motors (Figure 46) are extremely reliable and will not need maintenance or repair under normal conditions.

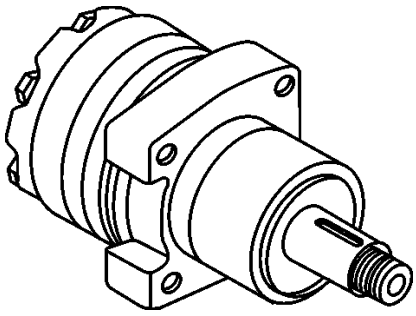

Figure 46. Hydraulic Drive Motor

> ***NOTICE***
>
> Contact Multiquip's Service Department should any problems develop with the hydraulic drive motors

BRAKE ADJUSTMENT

Brake adjustment can be made on the brake linkage rod located on the right-side of the buggy.

1. Place the parking brake lever in the engaged position. The parking brake should be adjusted so that the buggy will not move.
2. Adjustment is provided by a knob (Figure 47) at the end of the parking brake lever. To tighten, turn the knob clockwise.

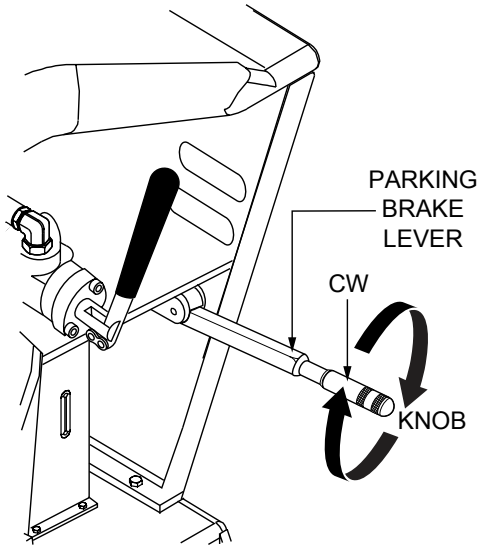

Figure 47. Parking Brake Adjustment

3. Adjust the knob sufficiently tight so that when the parking brake lever is pulled upward to the engaged position (set), there is a sufficient amount of tension.
4. With the parking brake engaged, the buggy should not move when the engine is started and the travel lever placed in the forward position.

CHASSIS LUBRICATION

This power buggy is equipped with ***five*** zerk fittings (Figure 48). Lubricate these zerk fittings each day before operating the buggy.

1. Lubricate with high grade chassis lubricant at all lubricating points listed below:
   - Dump Cylinder Pivots - Two zerk fittings
   - Tub Bearing Pivot Blocks (Underside of Tub) - Two zerk fittings.
   - Steering Bearing Flange (Front Side of Handle Bar) - One zerk fitting.

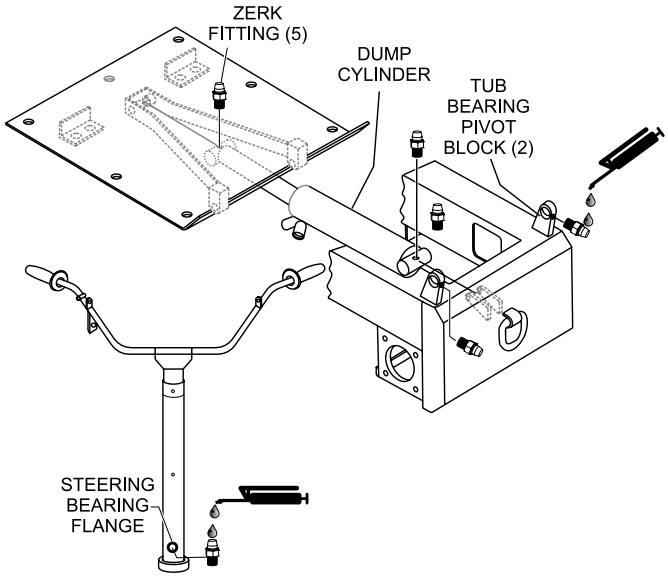

Figure 48. Lubrication Points

2. Remove rear wheel hubs and repack bearings after every 400 hours of operation.

PUMP CONTROL LEVER ADJUSTMENT

Inspect the speed control return springs. The tension should be sufficient to allow lever to snap back when released. Replace any broken, deformed, or damaged springs.

If the power buggy tends to ***creep*** in the forward or reverse directions after you release the speed control lever, the pump control lever requires adjustment.

1. Place the machines drive wheels on jacks or blocks free from ground contact.
2. Locate the ***pump control lever*** adjustment bolt (Figure 49).

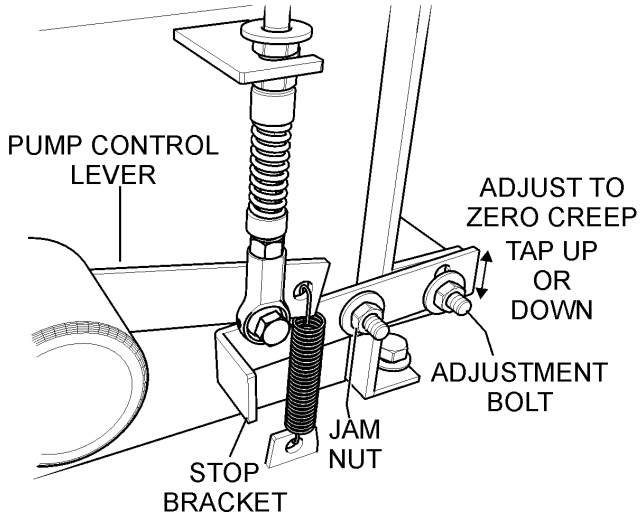

Figure 49. Pump Control Lever Adjustment

3. Loosen the jam nut.
4. Start the engine and place the buggy's directional control lever in the forward then reverse directions while observing for wheel movement.
5. The pump lever has a very sensitive neutral position of about 1/32" to 1/16". If the wheels are creeping, turn the adjusting bolt in very slight increments.
6. Tap lever up or down to determine neutral position. Tighten both nuts when correct neutral position has been achieved.
7. If wheels are creeping in reverse, turn the adjusting bolt counterclockwise. If wheels are creeping forward, turn the adjusting bolt clockwise.

TIRES/WHEELS/LUG NUTS

Tires and wheels are very important and critical components of the buggy. When specifying or replacing the wheels, it is important that the wheels, tires, and axle are properly matched.

CAUTION

DO NOT attempt to repair or modify a wheel. If the rim is cracked, replace the rim immediately and inspect the tire for cuts, wear, and deformations.

TIRE WEAR

The tires (Figure 50) used on this power buggy are foam filled and therefore do not have to be inflated. However the tires shoud be inspected for cuts, wear and deformity.

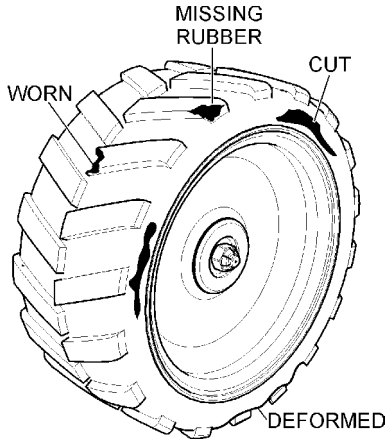

Figure 50. Tire Inspection

LUG NUT TORQUE REQUIREMENTS

It is extremely important to apply and maintain proper wheel mounting torque on the trailer. Be sure to use only the fasteners matched to the cone angle of the wheel. Proper procedure for attachment of the wheels is as follows:

1. Start all wheel lug nuts by hand.
2. Torque all lug nuts (Figure 51) in sequence. **DO NOT** torque the wheel lug nuts all the way down. Tighten each lug nut in 3 separate passes as defined by Table 7

Table 7. Tire Torque Requirements			
Wheel Size	First Pass FT-LBS	Second Pass FT-LBS	Third Pass FT-LBS
480 x 8 in.	20-25	35-40	50-65

3. After first road use, retorque all lug nuts in sequence Check all wheel lug nuts periodically.

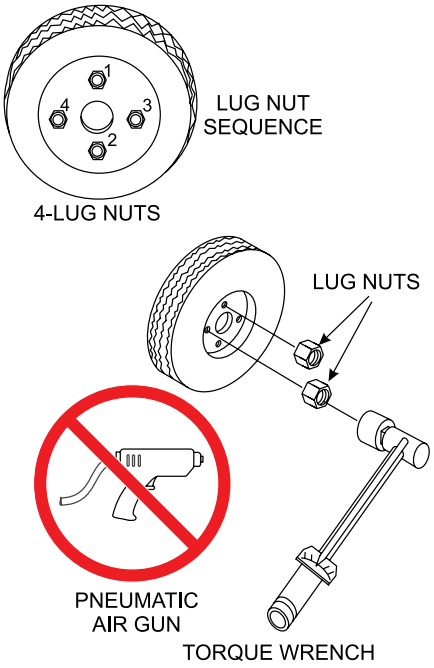

Figure 51. Lug Nut Torque Sequence

LONG TERM STORAGE

- Drain the fuel tank completely, or add STA-BIL to the fuel.
- Remove spark plug and pour a few drops of motor oil into cylinder. Crank engine 3 to 4 times so that oil reaches all internal parts.
- Clean exterior with a cloth soaked in clean oil.
- Remove the battery.
- Store unit covered with plastic sheet in moisture and dust-free location out of direct sunlight.

CAUTION

NEVER store the power buggy with fuel in the tank for any extended period of time. **ALWAYS** clean up spilled fuel immediately.

Troubleshooting (Power Buggy)		
Symptom	**Possible Problem**	**Solution**
Loss of Power.	Speed control cable out of adjustment?	Adjust speed control cable. Replace cable if necessary
	Hydraulic oil level low.?	Check hydraulic oil level. Add oil if necessary.
	Contaminated hydraulic oil filter?	Replace hydraulic oil filter. Clean system.
	Low engine RPM?	Check engine speed.
Loss of Travel.	Forward/Reverse lever in neutral position?	Place lever in either forward or reverse position. Check hydraulic motors.
	Parking brake partially engaged?	Release parking brake.
System Operating Hot.	Hydraulic oil level low?	Check hydraulic oil level add hydraulic oil if necessary.
	Defective cooling fan?	Inspect cooling fan, replace if necessary.
Slow Dumping.	Low engine speed?	Check engine speed. Adjust engine speed if necessary.
	Dump cylinder is internally bypassing oil?	Replace dump cylinder or seal.
	Dump valve pressure low?	Check dump valve relief pressure. Pressure should be 1000 psi ± 50 psi.
System jerky when started.	Speed cable out of adjustment?	Adjust speed control cable.
	Defective drive motors?	Check drive motors, replace if necessary.
Difficult to steer.	Un-lubricated steering column?	Lubricate steering column.
Parking brake will not hold.	Brake linkage out of adjustment?	Adjust.
Difficulty in stopping.	Brakes out of adjustment?	Brake lining worn. Replace brake lining.
Engine will not start.	Low on fuel or propane tank empty?	Add fuel.
	Defective kill switch?	Check kill switch. Replace if necessary
	Engine ON/OFF switch in OFF position?	Set engine ON/OFF switch to ON position.
	Propane Shut-off valve CLOSED?	Open shut-off valve.
	Defective propane fuel regulator?	Check or replace fuel regulator

Troubleshooting (Engine)		
Symptom	**Possible Problem**	**Solution**
Difficult to start, fuel is available, but no spark at spark plug.	Spark plug bridging?	Check gap, insulation or replace spark plug.
	Carbon deposit on spark plug?	Clean or replace spark plug.
	Short circuit due to deficient spark plug insulation?	Check spark plug insulation, replace if worn.
	Improper spark plug gap?	Set to proper gap.
	Spark plug is red?	Check transistor ignition unit.
	Spark plug is bluish white?	If insufficient compression, repair or replace engine. If injected air leaking, correct leak. If carburetor jets clogged, clean carburetor.
	No spark present at tip of spark plug?	Check transistor ignition unit is broken, and replace defective unit. Check if voltage cord cracked or broken and replace. Check if spark plug if fouled and replace.
	No oil?	Add oil as required.
	Oil pressure alarm lamp blinks upon starting? (if applicable)	Check automatic shutdown circuit, "oil sensor". (if applicable)
Difficult to start, fuel is available, and spark is present at the spark plug.	ON/OFF switch is shorted?	Check switch wiring, replace switch.
	Ignition coil defective?	Replace ignition coil.
	Improper spark gap, points dirty?	Set correct spark gap and clean points.
	Condenser insulation worn or short circuiting?	Replace condenser.
	Spark plug wire broken or short circuiting?	Replace defective spark plug wiring.
Difficult to start, fuel is available, spark is present and compression is normal.	Defective fuel pressure regulator?	Check or replace regulator. Contact MQ Service Dept.
	Air cleaner dirty?	Clean or replace air cleaner.
Difficult to start, fuel is available, spark is present and compression is low.	Suction/exhaust valve stuck or protruded?	Reseat valves.
	Piston ring and/or cylinder worn?	Replace piston rings and/or piston.
	Cylinder head and/or spark plug not tightened properly?	Torque cylinder head bolts and spark plug.
	Head gasket and/or spark plug gasket damaged?	Replace head and spark plug gaskets.
No fuel present at carburetor.	Propane tank empty?	Fill with correct type of LPGl.
	Shutoff valve closed?	Open shutoff valve
	Defective propane regulator?	Check or replace regulator.
	Defective propane fuel hoses?	check or replace hoses.

Troubleshooting (Engine) - continued		
Symptom	**Possible Problem**	**Solution**
Weak in power, compression is proper and does not misfire.	Air cleaner dirty?	Clean or replace air cleaner.
	Improper level in carburetor?	Check float adjustment, rebuild carburetor.
	Defective spark plug?	Clean or replace spark plug.
	Improper spark plug?	Set to proper gap.
Weak in power, compression is proper but misfire.	Dirty spark plug?	Clean or replace spark plug.
	Ignition coil defective?	Replace ignition coil.
Engine overheats	Wrong type of fuel?	Replace with correct type of fuel.
	Cooling fins dirty?	Clean cooling fins.
	Intake air restricted?	Clear intake of dirt and debris. Replace air cleaner elements as necessary.
	Oil level too low or too high?	Adjust oil to proper level.
Rotational speed fluctuates.	Governor adjusted incorrectly?	Adjust governor.
	Governor spring defective?	Replace governor spring.
	Fuel flow restricted?	Check entire fuel system.
Recoil starter malfunctions. (if applicable)	Recoil mechanism clogged with dust and dirt?	Clean recoil assembly with soap and water.
	Spiral spring loose?	Replace spiral spring.
Starter malfunctions.	Loose, damaged wiring?	Ensure tight, clean connections on battery and starter.
	Battery insufficiently charged?	Recharge or replace battery.
	Starter damaged or internally shorted?	Replace starter.
Burns too much fuel.	Over-accumulation of exhaust products?	Check and clean valves. Check muffler and replace if necessary.
	Wrong spark plug?	Replace spark plug with manufacturer's suggested type.
Exhaust color is continuously "white".	Lubricating oil is wrong viscosity?	Replace lubricating oil with correct viscosity.
	Worn rings?	Replace rings.
Exhaust color is continuously "black".	Air cleaner clogged?	Clean or replace air cleaner.
	Poor carburetor adjustment, engine runs too rich?	Adjust fuel pressure regulator.
Will not start, no power with key "ON". (if applicable)	ON/OFF device not activated ON?	Turn on ON/OFF device.
	Battery disconnected or discharged?	Check cable connections. Charge or replace battery
	Ignition switch/wiring defective?	Replace ignition switch. Check wiring.

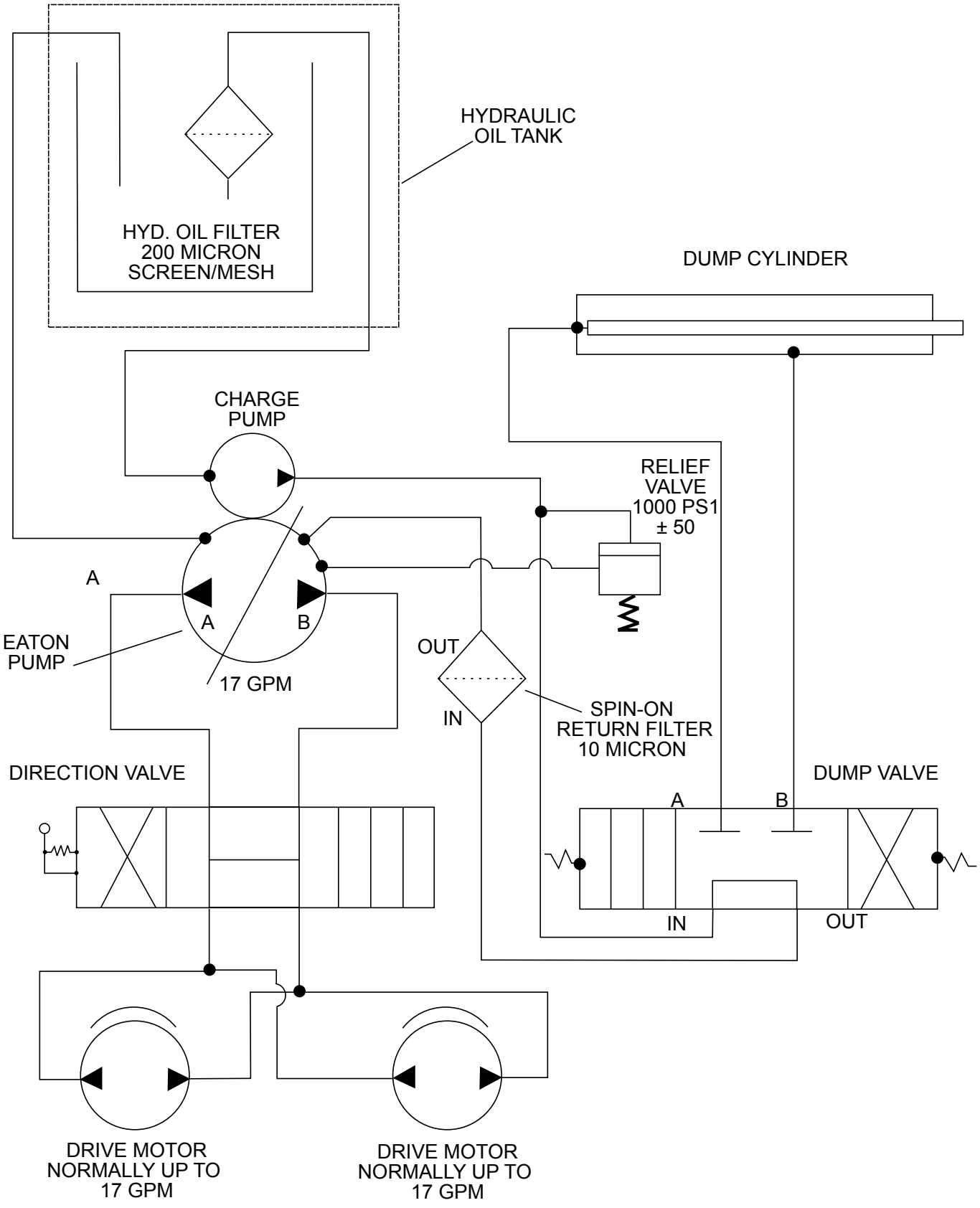
HYDRAULIC
OIL TANK
HYD. OIL FILTER
200 MICRON
SCREEN/MESH
DUMP CYLINDER
CHARGE
PUMP
RELIEF
VALVE
1000 PS1
± 50
A
A
B
EATON
PUMP
17 GPM
OUT
IN
SPIN-ON
RETURN FILTER
10 MICRON
DIRECTION VALVE
DUMP VALVE
A
B
IN
OUT
DRIVE MOTOR
NORMALLY UP TO
17 GPM
DRIVE MOTOR
NORMALLY UP TO
17 GPM

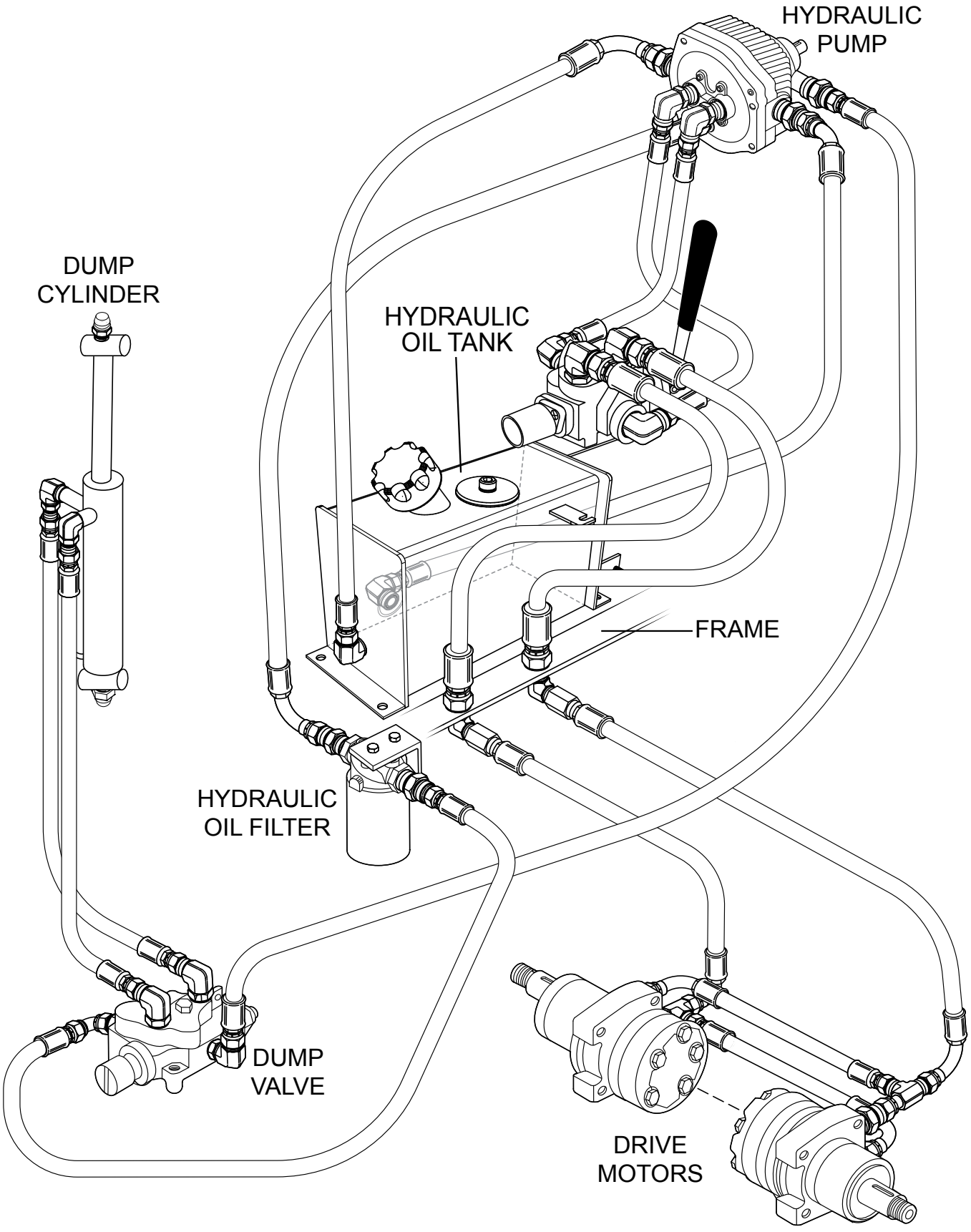
HYDRAULIC
PUMP
DUMP
CYLINDER
HYDRAULIC
OIL TANK
FRAME
HYDRAULIC
OIL FILTER
DUMP
VALVE
DRIVE
MOTORS

HYDRO-GEAR HYDRAULIC SYSTEM DIAGRAM

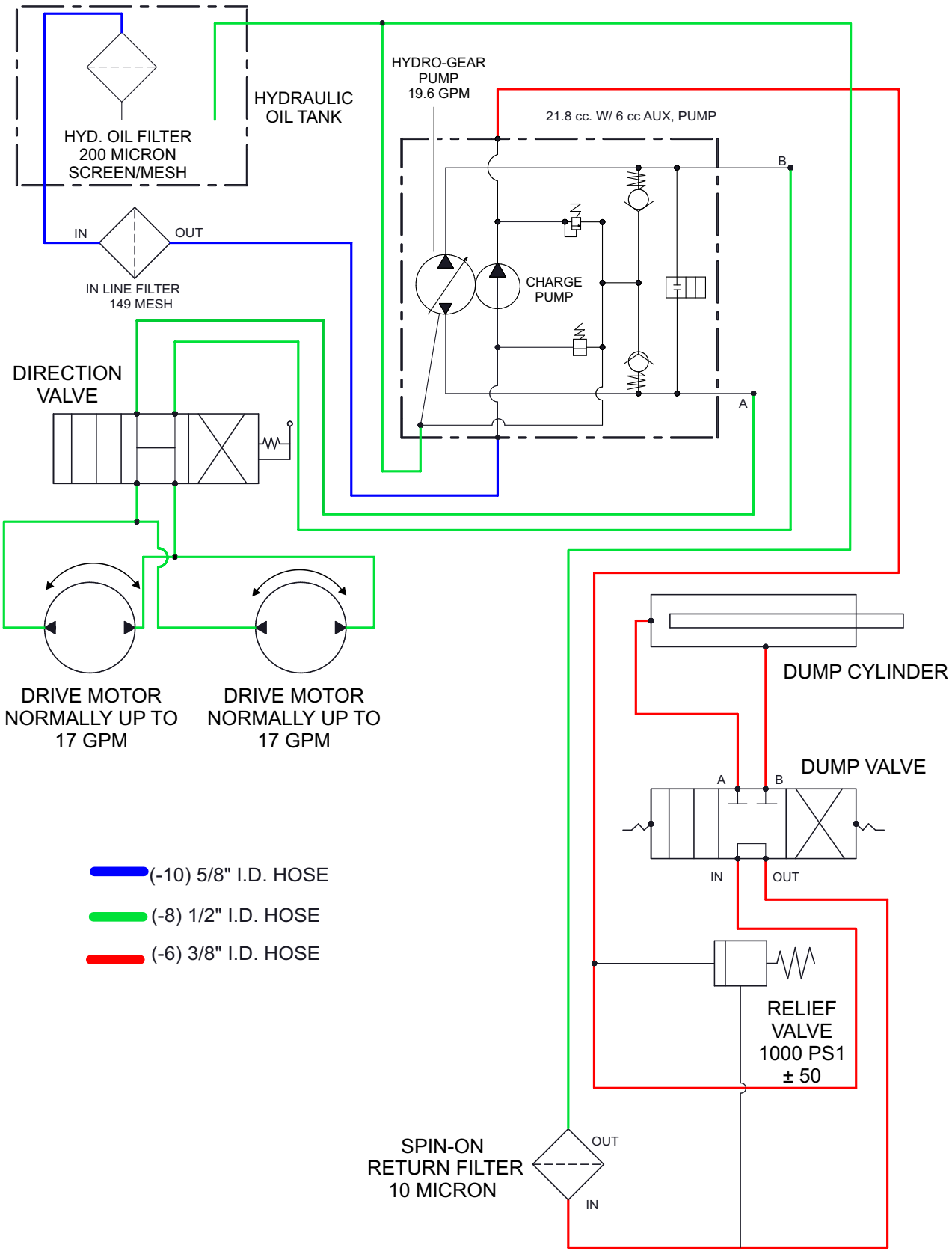

HYDRO-GEAR HYDRAULIC HOSE CONNECTIONS

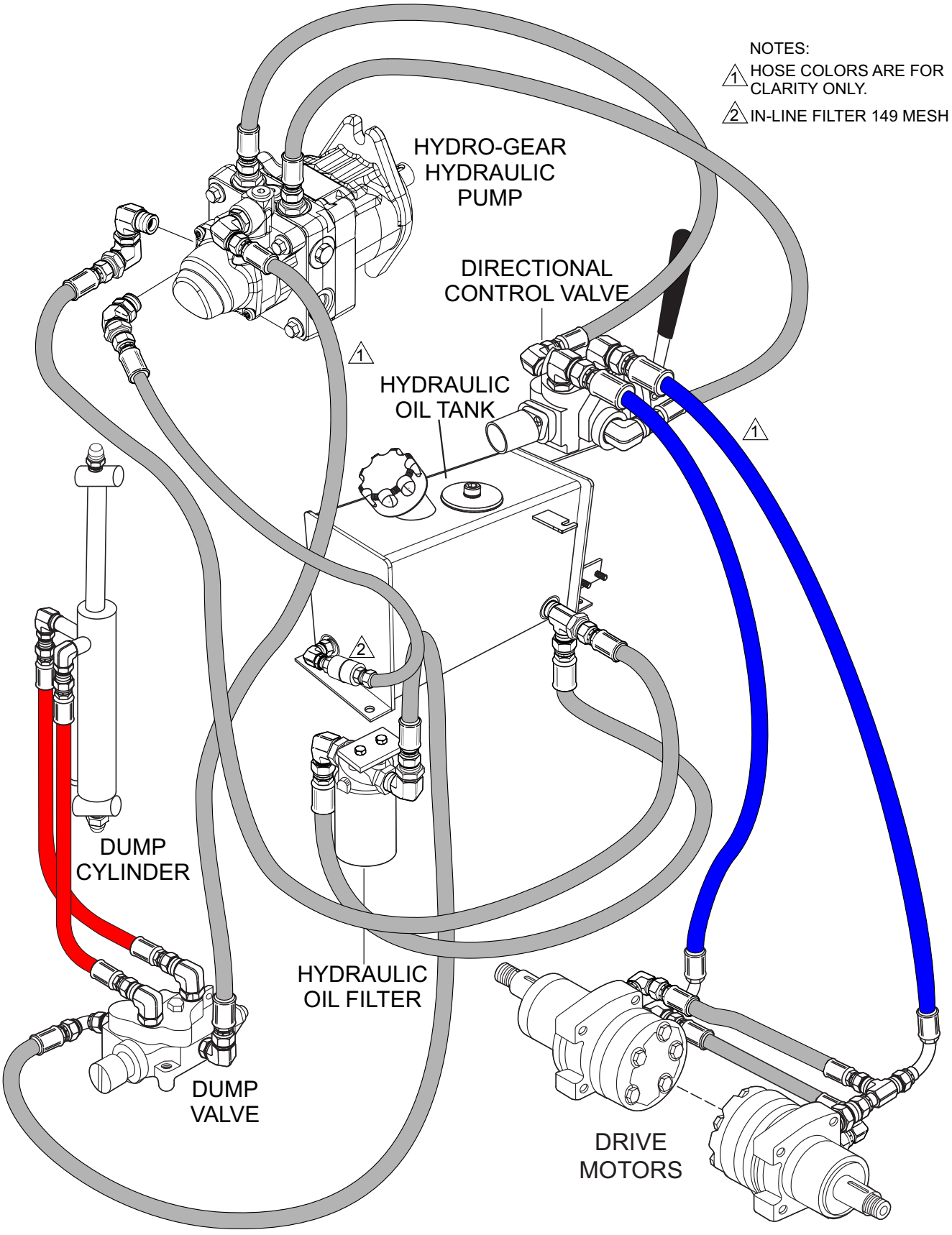

IGNITION SWITCH	
POSITION	CIRCUIT MAKE
OFF	G+M+A
RUN	B+L+A
START	B+L+S

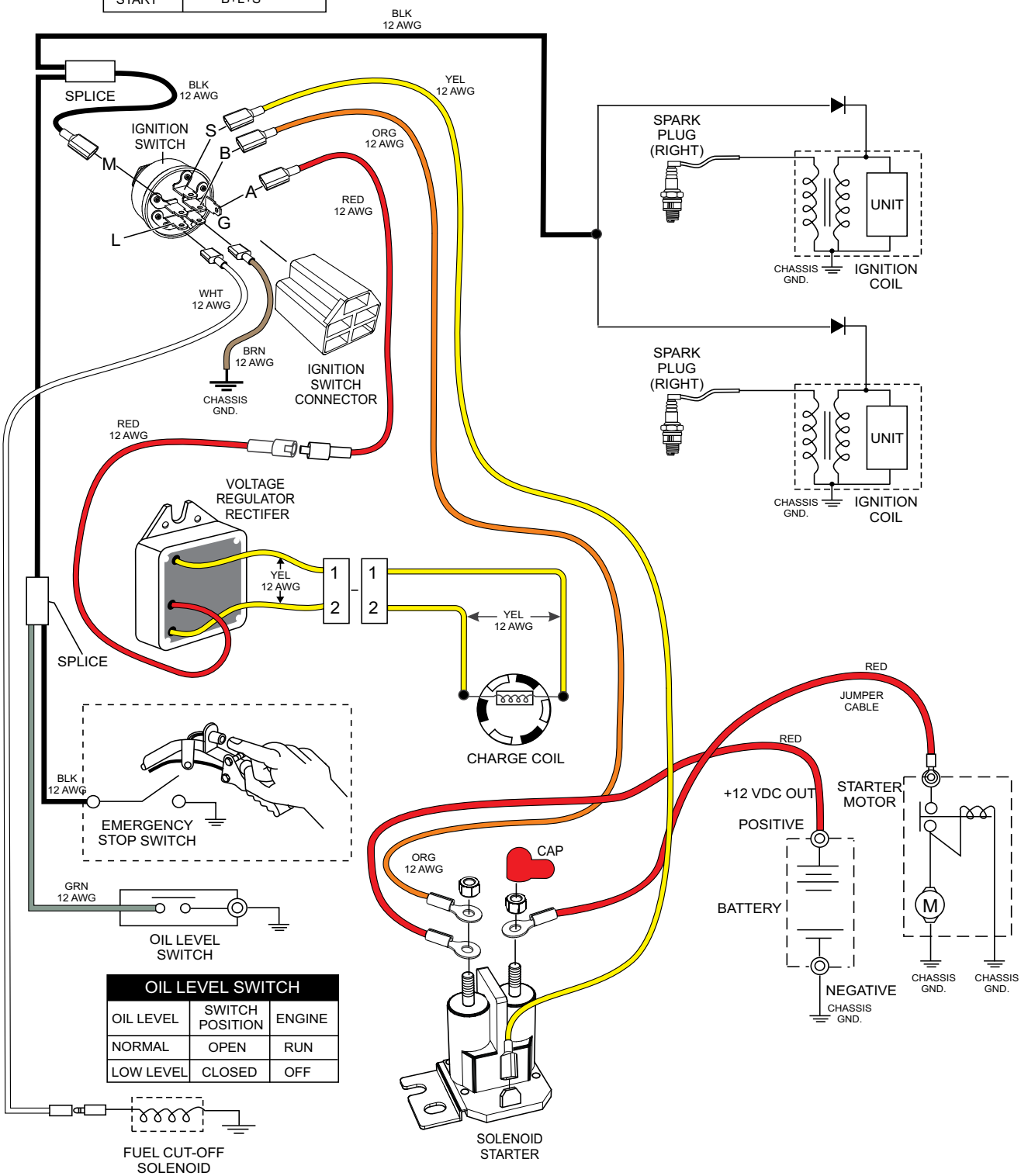

OIL LEVEL SWITCH		
OIL LEVEL	SWITCH POSITION	ENGINE
NORMAL	OPEN	RUN
LOW LEVEL	CLOSED	OFF

NOTES

OPERATION MANUAL

HERE'S HOW TO GET HELP

PLEASE HAVE THE MODEL AND SERIAL NUMBER ON-HAND WHEN CALLING

UNITED STATES

Multiquip Inc.

(310) 537- 3700
6141 Katella Avenue Suite 200
Cypress, CA 90630
E-MAIL: mq@multiquip.com
WEBSITE: www.multiquip.com

CANADA

Multiquip

(450) 625-2244
4110 Industriel Boul.
Laval, Quebec, Canada H7L 6V3
E-MAIL: infocanada@multiquip.com

UNITED KINGDOM

Multiquip (UK) Limited Head Office

0161 339 2223
Unit 2, Northpoint Industrial Estate, Globe Lane,
Dukinfield, Cheshire SK16 4UJ
E-MAIL: sales@multiquip.co.uk

© COPYRIGHT 2024, MULTIQUIP INC.

Multiquip Inc, the MQ logo are registered trademarks of Multiquip Inc. and may not be used, reproduced, or altered without written permission. All other trademarks are the property of their respective owners and used with permission.

This manual MUST accompany the equipment at all times. This manual is considered a permanent part of the equipment and should remain with the unit if resold.

The information and specifications included in this publication were in effect at the time of approval for printing. Illustrations, descriptions, references and technical data contained in this manual are for guidance only and may not be considered as binding. Multiquip Inc. reserves the right to discontinue or change specifications, design or the information published in this publication at any time without notice and without incurring any obligations.

MULTIQUIP®