OPERATION MANUAL

MULTIQUIP®

ESSICK

MODEL
EM70SLF
PLASTER AND MORTAR MIXER
(MPOWER 177F-BH 9.0 HP GASOLINE ENGINE)

Revision #0 (09/22/22)

To find the latest revision of this publication or associated parts manual, visit our website at:
www.multiquip.com

THIS MANUAL MUST ACCOMPANY THE EQUIPMENT AT ALL TIMES.

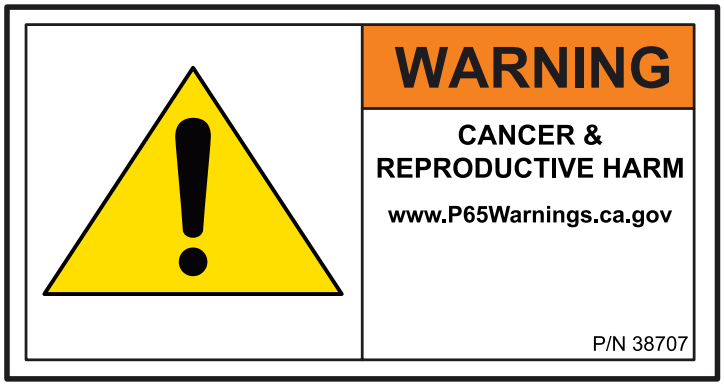
WARNING
CANCER &
REPRODUCTIVE HARM
www.P65Warnings.ca.gov
P/N 38707

⚠ WARNING



SILICOSIS WARNING

Grinding/cutting/drilling of masonry, concrete, metal and other materials with silica in their composition may give off dust or mists containing crystalline silica. Silica is a basic component of sand, quartz, brick clay, granite and numerous other minerals and rocks. Repeated and/or substantial inhalation of airborne crystalline silica can cause serious or fatal respiratory diseases, including silicosis. In addition, California and some other authorities have listed respirable crystalline silica as a substance known to cause cancer. When cutting such materials, always follow the respiratory precautions mentioned above.

⚠ WARNING



RESPIRATORY HAZARDS

Grinding/cutting/drilling of masonry, concrete, metal and other materials can generate dust, mists and fumes containing chemicals known to cause serious or fatal injury or illness, such as respiratory disease, cancer, birth defects or other reproductive harm. If you are unfamiliar with the risks associated with the particular process and/or material being cut or the composition of the tool being used, review the material safety data sheet and/or consult your employer, the material manufacturer/supplier, governmental agencies such as OSHA and NIOSH and other sources on hazardous materials. California and some other authorities, for instance, have published lists of substances known to cause cancer, reproductive toxicity, or other harmful effects.

Control dust, mist and fumes at the source where possible. In this regard use good work practices and follow the recommendations of the manufacturers or suppliers, OSHA/NIOSH, and occupational and trade associations. Water should be used for dust suppression when wet cutting is feasible. When the hazards from inhalation of dust, mists and fumes cannot be eliminated, the operator and any bystanders should always wear a respirator approved by NIOSH/MSHA for the materials being used.

EM70SLF
Plaster and Mortar Mixer

Proposition 65 Warning 2
Silicosis/Respiratory Warnings 3
Training Checklist 5
Nameplate And Safety Decals 6
Safety Information 7-11
Towing Guidelines 12-13
Safety Chain Connection 14
Specifications (Mixer) 15
Specifications (Engine) 16
General Information 17
Components (Mixer) 18-19
Components (Engine) 20
Inspection 21-23
Operation 24-28
Maintenance (Engine) 29-36
Troubleshooting (Mixer) 37
Troubleshooting (Engine) 38-39

NOTICE

Specifications are subject to change without notice.

Training Checklist			
No,	**Description**	**OK?**	**Date**
1	Read operation manual completely.		
2	Machine layout, location of components, checking of engine oil levels.		
3	Fuel system, refueling procedure.		
4	Operation of controls (machine not running).		
5	Safety controls, safety stop switch operation.		
6	Emergency stop procedures.		
7	Machine transport and storage.		

The EM-70SLF plaster and mortar mixer is equipped with a number of safety decals. These decals are provided for operator safety and maintenance information. Figure 1 below illustrates these decals as they appear on the machine. Should any of these decals become unreadable, replacements can be obtained from your dealer or the MQ Parts Department.

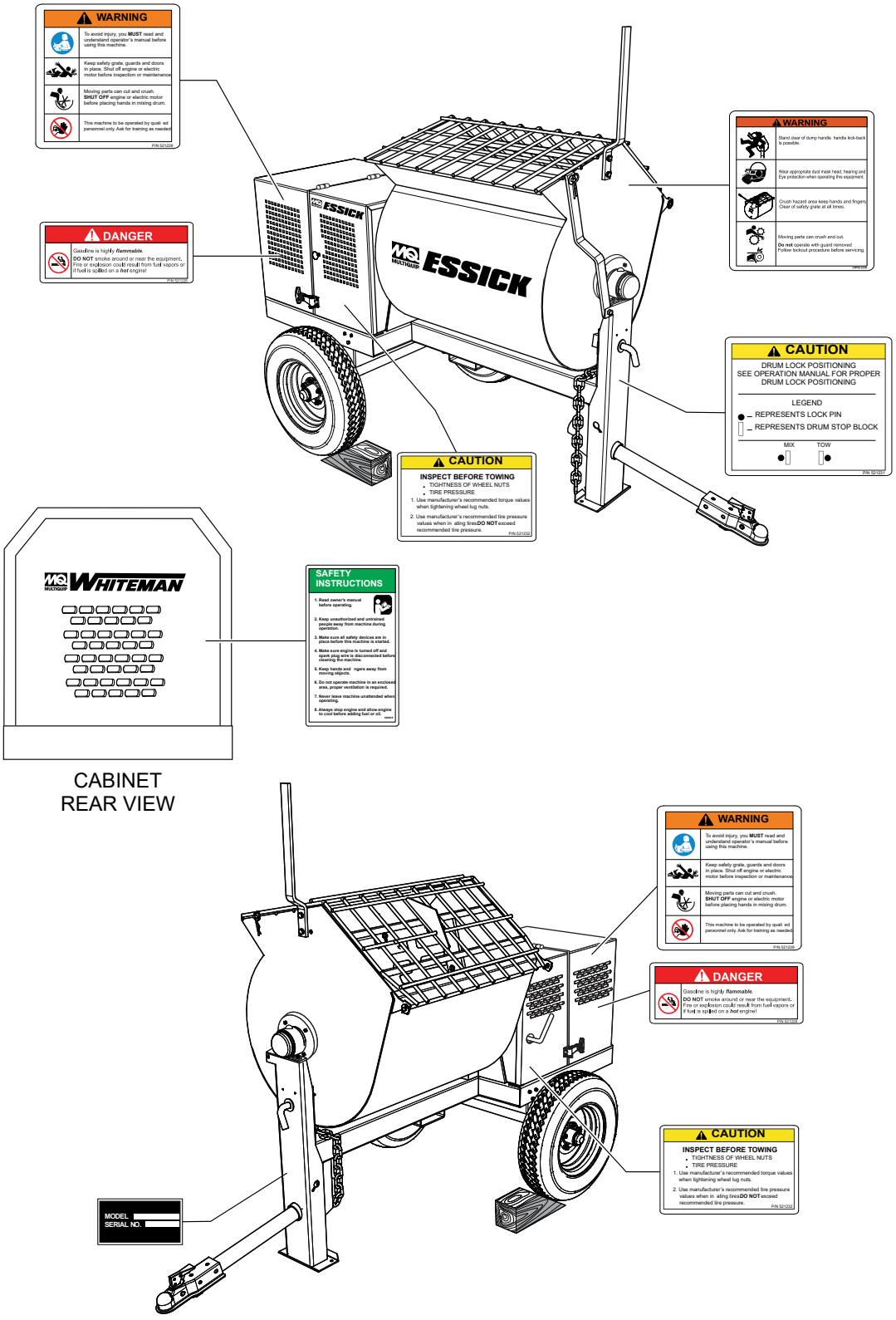

Figure 1. Nameplate and Safety Decals

Do not operate or service the equipment before reading the entire manual. Safety precautions should be followed at all times when operating this equipment. Failure to read and understand the safety messages and operating instructions could result in injury to yourself and others.



SAFETY MESSAGES

The four safety messages shown below will inform you about potential hazards that could injure you or others. The safety messages specifically address the level of exposure to the operator and are preceded by one of four words: **DANGER, WARNING, CAUTION** or **NOTICE.**

SAFETY SYMBOLS

DANGER

Indicates a hazardous situation which, if not avoided, **WILL** result in **DEATH** or **SERIOUS INJURY.**

WARNING

Indicates a hazardous situation which, if not avoided, **COULD** result in **DEATH** or **SERIOUS INJURY.**

CAUTION

Indicates a hazardous situation which, if not avoided, **COULD** result in **MINOR** or **MODERATE INJURY.**

NOTICE

Addresses practices not related to personal injury.

Potential hazards associated with the operation of this equipment will be referenced with hazard symbols which may appear throughout this manual in conjunction with safety messages.

Symbol	Safety Hazard
	Lethal exhaust gas hazards
	Explosive fuel hazards
	Burn hazards
 	Rotating parts hazards

GENERAL SAFETY

⚠ CAUTION

- **NEVER** operate this equipment without proper protective clothing, shatterproof glasses, respiratory protection, hearing protection, steel-toed boots and other protective devices required by the job or city and state regulations.



- Avoid wearing jewelry or loose-fitting clothes that may snag on the controls or moving parts as this can cause serious injury.
- **NEVER** operate this equipment when not feeling well due to fatigue, illness or when on medication.



- **NEVER** operate this equipment under the influence of drugs or alcohol.



- **ALWAYS** clear the work area of any debris, tools, etc. that would constitute a hazard while the equipment is in operation.
- **ALWAYS** check the equipment for loosened threads or bolts before starting.
- **DO NOT** use the equipment for any purpose other than its intended purposes or applications.

NOTICE

- This equipment should only be operated by trained and qualified personnel 18 years of age or older.
- Whenever necessary, replace nameplate, operation and safety decals when they become difficult to read.
- Manufacturer does not assume responsibility for any accident due to equipment modifications. Unauthorized equipment modification will void all warranties.
- **NEVER** use accessories or attachments that are not recommended by Multiquip for this equipment. Damage to the equipment and/or injury to the user may result.
- **ALWAYS** know the location of the nearest **fire extinguisher.**



- **ALWAYS** know the location of the nearest **first aid kit.**



- **ALWAYS** know the location of the nearest phone or **keep a phone on the job site.** Also, know the phone numbers of the nearest **ambulance, doctor** and **fire department.** This information will be invaluable in the case of an emergency.

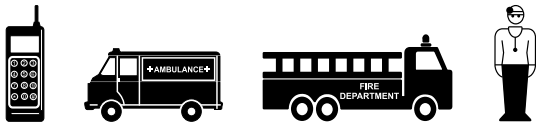

MIXER SAFETY

⚠ DANGER

- **NEVER** operate the equipment in an explosive atmosphere or near combustible materials. An explosion or fire could result causing **severe bodily harm or even death.**



- **DO NOT** mix **flammable** or **explosive** substances.

⚠ WARNING



- **NEVER** place your hands inside the drum while starting or operating this equipment.
- **NEVER** disconnect any **emergency or safety devices.** These devices are intended for operator safety. Disconnection of these devices can cause **severe injury, bodily harm or even death**. Disconnection of any of these devices will void all warranties.
- Before operating the mixer, ensure that the safety grate is in position and correctly fitted.

⚠ CAUTION

- **NEVER** lubricate components or attempt service on a running machine.

NOTICE

- **ALWAYS** keep the machine in proper running condition.
- **ALWAYS** ensure the mixer is on level ground before mixing.
- Fix damage to the machine and replace any broken parts immediately.
- **ALWAYS** store equipment properly when it is not being used. Equipment should be stored in a clean, dry location out of the reach of children and unauthorized personnel.
- **ALWAYS** make sure the mixer is clean of dried materials. **DO NOT** allow material to build up inside the drum. Keep the drum, frame and wheels clean. Excess debris can fall off on the highway and/or build up on the frame and wheels, creating an unbalanced condition leading to premature metal fatigue.

ENGINE SAFETY

⚠ DANGER

- Engine fuel exhaust gases contain poisonous carbon monoxide. This gas is colorless and odorless, and can cause death if inhaled.
- The engine of this equipment requires an adequate free flow of cooling air. **NEVER** operate this equipment in any enclosed or narrow area where the free flow of air is restricted. If the air flow is restricted it will cause injury to people and property and serious damage to the equipment or engine.

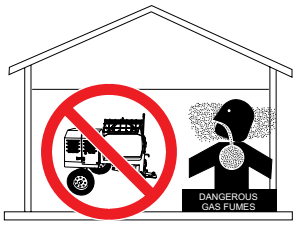

⚠ WARNING

- **DO NOT** place hands or fingers inside the engine compartment when the engine is running.
- **NEVER** operate the engine with heat shields or guards removed.
- Keep fingers, hands, hair and clothing away from all moving parts to prevent injury.



- **DO NOT** remove the engine oil drain plug while the engine is hot. Hot oil will gush out of the oil tank and severely scald any persons in the general area of the mixer.

⚠ CAUTION

- **NEVER** touch the hot exhaust manifold, muffler or cylinder. Allow these parts to cool before servicing the equipment.



- Make certain the operator knows how to and is capable of turning the engine **OFF** in case of an emergency.

NOTICE

- **NEVER** run the engine without an air filter or with a dirty air filter. Severe engine damage may occur. Service the air filter frequently to prevent engine malfunction.
- **NEVER** tamper with the factory settings of the engine or engine governor. Damage to the engine or equipment can result if operating in speed ranges above the maximum allowable.



FUEL SAFETY

⚠ DANGER

- **DO NOT** start the engine near spilled fuel or combustible fluids. Fuel is **extremely flammable** and its vapors can cause an **explosion** if ignited.
- **ALWAYS** refuel in a well-ventilated area, away from sparks and open flames.
- **ALWAYS** use extreme caution when working with **flammable** liquids.
- **DO NOT** fill the fuel tank while the engine is running or hot.
- **DO NOT** overfill the tank, since spilled fuel can ignite if it comes into contact with hot engine parts or sparks from the ignition system.
- Store fuel in appropriate containers, in well-ventilated areas and away from sparks and flames.
- **NEVER** use fuel as a cleaning agent.
- **DO NOT** smoke around or near the equipment. **Fire or explosion** could result from fuel vapors or if fuel is spilled on a hot engine.



NOTICE

- **ALWAYS** make certain that the proper power or extension cord has been selected for the job.

TRANSPORTING SAFETY

⚠ CAUTION

- **NEVER** allow any person or animal to stand underneath the equipment while lifting.

NOTICE

- **ALWAYS** make sure forklift forks are inserted as far as possible into the pockets (if applicable) when lifting the mixer.
- **ALWAYS** shut down the engine before transporting.
- **NEVER** lift the equipment while the engine is running.
- Tighten the fuel tank cap securely and close the fuel cock to prevent fuel from spilling.
- **DO NOT** lift the machine to unnecessary heights.
- **ALWAYS** tie down equipment during transport by securing the equipment with rope.
- **NEVER** tip the engine to extreme angles during lifting as this may cause oil to gravitate into the cylinder head, making the engine difficult to start.

TOWING SAFETY

⚠ CAUTION

- In addition to meeting ***Department of Transportation (DOT) safety towing regulations***, check your local county or state safety towing regulations before towing the mixer.
- In order to reduce the possibility of an accident while transporting the mixer on public roads, **ALWAYS** make sure the towing vehicle is mechanically sound and in good operating condition.
- **ALWAYS** shut down the engine before transporting and place the fuel valve in the **OFF** position.
- **ALWAYS** inspect the hitch and coupling for wear. **NEVER** tow a mixer with defective hitches, couplings, chains, etc.
- Check the tire air pressure on both towing vehicle and mixer. ***Mixer tires should be inflated to 50 psi cold***. Also check the tire tread wear on the vehicle and mixer.
- **ALWAYS** make sure the mixer is equipped with a **safety chain.**
- **ALWAYS** properly attach the mixer's safety chains to the towing vehicle.
- The maximum speed for highway towing is **55 MPH** unless posted otherwise. Recommended off-road towing is not to exceed **15 MPH** or less depending on type of terrain.
- Avoid sudden stops and starts. These can cause skidding or jackknifing. Smooth, gradual starts and stops will improve towing.
- Avoid sharp turns to prevent rolling.
- The mixer should be adjusted to a level position at all times when towing.
- Raise and lock the mixer drum in the **UP** position when towing.
- Place ***chock blocks*** underneath the mixer wheels to prevent **rolling** while parked.

ENVIRONMENTAL SAFETY/DECOMMISSIONING

NOTICE

Decommissioning is a controlled process used to safely retire a piece of equipment that is no longer serviceable. If the equipment poses an unacceptable and unrepairable safety risk due to wear or damage or is no longer cost effective to maintain (beyond life-cycle reliability) and is to be decommissioned (demolition and dismantlement), follow the rules below.

- **DO NOT** pour waste or oil directly onto the ground, down a drain or into any water source.
- Contact your country's Department of Public Works or a recycling agency in your area and arrange for proper disposal of any electrical components, waste or oil associated with this equipment.



- When the life cycle of this equipment is over, remove the battery (if equipped) and bring it to an appropriate facility for lead reclamation. Use safety precautions when handling batteries that contain sulfuric acid.
- When the life cycle of this equipment is over, it is recommended that the mixer frame and all other metal parts be sent to a recycling center.

Metal recycling involves the collection of metal from discarded products and its transformation into raw materials to use in manufacturing a new product.

Recyclers and manufacturers alike promote the process of recycling metal. Using a metal recycling center promotes energy cost savings.

EMISSIONS INFORMATION

NOTICE

The gasoline engine used in this equipment has been designed to reduce harmful levels of carbon monoxide (CO), hydrocarbons (HC) and nitrogen oxides (NOx) contained in gasoline exhaust emissions.

This engine has been certified to meet US EPA evaporative emissions requirements in the installed configuration.

Attempting to modify or make adjustments to the engine emission system by unauthorized personnel without proper training could damage the equipment or create an unsafe condition.

Additionally, modifying the fuel system may adversely affect evaporative emissions, resulting in fines or other penalties.

Emission Control Label

The emission control label is an integral part of the emission system and is strictly controlled by regulation(s).

The label must remain with the engine for its entire life.

If a replacement emission label is needed, please contact your authorized engine distributor.

TOWING SAFETY PRECAUTIONS

NOTICE

Check with your county or state towing safety regulations department before towing your mixer.

To reduce the possibility of an accident while transporting the mixer on public roads, **ALWAYS** make sure that the mixer towing components and the towing vehicle are in good operating condition and both units are mechanically sound.

The following recommendations should be used when towing the mixer:

- Make sure that the hitch and coupling of the towing vehicle are rated equal to or greater than the trailer gross vehicle weight rating (GVWR).
- **ALWAYS** inspect the hitch and coupling for wear. **NEVER** tow the mixer with defective hitches, couplings, chains etc.
- **CHECK** the tire air pressure on both the towing vehicle and the trailer. Check the tire tread wear on both vehicles.
- **ALWAYS** make sure the mixer is equipped with a **safety chain**.
- **ALWAYS** attach the trailer's safety chain to the frame of the towing vehicle.
- **ALWAYS** make sure that the towing vehicle's directional, backup, and brake lights are working properly.
- Remember that in most cases the maximum speed for highway towing is **55 mph** unless otherwise posted. Check your local, state and county vehicle towing requirements before towing your mixer. Recommended off-road towing speed is **15 mph** or less depending on the type of terrain.
- If the mixer is disconnected from the towing vehicle while parked, place **chock blocks** underneath the wheels to prevent **rolling**.
- Inflate tires to the correct pressure and inspect tires for damage or excessive wear. See Table 8 for tire wear troubleshooting.
- When towing of the mixer is required, place the drum in the **UP** (mouth facing upwards) position.
- Avoid sharp turns to prevent rolling.
- **ALWAYS** make sure the fuel valve lever is in the **OFF** position (gasoline models only).
- Check the wheel mounting lug nuts with a torque wrench. Torque the lug nuts as described in the ***Maintenance*** section of this manual.
- Check the tightness of the axle mounting hardware. Torque the suspension hardware as described in the ***Maintenance*** section of this manual.
- Avoid sudden stops and starts. These can cause skidding or jackknifing. Smooth, gradual starts and stops will improve gas mileage.

NOTICE

If the mixer tow bar is deformed or damaged, replace the entire tow bar. **NEVER** tow the mixer with a defective tow bar. The possibility exists of the trailer separating from the towing vehicle.

NOTICE

DO NOT tow or lift the mixer unless the mixing drum is completely empty.

NOTICE

To prevent the drum from tipping, **ALWAYS** make sure the drum latch pin (Figure 2) is placed to the **RIGHT** (when viewing the mixer from the tow bar end) of the drum stop block, which is welded to the front of the drum. Make sure the latch pin is fully engaged (locked). This will prevent the drum from rotating during transport.

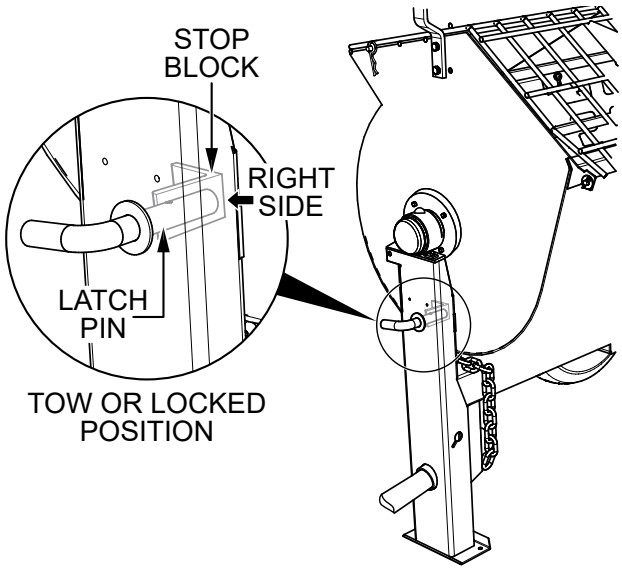

Figure 2. Drum Latch Pin (Tow or Locked Position)

TOW BAR TO VEHICLE (COUPLER ONLY)

1. Check the vehicle hitch ball and the mixer's coupler for signs of wear or damage. Replace any parts that are worn or damaged before towing.
2. Use only a 2-inch ball diameter for the towing vehicle. This will match the mixer's 2-inch coupler. Use of any other ball diameter will create an extremely dangerous condition which can result in ball failure or separation of the coupler and ball.
3. After the tow bar has been connected to the mixer (Figure 3–Figure 6), securely attach the mixer's coupler to the hitch ball on the towing vehicle. Make sure the lock lever is in the **DOWN** (locked) position and the safety pin is inserted.

MIXER TOW BAR VEHICLE (PINTLE AND LOOP)

1. Make sure the bumper on the towing vehicle is equipped to handle either a pintle- or loop-type tow bar configuration.
2. After the tow bar has been connected to the mixer (Figure 3–Figure 6), secure either type of tow bar to the towing vehicle, following state and county towing regulations.
3. As a minimum, use a 1/2-inch bolt and nyloc nut (grade 5) when securing either tow bar to the towing vehicle.

⚠ CAUTION

NEVER tow the mixer with the safety chain removed. The safety chain is intended to prevent complete separation of the mixer from the towing vehicle in the event of a tow bar failure.

TOW BAR TO MIXER CONNECTION

1. Insert the tow bar (Figure 3) through the round opening at the bottom of the mixer stand.

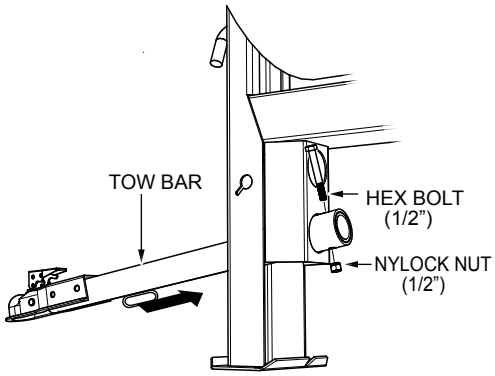

Figure 3. Insert Tow Bar

2. Align the hole on the tow bar with the hole on the mixer frame and insert the 1/2-inch bolt (Figure 3) through the tow bar and frame. Secure the tow bar to the frame with the 1/2-inch nyloc nut. Tighten to 40 lbf·ft.
3. Route the safety chain through the holes (Figure 4) located on each side of the mixer stand just above the tow bar.

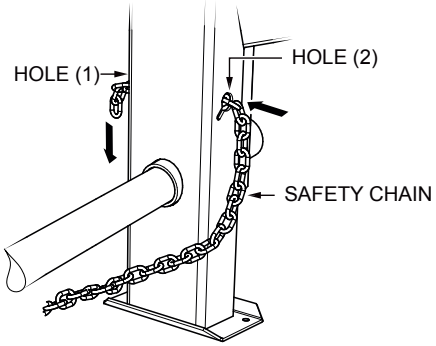

Figure 4. Attach Safety Chains to Mixer Stand

4. Loop (cross) the safety chain and place it under the tow bar. Secure the loop with the safety chain connector link. See Figure 5.

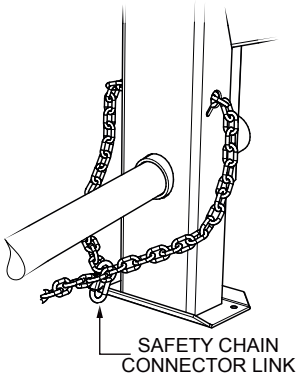

Figure 5. Cross Safety Chain

5. Extend the safety chain along the length of the tow bar and loop it through the tow bar's connector link (Figure 6). Remove any excess chain slack.

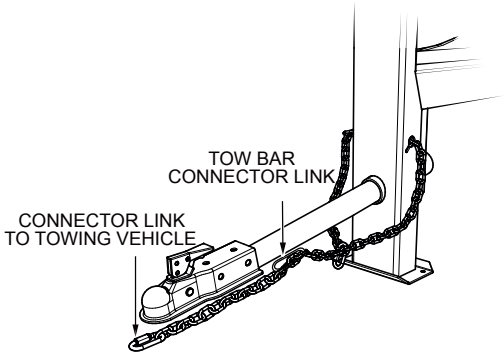

Figure 6. Extend Safety Chain

6. Connect the free end (connector link) of the safety chain to the towing vehicle (Figure 6). It is critical that the length of the chain be properly adjusted to prevent the draw bar and the front of the mixer stand from dropping to the ground (contact) in the event of the draw bar becoming disconnected from the towing vehicle.

⚠ CAUTION

Use a lifting device to lift the tow bar onto the vehicle coupler. If a lifting device is not available, have two persons of similar height lift the tow bar. **DO NOT** attempt to lift by bending forward. Bend hips and knees to squat down to the load, keep it close to your body, and straighten your legs to lift.

Table 1. Mixer Specifications	
Max. Mixing Capacity	7.0 ft.^{3} (198 liters)
Bag Capacity	1.5–2.5 bags
Weight	690 lb. (313 kg)
Drive	V-belt/gear
Dump Action	Manual

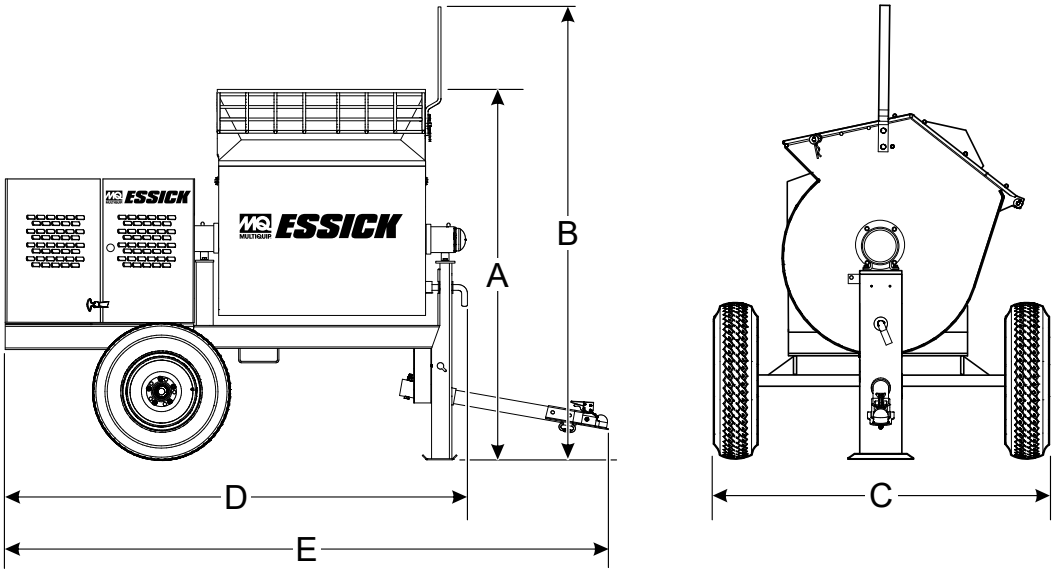

Figure 7. Mixer Dimensions

Table 2. Mixer Dimensions	
Reference Letter/Parameter	**Dimensions in. (cm)**
(A) Height – Grate	56.0 (142)
(B) Height – Drum Handle	67.0 (170)
(C) Width – Wheelbase	50.0 (127)
(D) Length – Frame/Jack Stand	67.0 (170)
(E) Length – Frame/Tow Bar	92.0 (234)

Table 3. Noise And Vibration Emissions	
Guaranteed ISO 11201:2010 Based Sound Pressure Level at Operator Station in dB(A)	TBD
Guaranteed ISO 3744:2010 Based Sound Power Level in dB(A)	TBD

NOTES:

1. *Sound pressure and power levels are 'A'-weighted measures per ISO 226:2003 (ANSI S1.4-1981). They are measured with the operating conditions of the machine which generate the most repeatable but highest values of the sound levels. Under normal circumstances, the sound level will vary depending on the condition of the material being worked upon.*
2. *The vibration level indicated is the vector sum of the RMS (root mean square) values of amplitudes on each axis, standardized to an 8-hour exposure period, and obtained using operating conditions of the machine that generate the most repeatable but highest values in accordance with the applicable standards for the machine.*

Table 4. Engine Specifications	
Model	**MPower 177F-BH**
Type	4 stroke, OHV, single cylinder tilt 25°
Bore × Stroke	3.00 in. × 2.20 in. (76 mm × 55 mm)
Displacement	16.48 in.^{3} (270 cm^3)
Max. Output	9.0 hp (6.7 kW) @ 3,600 rpm
Torque	93 Nm /68.5 lbf-ft @ 420 rpm
Fuel Tank Capacity	1.58 US gallons (5.3 liters)
Fuel Type	Unleaded
Lube Oil Capacity	1.05 US quart (6.32 liters)
Lubricating System	Splash
Air Cleaner	Dual Element
Speed Control Method	Centrifugal Flyweight Type
Starting Method	Recoil
Ignition System	Thermal Ignition Control
Spark Plug Type	BPR6ES NGK
Spark Plug Gap	0.027 - 0.031 in. (0.7 - 0.8 mm)
Crankshaft Rotation	Counterclockwise
Cooling System	Forced Air
Dimensions (L × W × H)	16.9 × 16.5 × 16.1 in. (429 × 419 × 408 mm)
Dry Net Weight	64.0 lb. (29.0 kg)

APPLICATION

This mixer is intended for the mixing of **plaster and mortar only**. The mixer must be used for its intended purpose and is **not suitable for the mixing of flammable or explosive substances**. The mixer must not be used in an explosive atmosphere.

The drum capacity of this mixer is 7 cubic feet (198 liters) with a batch capacity of 1.5 to 2.5 bags. The mixer has been factory tested and is shipped completely assembled, ready for use.

POWER PLANT

The mixer is powered by a MPower 177F-BH air-cooled, 4-stroke OHV, single cylinder, gasoline engine. Refer to Table 4 for engine specifications.

HARDWARE

Check all hardware on the mixer before starting. Periodically inspect all hardware. Loose hardware can contribute to early component failure and poor performance. Use Table 5 as general guideline when the torquing of mixer hardware is required. Remember to keep all mixer hardware components tight.

Table 5. Hardware Torque Recommendations

Hardware Diameter	Torque (lbf·ft)
5/16" x 18	14
3/8" x 16	24
3/8" x 24	37
1/2" x 13	39
1/2" x 13 (Grade 8)	90

ENGINE MAINTENANCE

For basic engine maintenance, refer to the ***Engine Maintenance*** section in this manual. For more detailed engine maintenance, refer to the MPower engine owner's manual provided with the engine.

OPTIONAL TOW BARS

The mixer can be configured for use with various types of tow bars (ball, loop or pin). See Figure 8. Contact the MQ sales department for the desired tow bar.

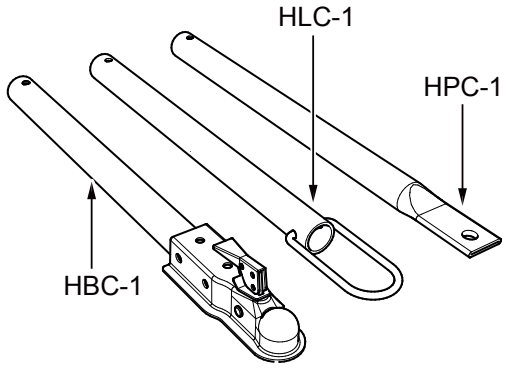

Figure 8. Optional Tow Bars

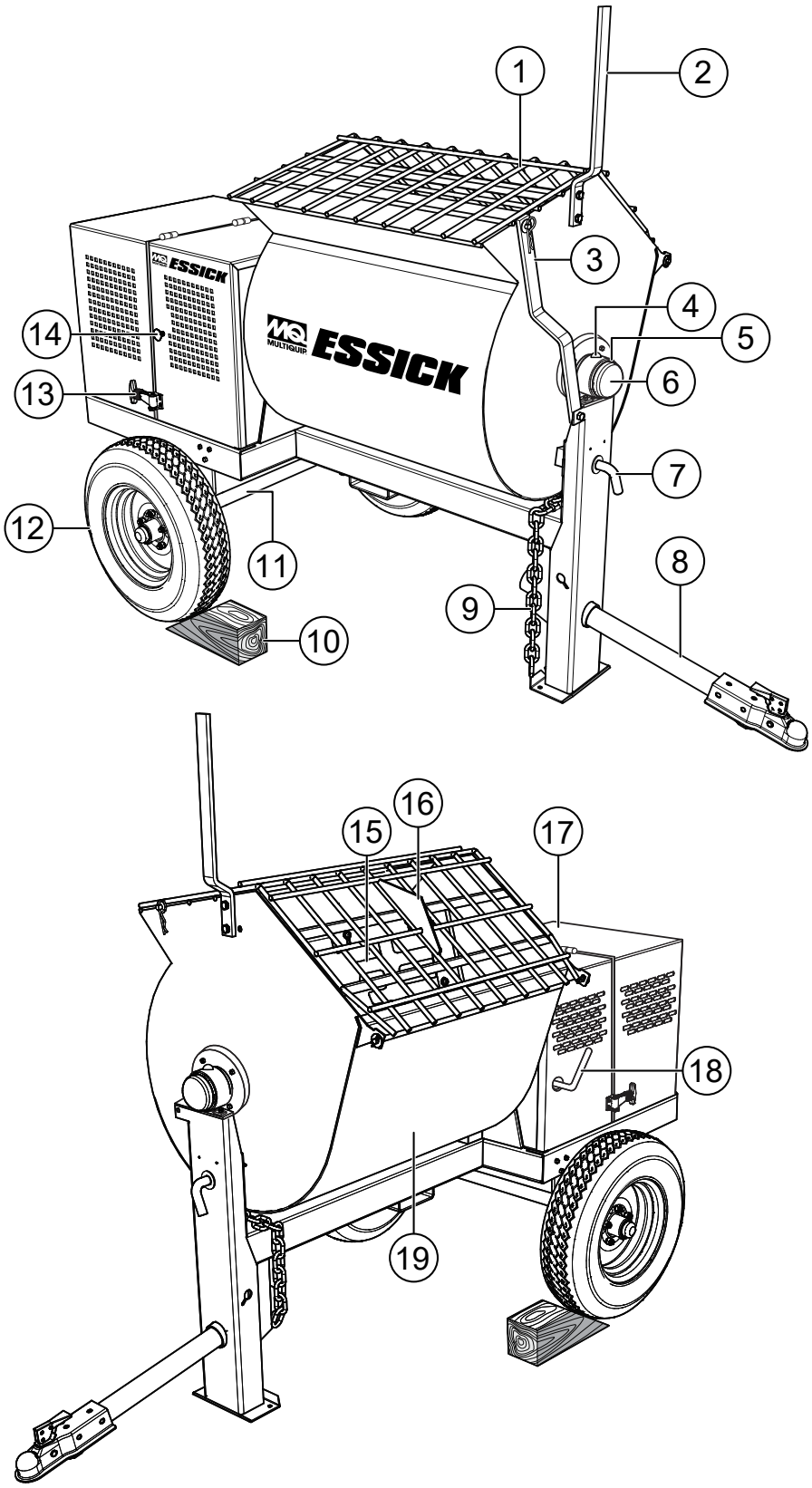

Figure 9. Mixer Components

1. **Safety Grill** — Provided for operator safety. This safety grill is designed to keep hands and solid objects out of the mixing drum when in use. This grill should be closed at all times when the mixer is in use. **DO NOT** remove the grill or grill opening bar. Keep the grill clean by washing it daily.
2. **Dump Handle** — Pull this handle downward to dump the contents of the drum. Push the handle upward to return the drum to its vertical position.
3. **Safety Grill Lock Handle** — To prevent injury to hands and arms, the safety grill should **ALWAYS** be locked when the mixing of plaster or mortar is required. The safety grill should also be locked when transporting the mixer. The safety grill should only be unlocked when cleaning of the blades and drum is required.
4. **Pivot Point/Zerk Fitting** — There is a Zerk grease fitting on each end of the mixing drum. These fittings lubricate the dumping mechanism. Lubricate both fittings at least once a month or when the drum becomes difficult to position.
5. **Drum Head Seal/Zerk Fitting** — There is a Zerk grease fitting on each end of the mixing drum. Lubricate both fittings (drum head seals) every 40 hours of operation.
6. **Drum Bearing** — There is a sealed bearing on each end of the mixing drum. Bearings are packed and sealed at the factory and require no further maintenance.
7. **Drum Lock Pin** — Place the pin in the locked position before towing. Prevents the drum from tipping.
8. **Tow Bar/Coupler** — This mixer uses various towing bars. Refer to the ***Frame Assembly*** drawing and parts list in the mixer parts manual to determine which tow bar meets your requirements.
9. **Safety Chain** — This mixer uses a 3/16-inch-thick, 72-inch-long, zinc-plated safety chain. **ALWAYS** connect the safety chain when towing.
10. **Chock Blocks (Option)** — When the mixer is not connected to the towing vehicle, place these blocks (not included as part of the mixer package) under each mixer wheel to prevent rolling.
11. **Rigid Suspension** — This mixer uses a rigid-type suspension. Check the mounting hardware for bolt hole elongation and tightness. See the ***Maintenance*** section of this manual for recommended maintenance.
12. **Tires** — The tire ply (layers) number is rated in letters. This mixer uses 13-inch, 4-ply tires. Replace with only recommended type tires.
13. **Cabinet/Latch** — Encloses the engine or electric motor. **NEVER** run the mixer with the cabinet open. Use the latches to secure the engine compartment cabinet.
14. **Engine Emergency Stop Switch** — This pushbutton switch is located on the side of the mixer frame. When activated it will shut down the engine. Pull this switch outward when starting the engine.
15. **Mixing Paddles** — This mixer uses rubber mixing paddles for the mixing of plaster and mortar. **ALWAYS** clean the paddles after each use.
16. **Bag Cutter** — This feature allows mixing bags to be opened easily, therefore allowing the contents of the bag to fall directly into the mixing drum.
17. **Engine Cover** — Lift this cover to gain access to the engine or electric motor.
18. **Belt Slip Lever** — Placing this lever in the mix position will tension V-belts which will enable the paddle shaft to rotate.
19. **Mixing Drum** — Drum capacity is 7.0 cubic feet (198 liters). Mixing materials such as mortar and plaster are to be placed into this drum for mixing. **ALWAYS** clean the drum after each use. **DO NOT** use this mixing drum for the mixing of **volatile or hot liquids**.

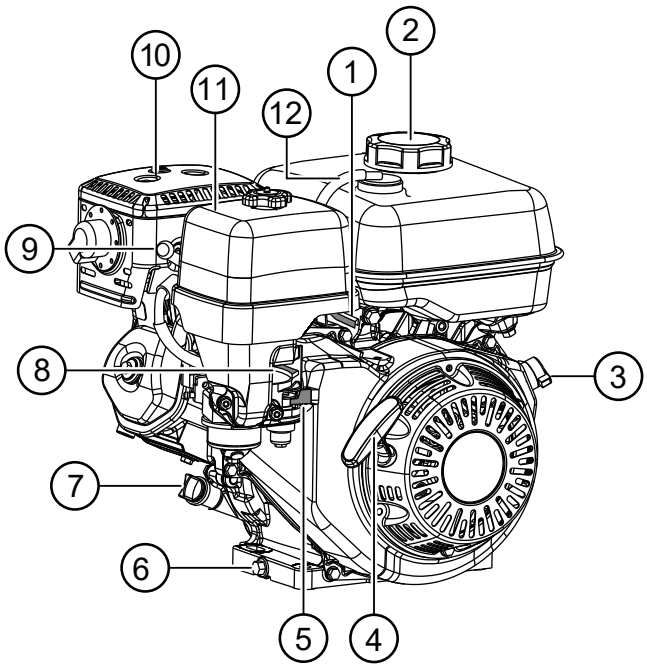

Figure 10. Engine Components

INITIAL SERVICING

The engine (Figure 10) must be checked for proper lubrication and filled with fuel prior to operation. Refer to the manufacturer's engine manual for instructions and details on operation and servicing.

1. **Throttle Lever** — Adjusts engine RPM speed.
2. **Fuel Filler Cap/Fuel Tank** — Remove this cap to add unleaded gasoline to the fuel tank. Refer to Table 4 for fuel tank capacity. Make sure the cap is tightened securely. **DO NOT** overfill.

⚠ DANGER



Add fuel to the tank only when the engine is stopped and has had an opportunity to cool down. In the event of a fuel spill, **DO NOT** attempt to start the engine until the fuel residue has been completely wiped up and the area surrounding the engine is dry.

3. **Engine ON/OFF Switch** — **ON** position permits engine starting, **OFF** position stops engine operation.
4. **Recoil Starter (pull rope)** — Manual starting method. Pull the starter grip slowly until resistance is felt, then pull briskly and smoothly to start the engine.
5. **Fuel Valve Lever** — **OPEN** to let fuel flow, **CLOSE** to stop the flow of fuel.
6. **Oil Drain Bolt** — Remove this bolt to drain oil from the engine's crankcase.
7. **Dipstick/Oil Filler Cap** — Remove this cap to determine if engine oil is low. Add oil through this filler port as recommended in Table 6.
8. **Choke Lever** — Used in the starting of a cold engine, or in cold weather conditions. The choke enriches the fuel mixture.
9. **Spark Plug** — Provides spark to the ignition system. Set the spark plug gap according to the engine manufacturer's instructions. Clean the spark plug once a week.
10. **Muffler** — Reduces noise and emissions. **NEVER** touch when **hot**!
11. **Air Cleaner** — Prevents dirt and other debris from entering the fuel system. Remove the wing nut on top of the air filter canister to gain access to the filter element.
12. **Vapor Recovery Valve** — Removes vapor from the fuel tank. Part of the EVAP system.

NOTICE

Operating the engine without an air filter, with a damaged air filter, or with a filter in need of replacement will allow dirt to enter the engine, causing rapid engine wear.

BEFORE STARTING

1. Read all safety instructions at the beginning of this manual.
2. Clean the unit, removing dirt and dust—particularly the engine cooling air inlet, carburetor and air cleaner.
3. Check the air filter for dirt and dust. Replace the air filter with a new one if it is excessively dirty.
4. Check the carburetor for external dirt and dust. Clean with dry compressed air.
5. Check fastening nuts and bolts for tightness.

⚠ CAUTION



ALWAYS wear approved eye and hearing protection while operating the mixer.

⚠ CAUTION



NEVER place hands or feet inside the engine guard cover while the engine is running. **ALWAYS** shut the engine down before performing any kind of maintenance service on the mixer.

ENGINE OIL CHECK

1. Place the unit on secure, level ground with the engine stopped.
2. Remove the oil dipstick from the engine oil filler hole (Figure 11) and wipe it clean.

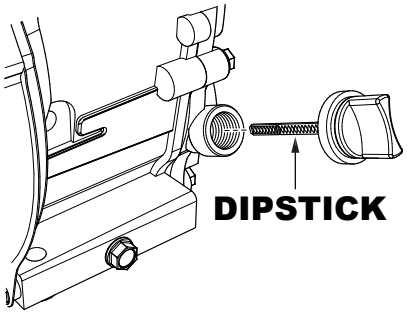

Figure 11. Engine Oil Dipstick

3. Insert and remove the dipstick without screwing it into the filler neck. Check the oil level shown on the dipstick.
4. If the oil level (Figure 12) is low, fill to the edge of the oil filler hole with the recommended oil type (Table 6). Refer to Table 4 for engine oil capacity.

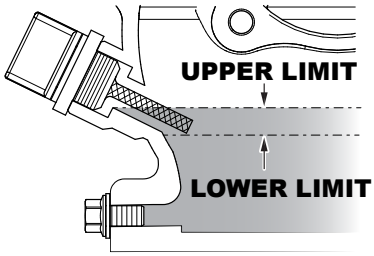

Figure 12. Engine Oil Level

Table 6. Engine Oil Type

Season	Temperature	Oil Type
Summer	25°C or higher	SAE 10W-30
Spring/Fall	25°C–10°C	SAE 10W-30/20
Winter	0°C or lower	SAE 10W-10

NOTICE

Refer to the engine manufacturer's manual for specific service instructions.

FUEL CHECK

⚠ DANGER



If your mixer has a gasoline engine, determine if engine fuel is low. If fuel is low, remove the fuel filler cap and fill with **unleaded gasoline**. Motor fuels are **highly flammable** and can be dangerous if mishandled. **NEVER** smoke while refueling. **NEVER** attempt to refuel the mixer while the engine is **hot or running**.

1. Remove the gasoline cap located on top of the fuel tank.
2. Visually inspect the fuel level. If fuel is low, replenish with unleaded gasoline.
3. When refueling, be sure to use a strainer for filtration. **DO NOT** top off fuel. Wipe up any spilled fuel immediately.

TIRES

Check for **worn or defective** tires (Figure 13). Replace any defective or worn tires immediately.

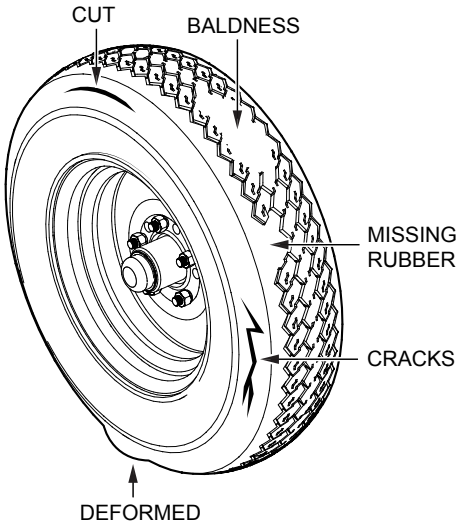

Figure 13. Tire Wear

PADDLE BLADE CHECK

Check for **worn or defective** paddle blades (Figure 14). Make sure that all blades are adjusted properly. Refer to the ***Paddle Blade Adjustment*** procedure in this manual (Figure 16). Replace all defective or damaged blades immediately.

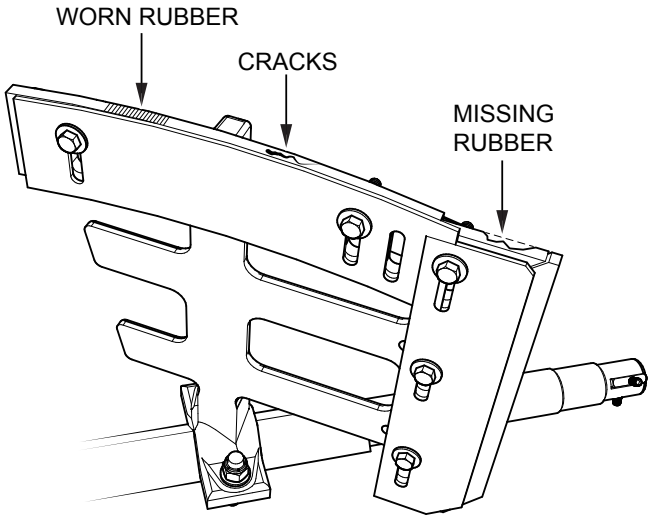

Figure 14. Worn Paddle Blade

EMERGENCY STOP SWITCH

The engine emergency stop switch (Figure 15) should be tested every time the engine is started. See ***Starting the Mixer*** in the ***Operation*** section for more information.

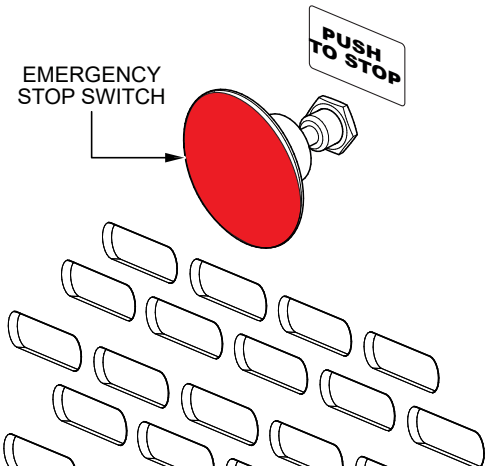

Figure 15. Emergency Stop Switch

CAUTION

NEVER disable or disconnect the **emergency stop switch**. It is provided for operator safety. Injury may result if it is disabled, disconnected or improperly maintained.

PADDLE BLADE ADJUSTMENT

Adjust paddles as shown in Figure 16.

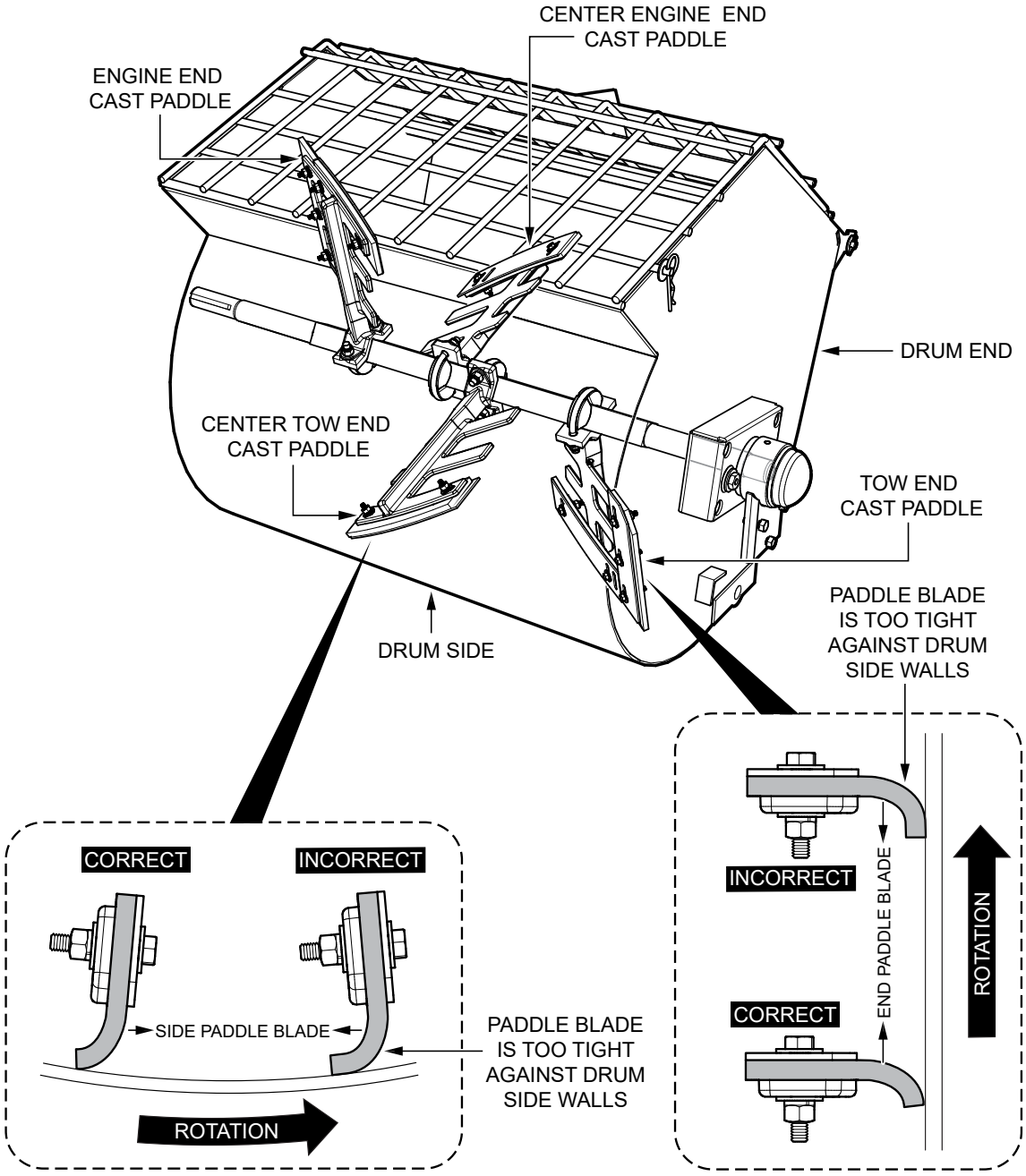

Figure 16. Paddle Blade Adjustment

This section is intended to assist the operator with the initial startup of the mixer. It is extremely important that this section be read carefully before attempting to use the mixer in the field. **DO NOT** use your mixer until this section is thoroughly understood.



WARNING

Failure to understand the operation of the mixer could result in **severe personal injury** or damage to the mixer. Refer to Figure 9 and Figure 10 for component locations.

CAUTION



NEVER operate the mixer in a confined area or enclosed area structure that does not provide an ample free flow of air.

STARTING THE MIXER

1. Place the fuel valve lever (Figure 17) in the **ON** position.

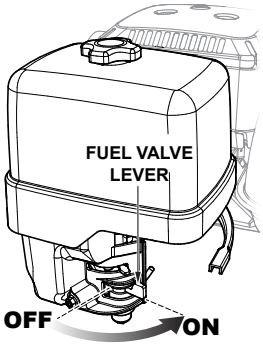

Figure 17. Fuel Valve Lever (ON)

2. If starting a cold engine, place the choke lever (Figure 18) in the **CLOSED** position.

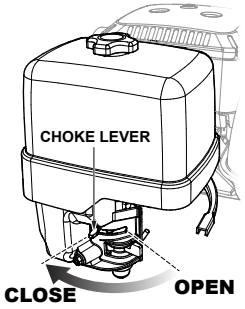

Figure 18. Choke Lever (CLOSED)

3. Move the throttle lever (Figure 19) away from the slow position, about 1/3 of the way toward the fast position.

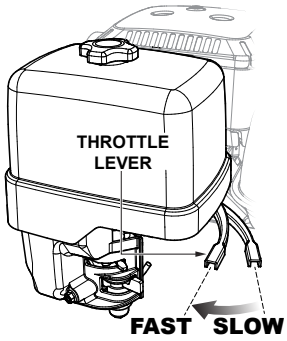

Figure 19. Throttle Lever

4. Locate the emergency stop switch (Figure 20) on the engine cover. Pull this button outward to allow engine starting.

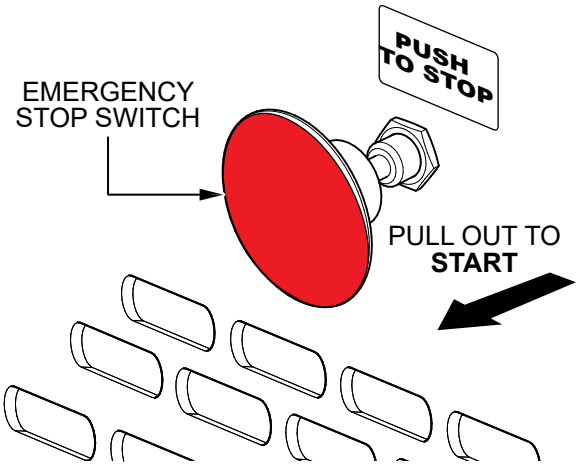

Figure 20. Emergency Stop Switch (START Position)

5. Turn the engine switch (Figure 21) to the **ON** position.

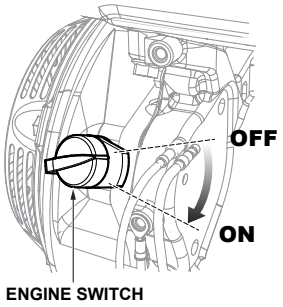

Figure 21. Engine ON/OFF Switch (ON)

6. Place the belt slip lever in the **START/STOP** (disengaged) position. See Figure 22.

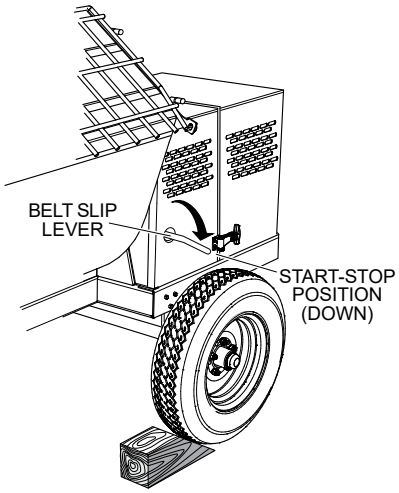

Figure 22. Belt Slip Lever (START/STOP Position)

7. Slowly pull the starter grip (Figure 23) until resistance is felt, then pull briskly and smoothly to start the engine. Gently return the starter grip to its original position.

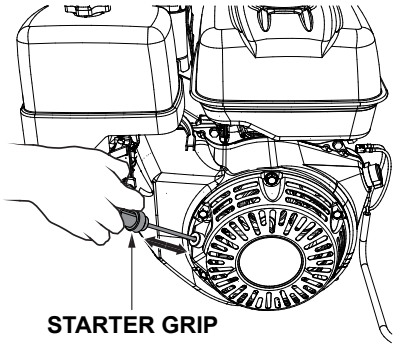

Figure 23. Starter Grip

8. Once the engine has started, the emergency stop switch should be tested for proper operation. Push the emergency stop switch (Figure 24) and observe that the engine has stopped.

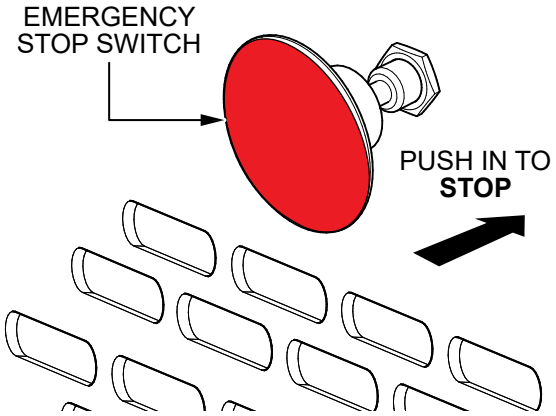

Figure 24. Emergency Stop Switch (STOP)

9. After verifying that the emergency stop switch is working correctly, repeat the engine starting procedure to begin mixing.

MIXING

1. Pull the drum latch pin (Figure 25) and place it on the **left side** (mix position) of the stop block.

> ***NOTICE***
>
> Orientation of the drum stop block is viewed from the tow bar end of the mixer. The stop block is welded to the front side of the drum.

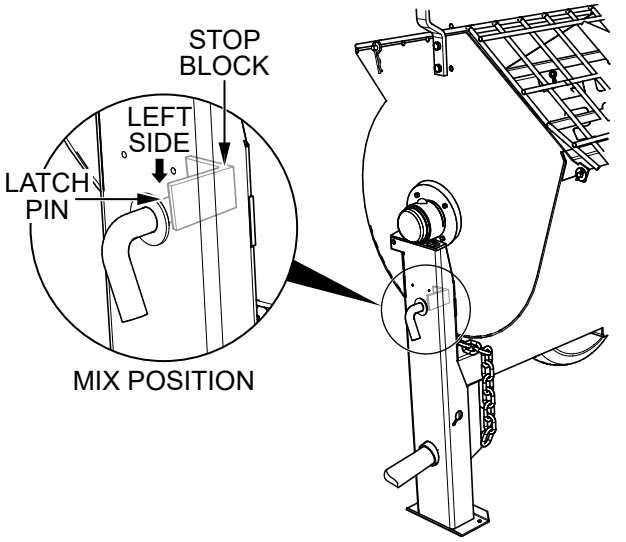

Figure 25. Drum Latch Pin (Mix Position)

2. Once it has been positioned, release the drum latch pin. Make sure the pin is fully engaged (locked). The mixing drum can now be rotated.
3. Place the belt slip lever in the **MIX** (up) position. This will tilt the engine, placing tension on the V-belts and enabling the shaft to rotate. See Figure 26.

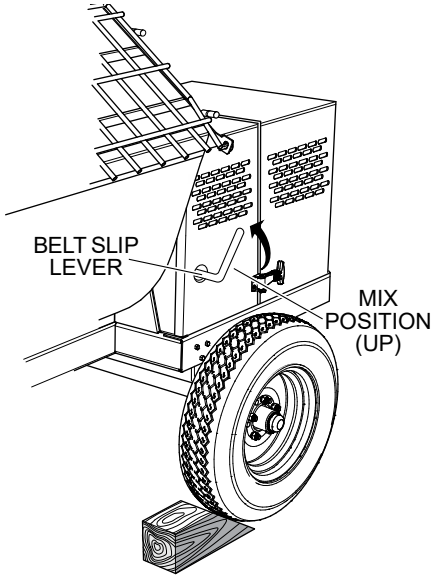

Figure 26. Belt Slip Lever (MIX Position)

4. The paddle shaft inside the drum should be rotating at this time. Add a small amount of water to the mixing drum (Figure 27).

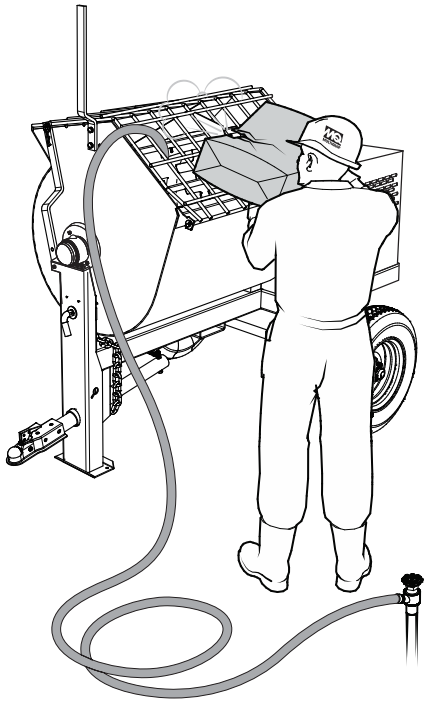

Figure 27. Fill Mixing Drum

5. Lift the mixing bag compound onto the steel safety grate over the **bag cutter** and let the contents fall into the drum (Figure 27). Add more water if desired and mix the compound to the desired consistency.

DUMPING

CAUTION



NEVER stand **in front of** or **behind** the mixing drum while it is being placed in the **dump position**. Stay clear of the mixing drum while it is being positioned.

1. Pull down on the dump handle (Figure 28) to place the drum in the **dump** position.

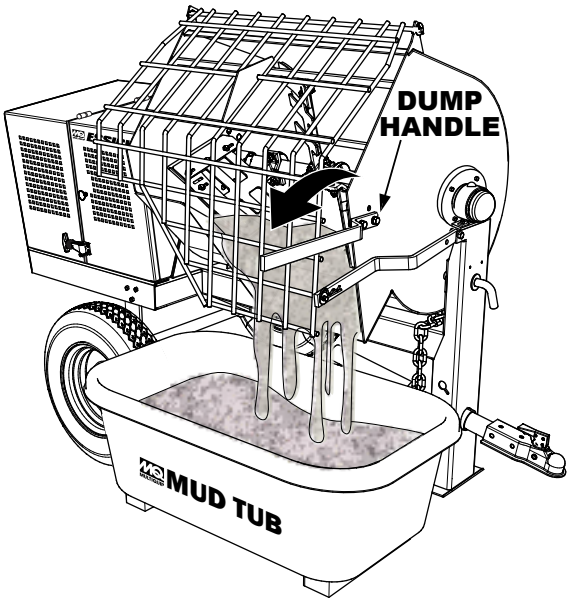

Figure 28. Dump Handle

WARNING

When rotating the mixing drum from the dump position to the upright position, **keep hands clear of the safety grate.** The possibility exists of hands or fingers being crushed.

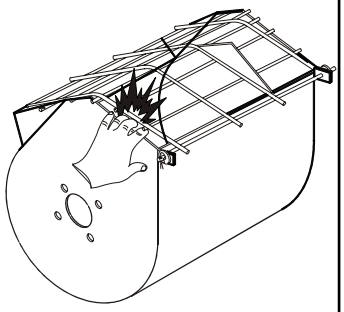

2. Pull upward on the dump handle (Figure 28) to place the drum in the **upright** position.

STOPPING THE MIXER

Normal Shutdown

1. Place the throttle lever in the **IDLE** (slow) position, and let the engine idle for 3–5 minutes. See Figure 29.

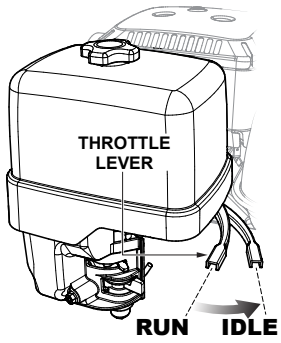

Figure 29. Throttle Lever (IDLE)

2. Turn the engine ON/OFF switch (Figure 30) to the **OFF** position.

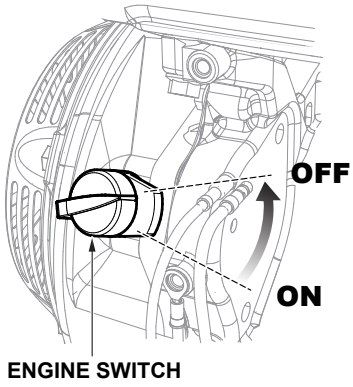

Figure 30. Engine ON/OFF Switch (OFF)

3. Place the fuel valve lever (Figure 31) in the **OFF** position.

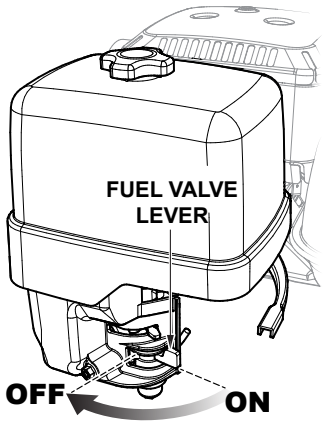

Figure 31. Fuel Valve Lever (OFF)

Emergency Shutdown

In the event of an emergency, ***push*** the emergency stop switch inward to **STOP** the engine (Figure 32).

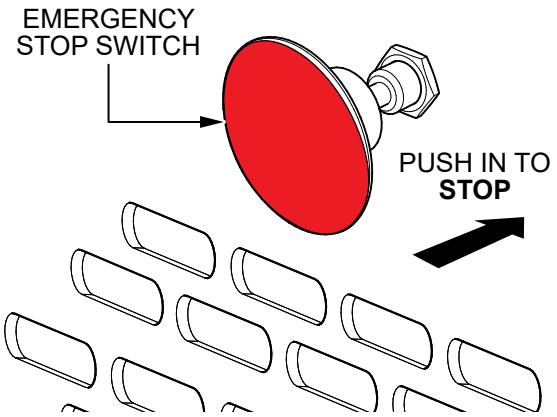

Figure 32. Emergency Stop Switch (STOP)

CLEANING THE MIXER

After each use, thoroughly clean the entire mixer as described in the ***Maintenance*** section of this manual.

NOTICE

ALWAYS make sure the mixer drum is clean and free of debris and dried material. **DO NOT** allow material to build up inside the drum.

Keep the drum, frame and wheels clean. Excess debris (buildup of materials) can lead to premature metal fatigue.

Use Table 7 as a general maintenance guideline when servicing your engine. For more detailed engine maintenance information, refer to the engine owner's manual supplied with your engine.

Table 7. Engine Maintenance Schedule

Description (3)	Operation	Before	First Month or 10 Hrs.	Every 3 Months or 25 Hrs.	Every 6 Months or 50 Hrs.	Every Year or 100 Hrs.	Every 2 Years or 200 Hrs.
Engine Oil	Check	X					
	Change		X				
Air Cleaner	Check	X					
	Change			X (1)			
All Nuts and Bolts	Re-tighten if necessary	X					
Spark Plugs	Check/Clean				X		
	Replace						X
Cooling Fins	Check				X		
Spark Arrester	Clean					X	
Fuel Tank	Clean					X	
Fuel Filter	Check					X	
Idle Speed	Check/Adjust					X (2)	
Valve Clearance	Check/Adjust						X (2)
Fuel Lines	Check	Every 2 years (replace if necessary) (2)					

(1) Service more frequently when used in **dusty** areas.

(2) These items should be serviced by your service dealer, unless you have the proper tools and are mechanically proficient. Refer to the MPower Engine Service Manual for maintenance procedures.

(3) For commercial use, log hours of operation to determine proper maintenance intervals.

MAINTENANCE

Perform scheduled maintenance procedures as defined in Table 7 and below:

DAILY

Thoroughly remove dirt and oil from the engine and control area. Clean or replace the air cleaner elements as necessary. Check and retighten all fasteners as necessary.

WIRING

Inspect the entire mixer for bad or worn electrical wiring or connections. Replace wiring immediately if any wiring or connections are exposed (insulation missing).

FUEL STRAINER (IF EQUIPPED)

1. Thoroughly clean the area around the fuel tank cap.

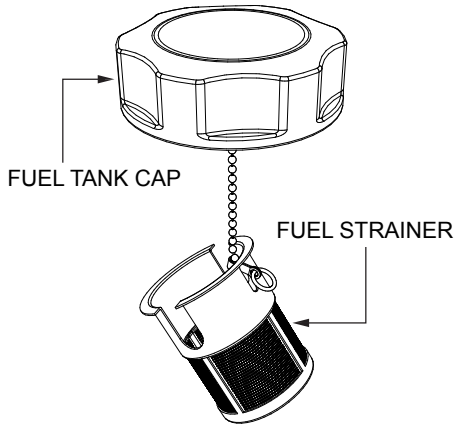

Figure 33. Fuel Strainer

2. Remove the fuel tank cap from the fuel tank.
3. Remove, inspect and clean the fuel strainer (Figure 33) with solvent.

SPARK PLUG

Remove and clean the spark plug (Figure 34). Adjust the spark plug gap to 0.027–0.031 in. (0.7–0.8 mm). This unit has electronic ignition, which requires no adjustments.

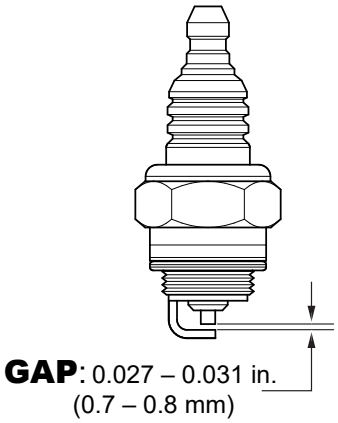

Figure 34. Spark Plug Gap

ENGINE OIL

NOTICE

ALWAYS drain the engine oil while the oil is **warm**.

1. Unscrew the oil filler dipstick (Figure 35) from its holder.

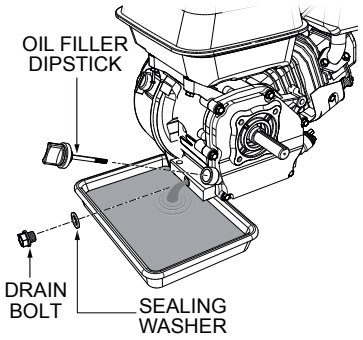

Figure 35. Draining Engine Oil

2. Remove the oil drain bolt and sealing washer and allow the oil to drain into a suitable container (Figure 35).
3. Reinstall the drain bolt with sealing washer and tighten securely.
4. Replace the engine oil with the recommended oil type listed in Table 6. **DO NOT** overfill. See Table 4 for engine oil capacity.

ENGINE AIR CLEANER

1. Remove the air cleaner cover and foam filter element as shown in Figure 36.

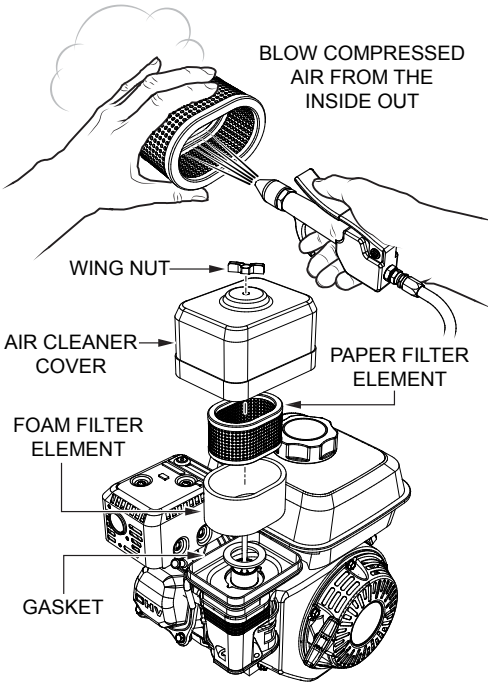

Figure 36. Engine Air Cleaner

2. To remove dirt, tap the paper filter element (Figure 36) several times on a hard surface, or blow compressed air not exceeding 30 psi (207 kPa, 2.1 kgf/cm²) through the filter element from the air cleaner case side. **NEVER** brush off dirt. Brushing will force dirt into the fibers. Replace the paper filter element if it is excessively dirty.
3. Clean the foam element in warm, soapy water or nonflammable solvent. Rinse and dry thoroughly. Dip the element in clean engine oil and completely squeeze out the excess oil from the element before installing.

⚠ DANGER

To avoid the risk of fire or an explosion, **NEVER** use gasoline as a cleaning solvent.

SPARK ARRESTER CLEANING

Clean the spark arrester every 6 months or 100 hours of operation.

1. Remove the three 4 mm screws securing the exhaust deflector (Figure 37) to the muffler protector, then remove the exhaust deflector.

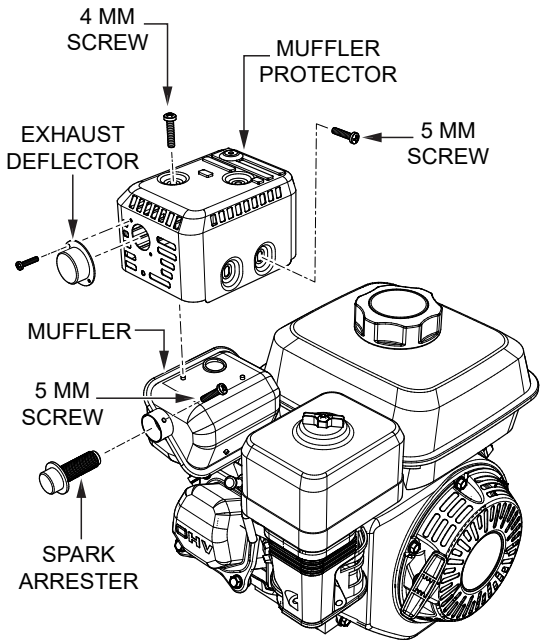

Figure 37. Spark Arrester

2. Remove the four 5 mm screws from the muffler protector (Figure 37), then remove the muffler protector.
3. Carefully remove carbon deposits from the spark arrester screen (Figure 38) with a wire brush.

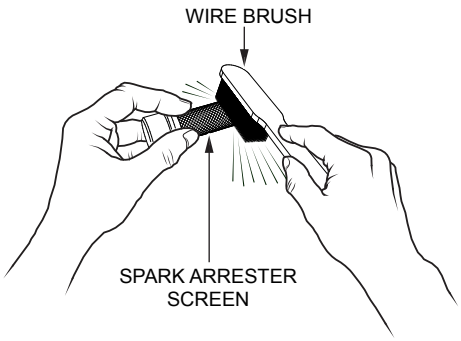

Figure 38. Cleaning the Spark Arrester

4. If the spark arrester has breaks or holes or is otherwise damaged, replace it with a new one.
5. Reinstall the spark arrester and muffler protector in reverse order of disassembly.

DRUM HEAD SEALS

On each end of the mixing drum there is a drum head containing self-adjusting graphite seals. These seals consist of packing rings, split glands, and spring-activated adjusters. A properly maintained seal prevents material from working around the shaft, causing excessive wear. The following is the recommended maintenance procedure for protection of the paddle shaft.

1. Keep the drum head clean of material buildup so the spring adjusters are free to work.
2. As the seals naturally wear, material will seep from the drum head. Tighten the adjusting nuts (Figure 39) equally until a slight pressure is felt. The seals are now tight. This procedure should be done periodically as the seals leak.

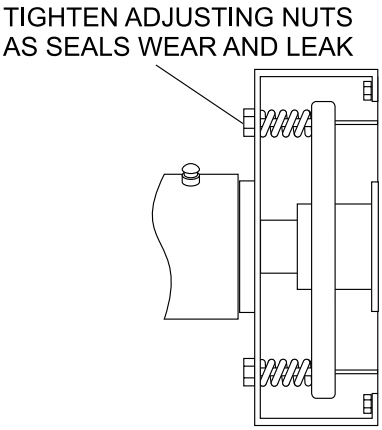

Figure 39. Drum Seal Adjusting Nuts

3. Once the pressure plate touches the drum, it is time to replace the graphite seals (Figure 40).

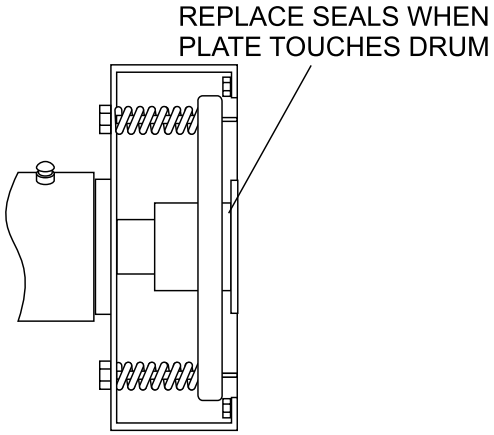

Figure 40. Replacing Drum Seals

DRUM SUPPORT BRACKET LUBRICATION

There is a set of drum support brackets (Figure 41) that will require lubrication. These brackets are intended to make the drum rotate freely. Lubricate the grease fitting for each drum support bracket using multipurpose-grade grease **every month or whenever the drum becomes difficult to position.**

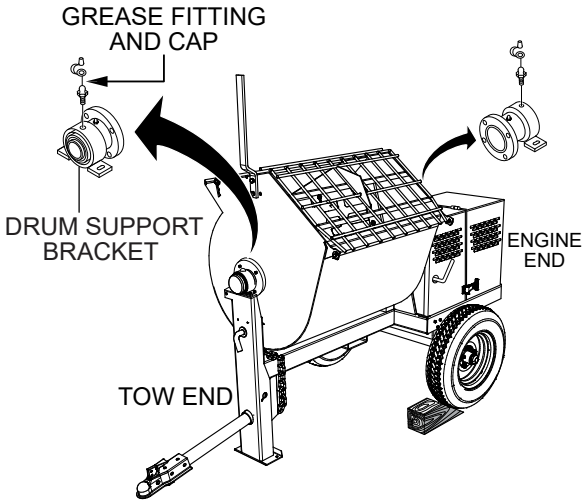

Figure 41. Grease Fittings (Dumping Mechanism)

> ***NOTICE***
>
> Failure to lubricate the Zerk grease fittings **two or three times a month** will cause the dumping mechanism to stiffen, making the mixer hard to dump.

BALL SOCKET AND CLAMP FACE MAINTENANCE

1. If the towing vehicle is equipped with a ball socket, smear the socket periodically with multipurpose grease. This will keep the ball socket well lubricated.
2. Periodically oil the **pivot points** and **clamp face surfaces** of the coupler with SAE 30 motor oil.
3. When parking or storing the mixer, keep the coupler off the ground so dirt will not build up in the ball socket.

COUNTERSHAFT BEARING LUBRICATION

There is a set of countershaft bearings (Figure 42) that will require lubrication. Lubricate the grease fitting for each countershaft bearing **every 40 hours of operation** using lithium-based grease.

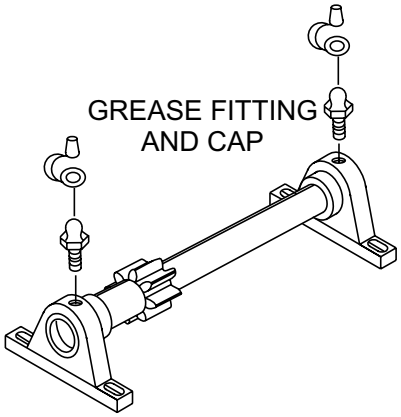

Figure 42. Grease Fittings (Countershaft)

WHEEL BEARINGS

1. After **every 3 months** of operation, remove the hub dust cap and inspect the wheel bearings (Figure 43). Once a year, or as needed, disassemble the wheel hubs and remove the old grease. Then repack the bearings, forcing grease between the rollers, cone and cage with a good grade of high-speed wheel bearing grease. **NEVER** use grease heavier than 265 ASTM penetration ('No. 2').

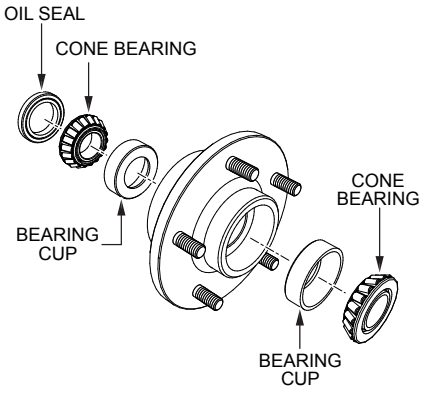

Figure 43. Wheel Hub and Bearings

2. Fill the wheel hub (Figure 43) with grease to the inside diameter of the outer faces and also fill the hub grease cap.
3. Reassemble the hub and mount the wheel. To make sure all of the bearing surfaces are in contact, tighten the adjusting nut while turning the wheel in both directions until there is a slight bind.

   Back off the adjusting nut 1/6 to 1/4 turn, or to the nearest locking hole, or sufficiently to allow the wheel to rotate freely within limits of 0.001–0.010 inches of end play. Lock the nut at this position. Install the cotter pin and dust cap and tighten all hardware.

MAIN GEAR AND DRIVE PINION ALIGNMENT

1. **Disconnect the spark plug wire** and make sure the clutch engagement lever is disengaged to relieve V-belt tension.
2. The countershaft and drive pinion are mounted on a slotted base. To align the drive pinion with the main gear, loosen the pillow block mounting bolts and move them until the necessary alignment has been made. Remember that the gears must be aligned in parallel, not skewed.
3. Using your hand, slightly move (rock) the drive pulley back and forth to determine the amount of backlash. Insert a feeler gauge between the gears to determine the backlash distance. Backlash should range between 0.007–0.012 inches (Figure 44).

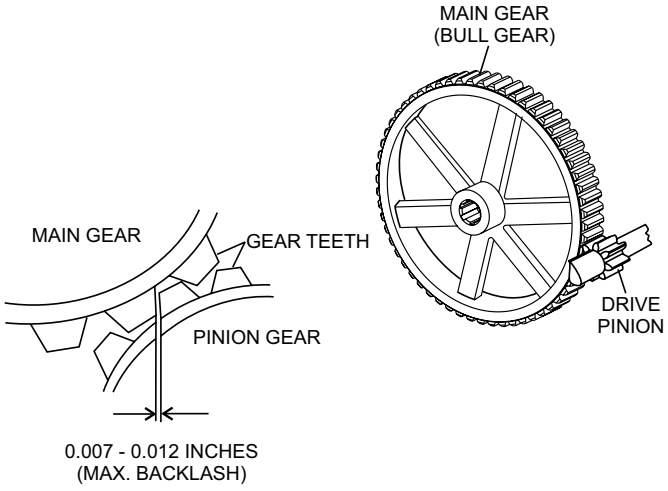

Figure 44. Drive Pinion and Main Gear (Backlash)

MAIN GEAR AND DRIVE PINION TOOTH CONTACT

1. Rotate the drive pulley in both directions.
2. Inspect the tooth pattern.
3. If the gear teeth are not contacting properly (Figure 45), adjust the pillow block to correct the problem.

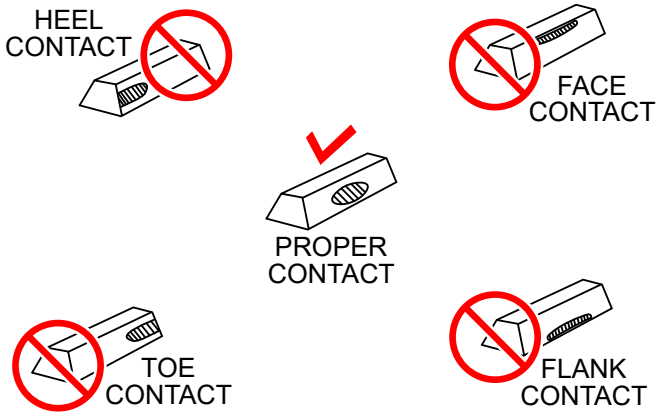

Figure 45. Gear Teeth Alignment

MIXER CLEANING

NOTICE

It is important that the drum interior remains free of dried material. Obstructions can cause the paddle blades to lock against the drum.

1. Make sure the engine is stopped.
2. Place the clutch engagement lever in the **disengage** position.
3. **ALWAYS disconnect the spark plug wire** before cleaning the inside of the drum.
4. Place a '**Do Not Operate**' tag on the mixer.
5. Make sure the rear section of the safety grate is connected to the mixing drum.
6. At the end of operation each day, place the mixer drum in an upright position and spray the inside of the tub immediately with water to prevent lumps of dried mortar or plaster from forming and contaminating future batches.
7. **DO NOT** allow a buildup of materials to form on the blades or anywhere inside the drum.
8. Rotate the mixer to the **dump** position and remove debris.
9. **Thoroughly clean** the entire mixer, wheels, cabinet and frame.

NOTICE

NEVER pour or spray water over the engine (Figure 46).



Figure 46. No Spraying of Water

10. When cleaning of the entire mixer is complete, return the mixing drum to an upright position.

TIRES/WHEELS/LUG NUTS

Tires and wheels are very important and critical components of the trailer. When specifying or replacing the trailer wheels it is important that the wheels, tires and axle are properly matched.

⚠ WARNING



DO NOT attempt to repair or modify a wheel. **DO NOT** install an inter-tube to correct a leak through the rim. If the rim is cracked, the air pressure in an inter-tube may cause pieces of the rim to explode (break off) with great force which can cause **serious eye or bodily injury**.

Tire Wear/Inflation

Tire inflation pressure is the most important factor for tire life. Pressure should be checked cold before operation. **DO NOT** bleed air from tires when they are hot. Check inflation pressure weekly during use to ensure maximum tire life and tread wear.

WARNING



ALWAYS wear safety glasses when removing or installing force-fitted parts. Failure to comply may result in serious injury.

Table 8 shows causes and solutions of tire wear problems.

Table 8. Tire Wear Troubleshooting

Wear Pattern		Cause	Solution
	Center Wear	Overinflation	Adjust pressure to particular load per tire manufacturer.
	Edge Wear	Underinflation	Adjust pressure to particular load per tire manufacturer.
	Side Wear	Loss of chamber or overloading	Make sure load does not exceed axle rating. Align wheels.
	Toe Wear	Incorrect toe-in	Align wheels.
	Cupping	Out of balance	Check bearing adjustment and balance tires.
	Flat Spots	Wheel lockup and tire skidding	Avoid sudden stops when possible and adjust brakes.

Lug Nut Torque Requirements

It is extremely important to apply and maintain proper wheel mounting torque. Be sure to use only the fasteners matched to the cone angle of the wheel. The proper procedure for attachment of the wheels is as follows:

1. Start all wheel lug nuts by hand.
2. Torque (tighten) all lug nuts in sequence (Figure 47). **DO NOT** torque the wheel lug nuts all the way down. Torque each lug nut in **3 separate passes** as defined in Table 9.

NOTICE

NEVER use a pneumatic air gun to tighten wheel lug nuts.

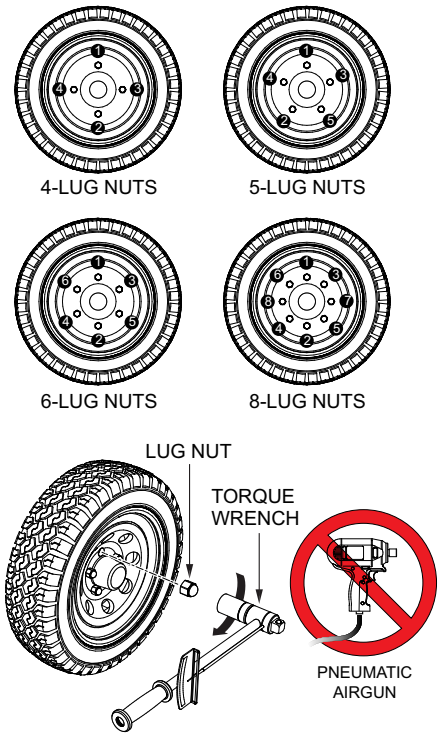

Figure 47. Wheel Lug Nuts Tightening Sequence

Table 9. Tire Torque Requirements

Wheel Size	First Pass lbf·ft	Second Pass lbf·ft	Third Pass lbf·ft
12"	20–25	35–40	50–65
13"	20–25	35–40	50–65
14"	20–25	50–60	90–120
15"	20–25	50–60	90–120
16"	20–25	50–60	90–120

3. After the first road use, retorque all lug nuts in sequence. Check all wheel lug nuts periodically.

SUSPENSION

The rigid suspension and associated components (Figure 48) should be visually inspected monthly for signs of excessive wear, elongation of bolt holes or loosening of the mounting bracket. Replace any damaged suspension components immediately.

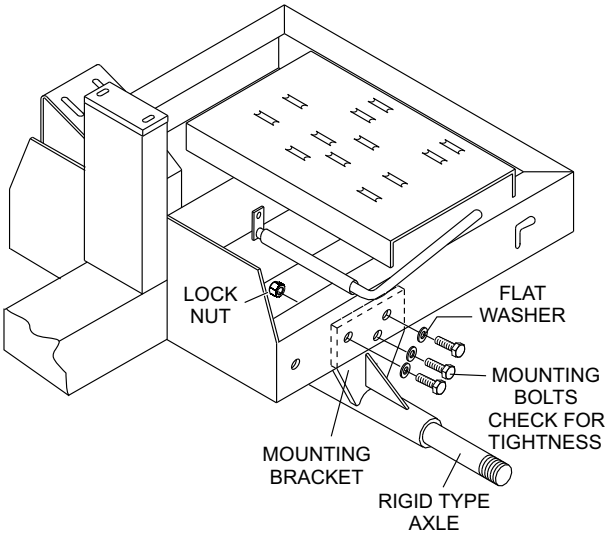

Figure 48. Suspension Components

LONG-TERM STORAGE

For storage of the mixer for over 30 days, the following is recommended:

- Drain the fuel tank completely, or add STA-BIL® to the fuel.
- Run the engine until the gasoline in the carburetor is completely consumed.
- Completely drain the oil from the crankcase and refill with fresh oil.
- Remove the spark plug, pour 2–3 cc of SAE 30 oil into the cylinder and crank slowly to distribute the oil.
- Slowly rotate the engine a few times with the starter rope and install a new plug.
- Slowly pull out the starter rope and stop at the compression point.
- Clean the entire mixer and engine compartment.
- Clean the drum of all debris and foreign matter.
- Clean all external parts of the mixer with a cloth.
- Cover the mixer and place it a clean, dry area where it will be protected from harsh elements.

Troubleshooting (Mixer)		
Symptom	**Possible Problem**	**Solution**
Paddle blades will not rotate.	Worn or defective main (bull) gear? [1]	Check main gear. Replace if worn or broken.
	Worn or defective pinion gear? [1]	Check pinion gear. Replace if worn.
	Worn or defective V-belt? [1]	Replace V-belt.
	Adjustment lever misaligned? [1]	Check position of adjustment lever. Adjust if necessary.
	Material load too heavy, exceeding mixer capability?	Reduce amount of material being mixed.
	Object stuck inside mixing drum, jamming paddle rotation?	Stop engine. Empty out drum contents. Remove obstruction.
	Improper engine speed? [1]	Check and adjust engine speed.
	Engine not running or stalls? [1]	Check engine.
	Electric motor not connected? [1]	Check electric motor. Apply power.
	Incorrect relief valve pressure? [2]	Inspect for proper relief pressure.
	Defective hydraulic motor or pump? [2]	Contact MQ Technical Services.
	Slow hydraulic cylinder dumping? [2]	Contact MQ Technical Services.
	Contaminated relief cartridge? [3]	Inspect relief pressure. PRO12 = 1,750 psi PRO20 = 2,300 psi
Paddle blades rotate too slow.	Mixing paddles slipping under load?	Adjust idler wheel tension. [1]
	Worn or defective V-belt? [1]	Replace V-belt.
Material is leaking from drum ends.	Worn or defective paddle shaft seals?	Replace seals.
Drum is difficult to discharge (tilt).	Defective or worn drum support brackets?	Apply grease to brackets or replace.
	Blades adjusted too tight?	Adjust blades until they almost touch side walls of drum.
	Drum pivot bracket contaminated with dirt?	Grease bracket.
Main (bull) or pinion gear is worn. [1]	Gears out of adjustment?	Inspect for proper gear backlash. Inspect that gears are properly centered.
Gear teeth are not contacting properly. [1]	Worn or damaged pillow block bearings?	Adjust or replace pillow block bearings.

[1] If equipped

[2] Hydraulic models only

[3] Models PRO12 and PRO20 only

Troubleshooting (Engine)		
Symptom	**Possible Problem**	**Solution**
Difficult to start, fuel is available, but no spark at spark plug.	Spark plug bridging?	Check gap, insulation or replace spark plug.
	Carbon deposit on spark plug?	Clean or replace spark plug.
	Short circuit due to deficient spark plug insulation?	Check spark plug insulation, replace if worn.
	Improper spark plug gap?	Set to proper gap.
	Spark plug is red?	Check transistor ignition unit.
	Spark plug is bluish white?	If insufficient compression, repair or replace engine. If injected air leaking, correct leak. If carburetor jets clogged, clean carburetor.
	No spark present at tip of spark plug?	Check transistor ignition unit is broken, and replace defective unit. Check if voltage cord is cracked or broken and replace. Check if spark plug is fouled. Replace if fouled.
	No oil?	Add oil as required.
	Oil pressure alarm lamp blinks upon starting? (if applicable)	Check automatic shutdown circuit, "oil sensor". (if applicable)
Difficult to start, fuel is available, and spark is present at the spark plug.	ON/OFF switch is shorted?	Check switch wiring, replace switch.
	Ignition coil defective?	Replace ignition coil.
	Improper spark gap, points dirty?	Set correct spark gap and clean points.
	Condenser insulation worn or short circuiting?	Replace condenser.
	Spark plug wire broken or short circuiting?	Replace defective spark plug wiring.
Difficult to start, fuel is available, spark is present and compression is normal.	Wrong fuel type?	Flush fuel system, replace with correct type of fuel.
	Water or dust in fuel system?	Flush fuel system.
	Air cleaner dirty?	Clean or replace air cleaner.
	Choke open?	Close choke.
Difficult to start, fuel is available, spark is present and compression is low.	Suction/exhaust valve stuck or protruded?	Reseat valves.
	Piston ring and/or cylinder worn?	Replace piston rings and/or piston.
	Cylinder head and/or spark plug not tightened properly?	Torque cylinder head bolts and spark plug.
	Head gasket and/or spark plug gasket damaged?	Replace head and spark plug gaskets.
No fuel present at carburetor.	No fuel in fuel tank?	Fill with correct type of fuel.
	Fuel cock does not open properly?	Apply lubricant to loosen fuel cock lever, replace if necessary.
	Fuel filter/lines clogged?	Replace fuel filter.
	Fuel tank cap breather hole clogged?	Clean or replace fuel tank cap.
	Air in fuel line?	Bleed fuel line.
Will not start, no power with key "ON". (if applicable)	ON/OFF device not in ON position?	Place ON/OFF device in ON posotion.

Troubleshooting (Engine) - continued		
Symptom	**Possible Problem**	**Solution**
Weak in power, compression is proper and does not misfire.	Air cleaner dirty?	Clean or replace air cleaner.
	Improper level in carburetor?	Check float adjustment, rebuild carburetor.
	Defective spark plug?	Clean or replace spark plug.
	Improper spark plug?	Set to proper gap.
Weak in power, compression is proper but misfires.	Water in fuel system?	Flush fuel system and replace with correct type of fuel.
	Dirty spark plug?	Clean or replace spark plug.
	Ignition coil defective?	Replace ignition coil.
Engine overheats.	Spark plug heat value incorrect?	Replace with correct type of spark plug.
	Wrong type of fuel?	Replace with correct type of fuel.
	Cooling fins dirty?	Clean cooling fins.
	Intake air restricted?	Clear intake of dirt and debris. Replace air cleaner elements as necessary.
	Oil level too low or too high?	Adjust oil to proper level.
Rotational speed fluctuates.	Governor adjusted incorrectly?	Adjust governor.
	Governor spring defective?	Replace governor spring.
	Fuel flow restricted?	Check entire fuel system for leaks or clogs.
Recoil starter malfunctions. (if applicable)	Recoil mechanism clogged with dust and dirt?	Clean recoil assembly with soap and water.
	Spiral spring loose?	Replace spiral spring.
Burns too much fuel.	Over-accumulation of exhaust products?	Check and clean valves. Check muffler and replace if necessary.
	Wrong spark plug?	Replace spark plug with manufacturer's suggested type.
Exhaust color is continuously "white".	Lubricating oil is wrong viscosity?	Replace lubricating oil with correct viscosity.
	Worn rings?	Replace rings.
Exhaust color is continuously "black".	Air cleaner clogged?	Clean or replace air cleaner.
	Choke valve set to incorrect position?	Adjust choke valve to correct position.
	Carburetor defective, seal on carburetor broken?	Replace carburetor or seal.
	Poor carburetor adjustment, engine runs too rich?	Adjust carburetor.

OPERATION MANUAL

HERE'S HOW TO GET HELP

PLEASE HAVE THE MODEL AND SERIAL NUMBER ON-HAND WHEN CALLING

UNITED STATES

Multiquip Inc.

(310) 537- 3700
6141 Katella Avenue Suite 200
Cypress, CA 90630
E-MAIL: mq@multiquip.com
WEBSITE: www.multiquip.com

CANADA

Multiquip

(450) 625-2244
4110 Industriel Boul.
Laval, Quebec, Canada H7L 6V3
E-MAIL: infocanada@multiquip.com

UNITED KINGDOM

Multiquip (UK) Limited Head Office

0161 339 2223
Unit 2, Northpoint Industrial Estate,
Globe Lane,
Dukinfield, Cheshire SK16 4UJ
E-MAIL: sales@multiquip.co.uk

© COPYRIGHT 2022, MULTIQUIP INC.

Multiquip Inc, the MQ logo are registered trademarks of Multiquip Inc. and may not be used, reproduced, or altered without written permission. All other trademarks are the property of their respective owners and used with permission.

This manual MUST accompany the equipment at all times. This manual is considered a permanent part of the equipment and should remain with the unit if resold.

The information and specifications included in this publication were in effect at the time of approval for printing. Illustrations, descriptions, references and technical data contained in this manual are for guidance only and may not be considered as binding. Multiquip Inc. reserves the right to discontinue or change specifications, design or the information published in this publication at any time without notice and without incurring any obligations.

MULTIQUIP®