OPERATION MANUAL

MULTIQUIP®

Mikasa SERIES

MODEL MTX70HDR

TAMPING RAMMER

(HONDA GXR120RT-KRBF GASOLINE ENGINE)

Revision #5 (06/25/24)

To find the latest revision of this publication or associated parts manual, visit our website at:
www.multiquip.com

THIS MANUAL MUST ACCOMPANY THE EQUIPMENT AT ALL TIMES.


WARNING
CANCER &
REPRODUCTIVE HARM
www.P65Warnings.ca.gov
P/N 38707

NOTES

MTX70HDR Rammer

Proposition 65 Warning 2
Safety Information 5–8
Specifications 9
Noise And Vibration Emissions..... 10
General Information.....11
Components 12
Basic Engine..... 13
Transporting And Lifting..... 14
Inspection 15
Operation..... 16–17
Maintenance 18
Troubleshooting (Engine) 19–20
Troubleshooting (Rammer)..... 21

NOTICE

Specifications and part numbers are subject to change without notice.

Do not operate or service the equipment before reading the entire manual. Safety precautions should be followed at all times when operating this equipment. Failure to read and understand the safety messages and operating instructions could result in injury to yourself and others.



SAFETY MESSAGES

The four safety messages shown below will inform you about potential hazards that could injure you or others. The safety messages specifically address the level of exposure to the operator and are preceded by one of four words: **DANGER, WARNING, CAUTION** or **NOTICE.**

SAFETY SYMBOLS

DANGER

Indicates a hazardous situation which, if not avoided, **WILL** result in **DEATH** or **SERIOUS INJURY.**

WARNING

Indicates a hazardous situation which, if not avoided, **COULD** result in **DEATH** or **SERIOUS INJURY.**

CAUTION

Indicates a hazardous situation which, if not avoided, **COULD** result in **MINOR** or **MODERATE INJURY.**

NOTICE

Addresses practices not related to personal injury.

Potential hazards associated with the operation of this equipment will be referenced with hazard symbols which may appear throughout this manual in conjunction with safety messages.

Symbol	Safety Hazard
	Lethal exhaust gas hazards
	Explosive fuel hazards
	Burn hazards
	Respiratory hazards
	Accidental starting hazards
	Eye and hearing hazards

GENERAL SAFETY

⚠ CAUTION

- **NEVER** operate this equipment without proper protective clothing, shatterproof glasses, respiratory protection, hearing protection, steel-toed boots and other protective devices required by the job or city and state regulations.



- **NEVER** operate this equipment when not feeling well due to fatigue, illness or when under medication.



- **NEVER** operate this equipment under the influence of drugs or alcohol.



- **ALWAYS** check the equipment for loosened threads or bolts before starting.
- **DO NOT** use the equipment for any purpose other than its intended purposes or applications.

NOTICE

- This equipment should only be operated by trained and qualified personnel 18 years of age and older.
- Whenever necessary, replace nameplate, operation and safety decals when they become difficult read.
- Manufacturer does not assume responsibility for any accident due to equipment modifications. Unauthorized equipment modification will void all warranties.
- **NEVER** use accessories or attachments that are not recommended by Multiquip for this equipment. Damage to the equipment and/or injury to user may result.
- **ALWAYS** know the location of the nearest **fire extinguisher.**



- **ALWAYS** know the location of the nearest **first aid kit.**



- **ALWAYS** know the location of the nearest phone or **keep a phone on the job site.** Also, know the phone numbers of the nearest **ambulance, doctor** and **fire department.** This information will be invaluable in the case of an emergency.

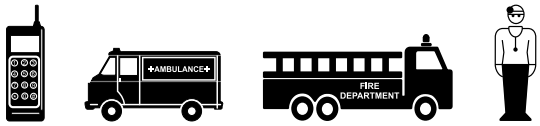

RAMMER SAFETY

⚠ DANGER

- **NEVER** operate the equipment in an explosive atmosphere or near combustible materials. An explosion or fire could result causing severe **bodily harm or even death.**



⚠ WARNING

- **NEVER** disconnect any **emergency or safety devices.** These devices are intended for operator safety. Disconnection of these devices can cause severe injury, bodily harm or even death. Disconnection of any of these devices will void all warranties.
- **DO NOT** use this machine on ground that is harder than the machine can handle, or for driving pilings or tamping rock beds. Furthermore, use of the machine on sloping ground, such as the side of an embankment, may make the machine unstable and can cause an accident. It can also result in premature machine wear due to uneven loads on the machine.

  Use the machine with confidence for tamping earth and sand, soil, gravel, and asphalt. **DO NOT** use the machine for other types of jobs.

⚠ CAUTION

- **NEVER** lubricate components or attempt service on a running machine.

NOTICE

- **ALWAYS** keep the machine in proper running condition.
- Fix damage to machine and replace any broken parts immediately.
- **ALWAYS** store equipment properly when it is not being used. Equipment should be stored in a clean, dry location out of the reach of children and unauthorized personnel.

ENGINE SAFETY

⚠ DANGER

- The engine fuel exhaust gases contain poisonous carbon monoxide. This gas is colorless and odorless, and can cause death if inhaled.
- The engine of this equipment requires an adequate free flow of cooling air. **NEVER** operate this equipment in any enclosed or narrow area where free flow of the air is restricted. If the air flow is restricted it will cause injury to people and property and serious damage to the equipment or engine.



⚠ WARNING

- **DO NOT** place hands or fingers inside engine compartment when engine is running.
- **NEVER** operate the engine with heat shields or guards removed.
- **DO NOT** remove the engine oil drain plug while the engine is hot. Hot oil will gush out of the oil tank and severely scald any persons in the general area of the rammer.



⚠ CAUTION

- **NEVER** touch the hot exhaust manifold, muffler or cylinder. Allow these parts to cool before servicing equipment.



NOTICE

- **NEVER** run engine without an air filter or with a dirty air filter. Severe engine damage may occur. Service air filter frequently to prevent engine malfunction.
- **NEVER** tamper with the factory settings of the engine or engine governor. Damage to the engine or equipment can result if operating in speed ranges above the maximum allowable.



FUEL SAFETY

⚠ DANGER

- DO NOT add fuel to equipment if it is placed inside truck bed with plastic liner. Possibility exists of explosion or fire due to static electricity.

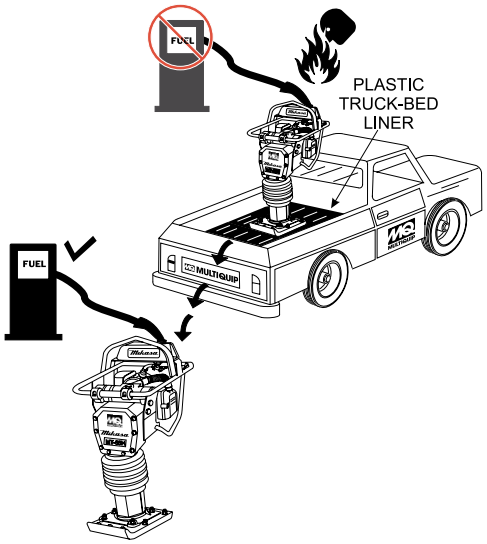

- **DO NOT** start the engine near spilled fuel or combustible fluids. Fuel is extremely flammable and its vapors can cause an explosion if ignited.
- **ALWAYS** refuel in a well-ventilated area, away from sparks and open flames.
- **ALWAYS** use extreme caution when working with **flammable** liquids.
- **DO NOT** fill the fuel tank while the engine is running or hot.
- **DO NOT** overfill tank, since spilled fuel could ignite if it comes into contact with hot engine parts or sparks from the ignition system.
- Store fuel in appropriate containers, in well-ventilated areas and away from sparks and flames.
- **NEVER** use fuel as a cleaning agent.
- **DO NOT** smoke around or near the equipment. Fire or explosion could result from fuel vapors or if fuel is spilled on a hot engine.



TRANSPORTING SAFETY

⚠ CAUTION

- NEVER allow any person or animal to stand underneath the equipment while lifting.

NOTICE

- Before lifting, make sure that the equipment parts (hook and vibration insulator) are not damaged and screws are not loose or missing.
- Always make sure crane or lifting device has been properly secured to the lifting bail (hook) of the equipment.
- **ALWAYS** shutdown engine before transporting.
- **NEVER** lift the equipment while the engine is running.
- Tighten fuel tank cap securely and close fuel cock to prevent fuel from spilling.
- Use adequate lifting cable (wire or rope) of sufficient strength.
- Use one point suspension hook and lift straight upwards.
- **DO NOT** lift machine to unnecessary heights.
- **ALWAYS** tie down equipment during transport by securing the equipment with rope.
- Never allow any person or animal to stand underneath the equipment while lifting.

ENVIRONMENTAL SAFETY

NOTICE

- Dispose of hazardous waste properly. Examples of potentially hazardous waste are used motor oil, fuel and fuel filters.



- **DO NOT** use food or plastic containers to dispose of hazardous waste.
- **DO NOT** pour waste, oil or fuel directly onto the ground, down a drain or into any water source.

Table 1. Rammer Specifications	
Overall Height	40.43 in. (1027 mm)
Overall Width	13.78 in. (350 mm)
Over Length	31.02 in. (788 mm)
Shoe Size (W x L)	13.4 x 11.2 in. (340 x 285 mm)
Fuel Tank Capacity	2.7 qt. (2.5 liters)
Lubrication Oil Capacity	0.8 qt. (0.75 liter)
No. of Impacts Per Second	10.7 - 11.5
Impact Force	3350 lbf (14.9 kN)
Impact Plate Stroke	2 - 3.15 in. (50 - 80 mm)
Operating Weight	165.34 lbs. (75 kg)

Table 2. Engine Specifications	
Model	Honda GXR120RTKRBF Engine
Type	Air-Cooled 4 Stroke, Overhead camshaft, single cylinder gasoline engine
Piston Displacement	7.38 cu.in. (121 cc)
Max. Output	3.6 hp/3,600 rpm (2.7 KW)
Max. Governed Speed, No Load	3,800 - 4,100 rpm
Cooling System	Air-Cooled
Engine Oil Capacity	0.3 qt. (0.28 liters)
Fuel	Unleaded gasoline
Lubricant for Engine	Automobile Oil; Class SE or higher
Starting System	Recoil Starter
Spark Plug Type	NGK CR5HSB/DENSO V16 FSR-VB

Table 3. Noise and Vibration Emissions	
Measured Sound Power Level in dB(A)	104
Guaranteed Sound Power Level in dB(A)	107
Guaranteed Sound Pressure Level at Operator Station in dB(A)	94
Hand-Arm Vibration in m/s^2	5.6

NOTES:

1. *Products are tested for sound pressure level in accordance with European Directives 2000/14/EC and 2005/88/EC, relating to Noise Emission in the Environment by equipment for use outdoors.*
2. *Products are tested for hand/arm vibration (HAV) level in accordance with European Directives 2002/44/EC and EN500-4 and ISO 5349-1:2001, ISO 5349-2:2001.*

The Multiquip MTX70HDR tamping rammer is a powerful compacting tool capable of applying a tremendous force in consecutive impacts to a soil surface. Its applications include soil compacting for road, embankments and reservoirs as well as backfilling for gas pipelines, water pipelines and cable installation work.

The impact force of the MTX70HDR levels and uniformly compacts voids between soil particles to increase dry density.

Circular motion is converted to create impact force. The MTX70HDR tamping rammer develops a powerful compacting force at the foot of the rammer. To maintain optimum performance, proper operation and service are essential.

The MTX70HDR is equipped with an air cooled, four- cycle gasoline engine. Transmission of the power takes place by increasing the engine speed to engage the centrifugal clutch.

The MTX70HDR uses an oil bath lubrication system. Always check the oil level through the oil level sight glass at the rear of the tamper foot.

Before starting the MTX70HDR Tamping Rammer identify and understand the function of the controls.

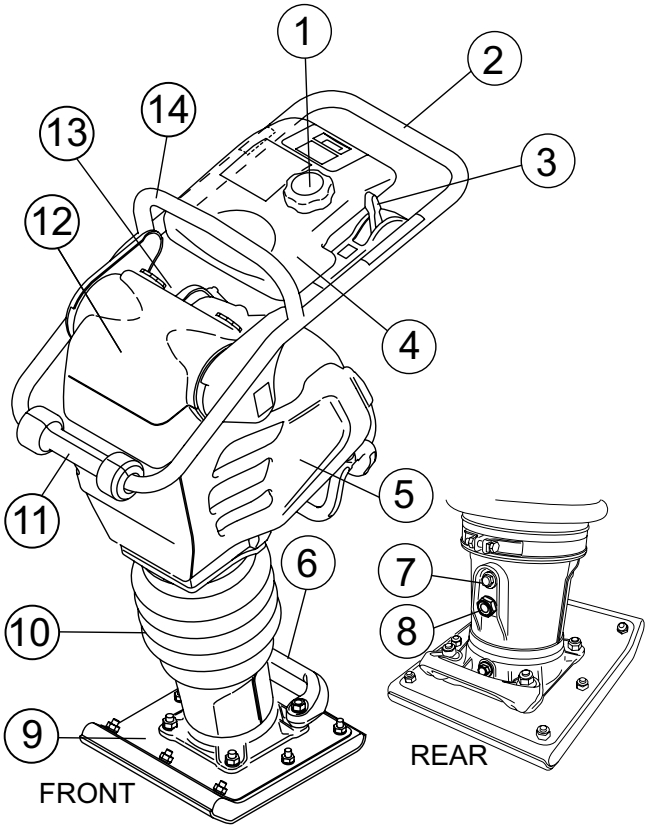

Figure 1. MTX70HDR Rammer

Figure 1 shows the location of the controls and components for the MTX70HDR Tamping Rammer. The functions of each control is described below:

1. **Fuel Tank Cap** — Remove this cap to add unleaded gasoline to the fuel tank.
2. **Guide Handle** — Used by the operator ***while standing behind the machine*** to control direction and speed.
3. Combination (Throttle) Lever — Used to adjust engine speed (rpm).
4. **Fuel Tank** — Holds the fuel for the unit (up to 3.2 quarts/0.8 gallons).
5. **Engine** — This unit uses a Honda gasoline engine.
6. **Lower Lifting Handle** — Used with rollers (item 6) to facilitate the loading onto tailgate of a truck or transport vehicle.
7. **Oil Gauge (Sight Glass)** — Indicates the level of oil in the oil bath reservoir.
8. **Drain Valve** — Open this valve to remove oil from the bellows.
9. **Foot** — Laminated wood with tempered steel plate for superior shock absorption.
10. **Bellows** — Reservoir for oil bath.
11. **Roller** — Facilitates loading onto tailgate of a truck or transport vehicle
12. **Air Cleaner Cover** — Protects the air cleaner which prevents dirt and other debris from entering the engine.
13. **Muffler** — Reduces the noise of the engine when running.
14. **Center Lifting Point** — Connection point for a lifting hook or strap when lifting with a forklift, crane or other machinery.

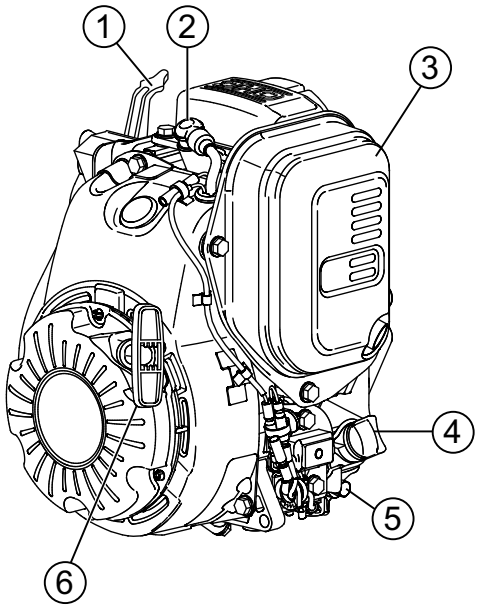

Figure 2. Honda GXR120RT-KRBF Engine

The engine (Figure 2) must be checked for proper lubrication and filled with fuel prior to operation. Refer to the engine manufacturer's manual for detailed operation and service information.

1. **Choke Lever** — Normally used in starting the engine in cold weather conditions. In cold weather, turn the choke lever to the fully closed position. In warm weather, set the choke lever halfway or completely open.
2. **Spark Plug** — Provides spark to the ignition system. Set spark plug gap to 0.024 - 0.028 inch (0.6 - 0.7 mm). Clean spark plug once a week.
3. **Muffler** — Used to reduce noise and emissions.
4. **Dipstick/Oil Filler Cap** — Remove this cap to determine if the engine oil is low. Add oil through this filler port as recommended in Table 3.
5. **Oil Drain Plug** — Remove this plug to remove oil from the engine's crankcase.
6. **Recoil Starter (pull rope)** — Manual-starting method. Pull the starter grip until resistance is felt, then pull briskly and smoothly.

NOTICE

Operating the engine without an air filter, with a damaged air filter, or a filter in need of replacement will allow dirt to enter the engine, causing rapid engine wear.

⚠ WARNING

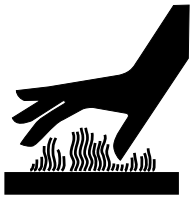

Engine components can generate extreme heat. To prevent burns, **DO NOT** touch these areas while the engine is running or immediately after operating. **NEVER** operate the engine with the muffler removed.

Inspect the ***lower lifting handle*** (Figure 3) for cracks or damage. If the lifting handle is damaged in any way, replace it immediately. Ensure hardware is properly tightened before use.

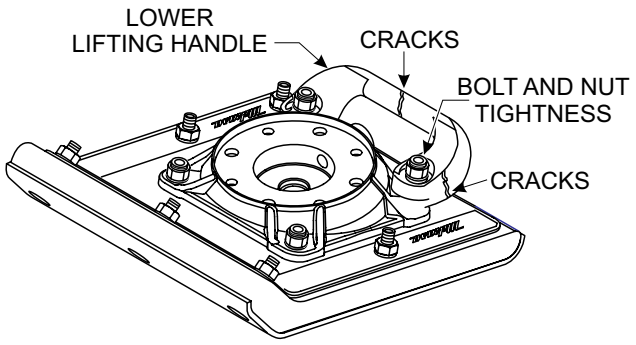

Figure 3. Lower Lifting Handle Inspection

RAMMER LOADING (TRUCK TAILGATE)

1. Tilt rammer so that the roller makes contact with the edge of the truck tail gate as shown in Figure 4.
2. Next, grab lower lifting handle and ***push*** rammer forward until rammer is fully postioned onto truck bed.
3. Using straps, secure rammer to truck bed.

NOTICE

DO NOT use the lower lifting handle as a connection point when transporting or lifting with forklifts, cranes or other machinery.

RAMMER LIFTING

1. When using a forklift or crane to lift the rammer, attach a suitable lifting strap to the ***lifting handle*** on the rammer as shown in Figure 5.

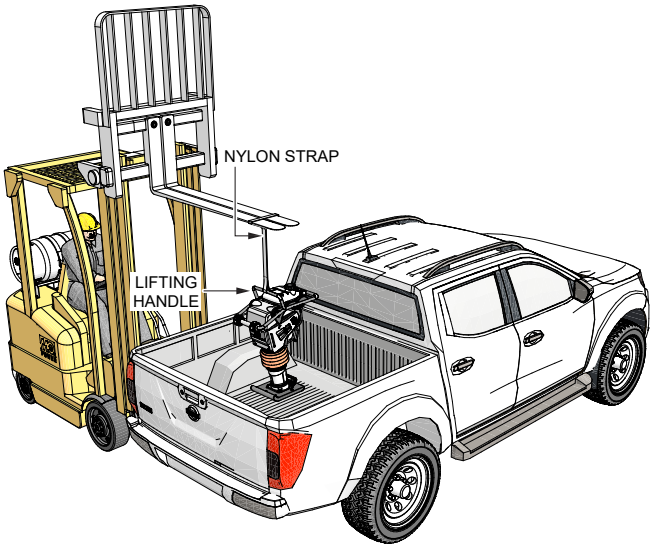

Figure 5. Rammer Lifting (Forklift/Crane)

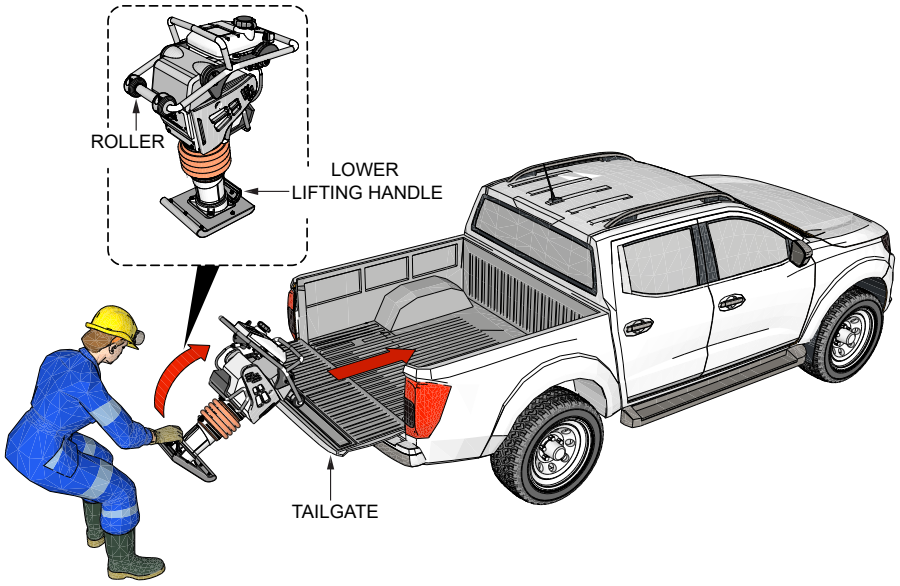

Figure 4. Loading Rammer Onto Truck Bed

It is extremely important that this section be read carefully before attempting to operate the rammer. **DO NOT** use your rammer until this section is thoroughly understood.

CRANKCASE AND SPRING CYLINDER OIL BATH

This unit uses an oil bath lubrication system. Perform the following:

1. Check the oil level through the oil level sight glass (Figure 6) at the rear of the tamper foot.

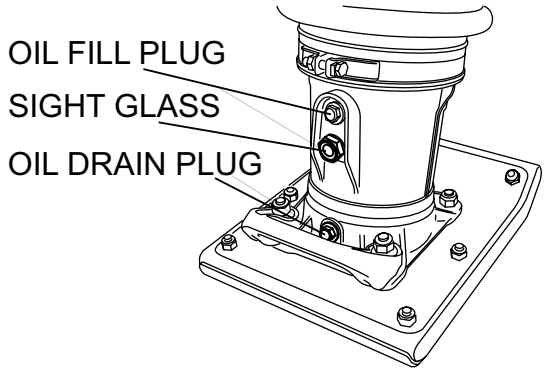

Figure 6. Foot Housing Sight Glass

NOTICE

The oil level should be kept at the half way point of the sight glass.

2. If oil is not visible, add 10W-30 SE, SF or higher grade motor oil into the oil fill plug opening (Figure 6). The bath contains approximately 0.8 qt. (0.75 liter).

ENGINE

WARNING



RISK OF FIRE! Refueling should be preformed only while the engine is off. Attempting to refuel while engine is running, or while the engine is hot, can ignite fuel spills and result in personal injury.

1. Fill the fuel tank (Figure 7) with unleaded gasoline. After refueling, make sure cap is tightened securely. **DO NOT** over fill. At the same time, check the engine oil and make it a habit to replenish it often (Figure 8).

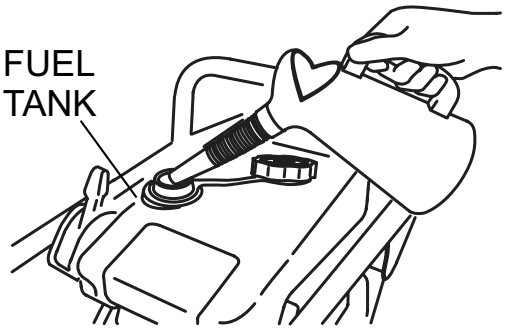

Figure 7. Fuel Tank

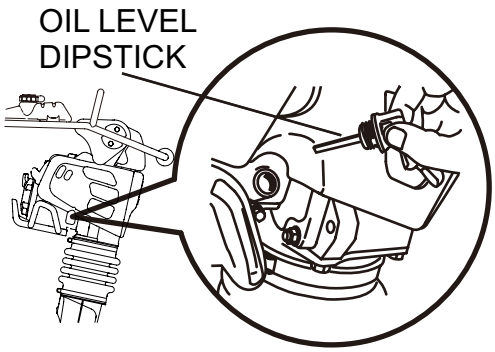

Figure 8. Engine Oil Dipstick

2. Low levels of oil may result in engine seizure due to high levels of consumption during operation.
3. Check the engine oil level and if the engine oil level is low, it should be refilled. Use the proper motor oil as suggested in the Table 4 below.

Table 4. Motor Oil Grade

Season or Temperature	Grade of motor oil (higher than MS class)
Spring, Summer or Autumn +120° F to +15° F	SAE 30
Winter+40° F to +15° F	SAE 30
Below +15° F	SAE 10W-30

GENERAL INSPECTION

1. Check all nuts, bolts fasteners for tightness. Retighten as necessary.
2. Clean any dirt from the recoil starter and foot pedestal. Wipe the entire unit clean before operating.
3. Replace any missing or damaged Safety Operation decals.

⚠ CAUTION

Failure to understand the operation of the Tamping Rammer could result in severe damage to the unit or personal injury.

INITIAL STARTUP

When starting the MTX70HDR Tamping Rammer perform the following:

1. Slide the throttle lever from the stop to the idle position (🐢) (Figure 9). This opens the fuel cock and the engine electrical circuit is turned on automatically.

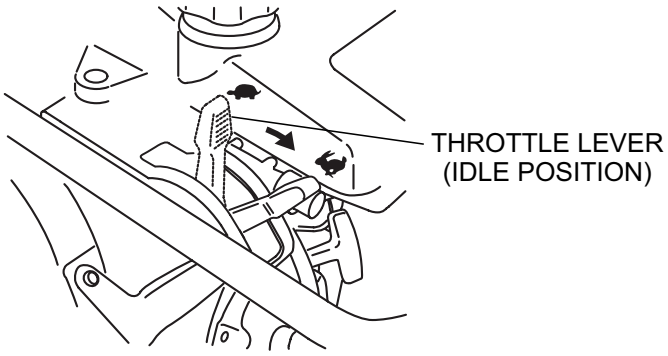

Figure 9. Throttle Lever (Idle Position)

2. Carburetor Purge System: Push the purge bulb four times or until you see fuel in the bulb (Figure 10).



Figure 10. Purge Bulb

NOTICE

Pumping the purge bulb removes air from the fuel system. It does not pump fuel into the carburetor.

3. Place the choke lever to the closed position. When the weather is cold, close the choke all the way. When it is hot, or if the engine is hot, open the choke a little or leave it fully open.

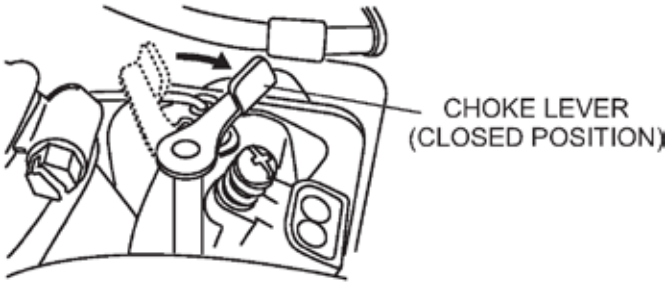

Figure 11. Choke Lever

4. Grip the starter rope handle (Figure 12) and pull it until you feel a slight resistance. Then pull sharply and quickly. Return the handle to the starter case before releasing.

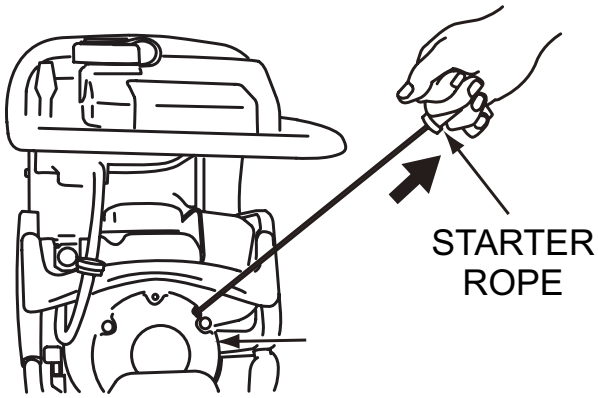

Figure 12. Recoil Starter

5. If engine fails to start, move the choke lever (Figure 11) to the half open position to avoid flooding.
6. Repeat steps 1 thru 5.
7. If the engine does not start after repeated attempts, check the spark plug for excess fuel. Clean and replace the spark plug as needed.

NOTICE

To reduce engine speed, move throttle lever forward (🐢), to increase engine speed, move lever back towards operator (🐇). Always operate rammer at full rpm.

OPERATION

CAUTION

Rammer should only be operated while ***standing behind the machine, and holding Guide Handle firmly with both hands*** (Figure 13**A**). **NEVER** operate rammer while holding handle/roller at the front of the machine (Figure 13**B**), damage to the unit could result and personal injury.

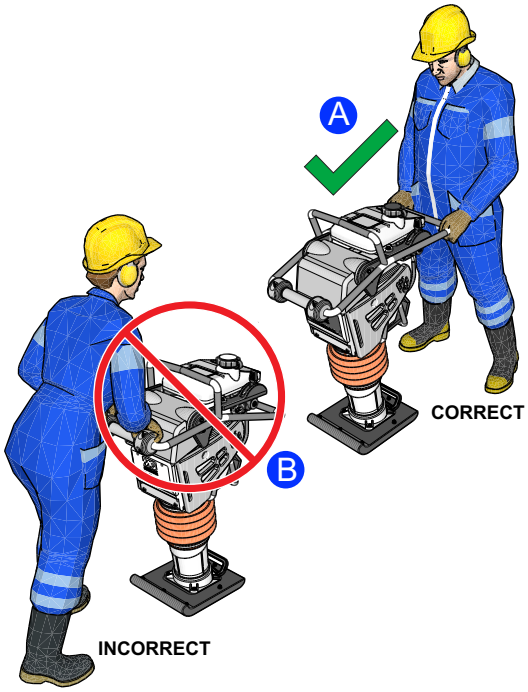

Figure 13. Rammer Operating Position

1. To start the rammer tamping action, move the throttle lever (Figure 14) ***quickly*** from **IDLE(🐢)** to the **START (🐇)** position. **DO NOT** move the throttle lever slowly as this may cause damage to the clutch or spring.

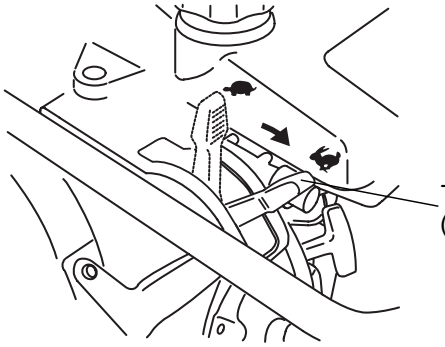

Figure 14. Throttle Lever (Start Position)

CAUTION

Make sure that the throttle lever is moved to the **FULL START** position. Operating the rammer at less than full speed can result in damage to the clutch springs or foot.

2. The MTX70HDR tamping rammer is designed to run at 3,800 to 4,100 rpm. At optimum rpm the foot hits at the rate between 590-695 impacts per minute. Increasing throttle speed past factory set rpm does not increase impacts and may damage unit.

   The MTX70HDR is designed to advance while tamping. For faster advance, pull back slightly on the handle so that rear of foot contacts soil first.

3. To stop the tamping action, move throttle lever quickly from the **START (🐇)** position to the **IDLE (🐢)** position (Figure 9).

STOPPING THE ENGINE

1. Move throttle lever quickly from the **START (🐇)** position to the **IDLE (🐢)** position (Figure 9) and run the engine for three minutes at low speed. After the engine ***cools***, move the throttle lever to the **STOP** position (Figure 15). The engine will stop and the fuel cock is automatically closed.



Figure 15. Throttle Lever (Stop Position)

2. If the engine does not stop due to a problem with the switch or the like, move the machine to a safe location and hold the throttle lever in the stop position. Let the machine run on idle and the machine will stop after a few minutes.

DAILY

- Thoroughly remove dirt and oil from the engine and control area.
- Clean or replace the air cleaner elements as necessary. Check and retighten all fasteners as necessary.
- Check the spring box and bellows for oil leaks. Repair or replace as needed.

EVERY 50 HOURS

- Inspect in-line fuel filter (Figure 16) and replace if necessary.

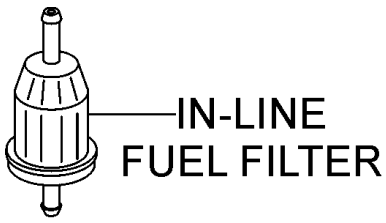

Figure 16. In-Line Fuel Filter

- Remove and clean the spark plug, then adjust the spark gap to 0.024~0.028 inch (0.6~0.7 mm).

EVERY 80 TO 100 HOURS

- Remove the air cleaner cover. Loosen and remove the 2 screws that hold the cover to the air cleaner assembly. If the primary element (Figure 17) is dirty, wash it with gasoline or kerosene. Then dip it in engine oil (SAE10W-30) and wring the element so that 25 to 30 cc of engine oil remains on the element.

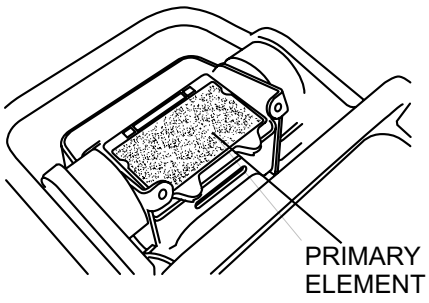

Figure 17. Air Cleaner Primary Element

EVERY 200 HOURS

- Remove the oil drain plug on foot housing (Figure 18) and drain the oil. Refill with approximately 0.8 qt. (0.75 liter) of 10W-30 SE, SF or higher grade motor oil. Oil should be midway in sight glass. Break-in oil should be changed after first 50 hours.

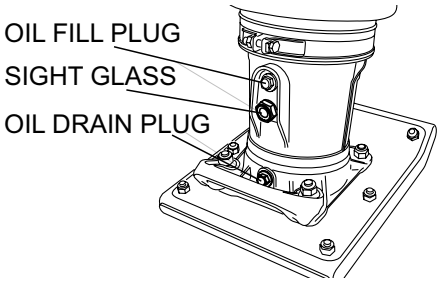

Figure 18. Oil Drain Plug

EVERY 6 MONTHS

- Clean the inside of the fuel tank with solvent.
- Inspect and clean fuel strainer (Figure 19). Replace strainer if necessary.

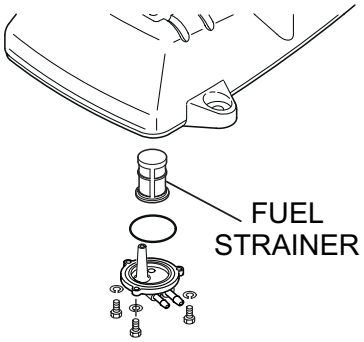

Figure 19. Fuel Strainer

EVERY 2 YEARS

- Replace the fuel line every 2 years even if there is no visible damage.

LONG TERM STORAGE

- Slide the throttle lever to the **STOP** position.
- Drain any fuel including in the fuel hose.
- Replace lubrication oil and apply grease to lubrication points.
- Cover the air intake on the air cleaner and the exhaust outlet on the muffler.
- Store unit indoors covered with plastic sheet in moisture free and dust free location out of direct sunlight.

Troubleshooting (Engine)		
Symptom	**Possible Problem**	**Solution**
Difficult to start, fuel is available, but no spark at spark plug.	Combo lever in incorrect position?	Make sure combo lever is in start position.
	Spark plug bridging?	Check gap, insulation or replace spark plug.
	Carbon deposit on spark plug?	Clean or replace spark plug.
	Short circuit due to deficient spark plug insulation?	Check spark plug insulation, replace if worn.
	Improper spark plug gap?	Set to proper gap.
	Fuel reaching carburetor?	Check fuel line.
	Water in fuel tank?	Flush or replace fuel tank.
	Fuel filter clogged?	Replace fuel filter.
	Stuck carburetor?	Check float mechanism.
	Spark plug is red?	Check transistor ignition unit.
	Spark plug is bluish white?	If insufficient compression, repair or replace engine. If injected air leaking, correct leak. If carburetor jets clogged, clean carburetor.
	No spark present at tip of spark plug?	Check transistor ignition unit is broken, and replace defective unit. Check if voltage cord cracked or broken and replace. Check if spark plug if fouled and replace.
	No oil?	Add oil as required.
Difficult to start, fuel is available, and spark is present at the spark plug.	ON/OFF switch is shorted?	Check switch wiring, replace switch.
	Ignition coil defective?	Replace ignition coil.
	Improper spark gap, points dirty?	Set correct spark gap and clean points.
	Condenser insulation worn or short circuiting?	Replace condenser.
	Spark plug wire broken or short circuiting?	Replace defective spark plug wiring.
Difficult to start, fuel is available, spark is present and compression is normal.	Wrong fuel type?	Flush fuel system, replace with correct type of fuel.
	Water or dust in fuel system?	Flush fuel system.
	Air cleaner dirty?	Clean or replace air cleaner.
	Choke open?	Close choke.
Difficult to start, fuel is available, spark is present and compression is low.	Suction/exhaust valve stuck or protruded?	Reseat valves.
	Piston ring and/or cylinder worn?	Replace piston rings and/or piston.
	Cylinder head and/or spark plug not tightened properly?	Torque cylinder head bolts and spark plug.
	Head gasket and/or spark plug gasket damaged?	Replace head and spark plug gaskets.
No fuel present at carburetor.	No fuel in fuel tank?	Fill with correct type of fuel.
	Fuel cock does not open properly?	Apply lubricant to loosen fuel cock lever, replace if necessary.
	Fuel filter/lines clogged?	Replace fuel filter.
	Fuel tank cap breather hole clogged?	Clean or replace fuel tank cap.
	Air in fuel line?	Bleed fuel line.

Troubleshooting (Engine) - continued		
Symptom	**Possible Problem**	**Solution**
Weak in power, compression is proper and does not misfire.	Air cleaner dirty?	Clean or replace air cleaner.
	Improper level in carburetor?	Check float adjustment, rebuild carburetor.
	Defective spark plug?	Clean or replace spark plug.
	Improper spark plug?	Set to proper gap.
Weak in power, compression is proper but misfires.	Water in fuel system?	Flush fuel system and replace with correct type of fuel.
	Dirty spark plug?	Clean or replace spark plug.
	Ignition coil defective?	Replace ignition coil.
Engine overheats.	Spark plug heat value incorrect?	Replace with correct type of spark plug.
	Wrong type of fuel?	Replace with correct type of fuel.
	Cooling fins dirty?	Clean cooling fins.
	Intake air restricted?	Clear intake of dirt and debris. Replace air cleaner elements as necessary.
	Oil level too low or too high?	Adjust oil to proper level.
Rotational speed fluctuates.	Governor adjusted incorrectly?	Adjust governor.
	Governor spring defective?	Replace governor spring.
	Fuel flow restricted?	Check entire fuel system for leaks or clogs.
Recoil starter malfunctions. (if applicable)	Recoil mechanism clogged with dust and dirt?	Clean recoil assembly with soap and water.
	Spiral spring loose?	Replace spiral spring.
Starter malfunctions.	Loose, damaged wiring?	Ensure tight, clean connections on battery and starter.
	Battery insufficiently charged?	Recharge or replace battery.
	Starter damaged or internally shorted?	Replace starter.
Burns too much fuel.	Over-accumulation of exhaust products?	Check and clean valves. Check muffler and replace if necessary.
	Wrong spark plug?	Replace spark plug with manufacturer's suggested type.
Exhaust color is continuously "white".	Lubricating oil is wrong viscosity?	Replace lubricating oil with correct viscosity.
	Worn rings?	Replace rings.
Exhaust color is continuously "black".	Air cleaner clogged?	Clean or replace air cleaner.
	Choke valve set to incorrect position?	Adjust choke valve to correct position.
	Carburetor defective, seal on carburetor broken?	Replace carburetor or seal.
	Poor carburetor adjustment, engine runs too rich?	Adjust carburetor.
Will not start, no power with key "ON". (if applicable)	ON/OFF device not activated ON?	Turn on ON/OFF device.
	Battery disconnected or discharged?	Check cable connections. Charge or replace battery
	Ignition switch/wiring defective?	Replace ignition switch. Check wiring.

Troubleshooting (Rammer)		
Symptom	**Possible Problem**	**Solution**
Engine runs but rammer jumps erratically or not at all.	Operating speed of throttle lever is incorrectly set?	Set throttle lever to correct position.
	Oil in excess?	Drain excess oil. Bring to correct level.
	Clutch slips?	Replace or adjust clutch.
	Spring Failure?	Replace spiral spring.
	Speed of engine improper?	Adjust engine speed to correct operating RPM setting.
	Soil over-compacted?	Shut down machine and test soil.

OPERATION MANUAL

HERE'S HOW TO GET HELP

PLEASE HAVE THE MODEL AND SERIAL NUMBER ON-HAND WHEN CALLING

UNITED STATES

Multiquip Inc.

(310) 537- 3700
6141 Katella Avenue Suite 200
Cypress, CA 90630
E-MAIL: mq@multiquip.com
WEBSITE: www.multiquip.com

CANADA

Multiquip

(450) 625-2244
4110 Industriel Boul.
Laval, Quebec, Canada H7L 6V3
E-MAIL: infocanada@multiquip.com

UNITED KINGDOM

Multiquip (UK) Limited Head Office

0161 339 2223
Unit 2, Northpoint Industrial Estate,
Globe Lane,
Dukinfield, Cheshire SK16 4UJ
E-MAIL: sales@multiquip.co.uk

© COPYRIGHT 2024, MULTIQUIP INC.

Multiquip Inc, the MQ logo are registered trademarks of Multiquip Inc. and may not be used, reproduced, or altered without written permission. All other trademarks are the property of their respective owners and used with permission.

This manual MUST accompany the equipment at all times. This manual is considered a permanent part of the equipment and should remain with the unit if resold.

The information and specifications included in this publication were in effect at the time of approval for printing. Illustrations, descriptions, references and technical data contained in this manual are for guidance only and may not be considered as binding. Multiquip Inc. reserves the right to discontinue or change specifications, design or the information published in this publication at any time without notice and without incurring any obligations.

MULTIQUIP®