OPERATION MANUAL

MQ POWER®

MODEL GA3.6HR SERIES

GA3.6HR, GA3.6HRNC and GA3.6HRNC2,
60 HZ GENERATOR
(HONDA GX240 GASOLINE ENGINE)

⚠ DANGER

Improper use can cause
Serious Injury or DEATH from carbon monoxide, electrocution, fire or other hazards.

Read and understand manual before use.

Revision #4 (12/08/25)

To find the latest revision of this publication or associated parts manual, visit our website at:
www.multiquip.com



THIS MANUAL MUST ACCOMPANY THE EQUIPMENT AT ALL TIMES.

PROPOSITION 65/CHEMICALS/START FIRES WARNINGS



WARNING

The engine exhaust from this product contains chemicals know to the State of California to cause cancer, birth defects or other reproductive harm.

WARNING

Operation of this equipment may create sparks that can start fires around dry vegetation. A spark arrestor may be required. The operator should contact local fire agencies for laws or regulations relating to fire prevention requirements.

DANGER



Carbon Monoxide (CO) is, an odorless, colorless gas that can be harmful or fatal. The exhaust that emanates from the engine contains this CO gas. Using the generator indoors **CAN KILL YOU IN MINUTES**. When operating the generator, follow the instructions below to avoid carbon monoxide poisoning.

- **ONLY** operate the generator **OUTSIDE** in well ventilated areas and at least a minium of 20 ft. (6 meters) away from windows, doors and vents.
- **NEVER** direct the generator exhaust toward structures.
- **NEVER** operate the generator inside a building, home, garage, basement, attic, crawlspace, porch, vehicle, trailer, boat or any enclosed space. Reference Figure 1.

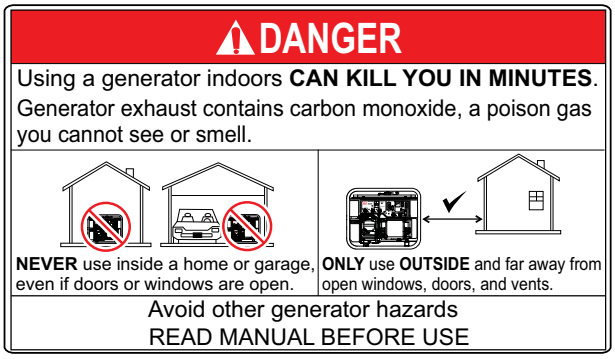

Figure 1. Carbon Monoxide Warning

- **NEVER** operate the generator near openings to a building or a home including doors, windows and vents.
- **NEVER** ignore the **RED *flashing*** status LED (***carbon monoxide sensor***) on the generator (Figure 2). Move to an open area ***immediately***. This feature is only availabe on the GA3.6HRNC2. Reference the CO Overview section in this manual.

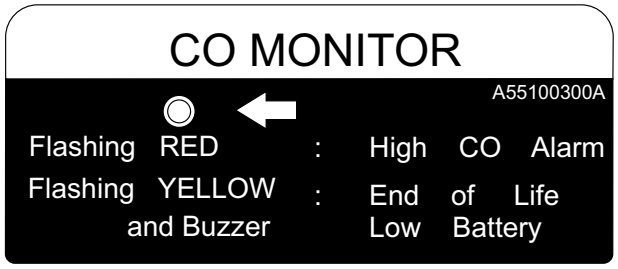

Figure 2. CO Status LED (RED)

Symptoms of carbon monoxide poisoning can include headache, dizziness, weakness, shortness of breath and nausea. If you experience these symptoms while using the generator, ***get fresh air immediately to avoid loss of consciousness or even death!***

It is also recommended that you install and maintain carbon monoxide detectors in buildings that you are working in to alert you to unsafe ***carbon monoxide*** levels.

This generator is equipped with a ***carbon monoxide sensor*** that will ***automatically stop the engine*** before carbon monoxide levels exceed unsafe operating levels.

NOTICE

NEVER modify the carbon monoxide sensor. The carbon monoxide sensor cannot prevent all dangers associated with or caused by carbon monoxide

ALWAYS ensure the generator location (placement) is far away from all buildings or structures windows, doors and vents.

GA3.6HR, GA3.6HRNC AND GA3.6HRNC2 60Hz Portable Generators

Proposition 65/Chemicals/Start Fires Warnings 2
Carbon Monoxide Warning 3
Nameplate/Safety Information 5
Safety Information 6-11
Specifications (Generator) 12
Specifications (Engine) 13
Dimensions 14
Installation 15-16
General Information 17
Carbon Monoxide Sensor Overview 18
Components (Generator) 19-21
Inspection/Setup 22-23
Operation 24-26
Shutdown 27
Preparation For Long Term Storage 28
Maintenance 29-33
Generator Wiring Diagram 34
Generator Wiring Diagram (CO Sensor) 35
Troubleshooting (Engine) 36-37
Troubleshooting (Generator) 38

DISCLAIMER:

Product features, descriptions, and specifications are based on published information at the time of publication and are subject to change at any time without notice. Multiquip Inc. and its affiliates reserve the right to change specifications, features, design, and descriptions of products at any time without notice.

NAMEPLATE AND SAFETY LABELS

Safety labels are attached to the generator as shown in Figure 3. Keep these safety labels clean at all times. When the safety labels become worn or damaged, contact your nearest dealer or the Multiquip Parts Dept.

NOTICE

For safety label part numbers, reference the parts section of this manual.

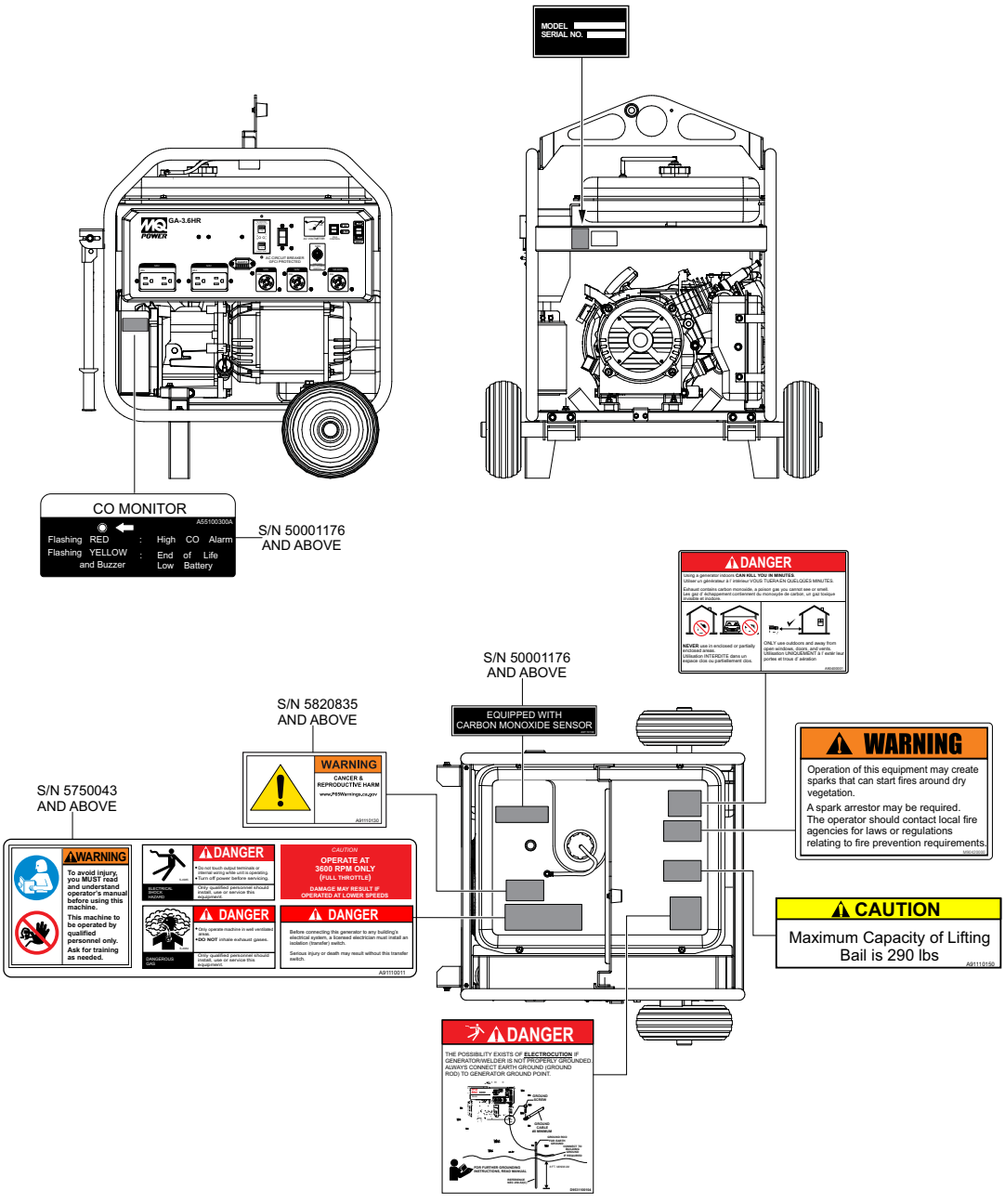

Figure 3. Nameplate And Safety Decals

Do not operate or service the equipment before reading the entire manual. Safety precautions should be followed at all times when operating this equipment. Failure to read and understand the safety messages and operating instructions could result in injury to yourself and others.

SAFETY MESSAGES

The four safety messages shown below will inform you about potential hazards that could injure you or others. The safety messages specifically address the level of exposure to the operator and are preceded by one of four words: **DANGER, WARNING, CAUTION** or **NOTICE.**

SAFETY SYMBOLS

DANGER

Indicates a hazardous situation which, if not avoided, **WILL** result in **DEATH** or **SERIOUS INJURY.**

WARNING

Indicates a hazardous situation which, if not avoided, **COULD** result in **DEATH** or **SERIOUS INJURY.**

CAUTION

Indicates a hazardous situation which, if not avoided, **COULD** result in **MINOR** or **MODERATE INJURY.**

NOTICE

Addresses practices not related to personal injury.

Potential hazards associated with the operation of this equipment will be referenced with hazard symbols which may appear throughout this manual in conjunction with safety messages.

Symbol	Safety Hazard
	Lethal exhaust gas hazards
	Explosive fuel hazards
	Burn hazards
	Overspeed hazards
	Electric shock hazards

GENERAL SAFETY

⚠ CAUTION

- **NEVER** operate this equipment without proper protective clothing, shatterproof glasses, respiratory protection, hearing protection, steel-toed boots and other protective devices required by the job or city and state regulations.



- **NEVER** operate this equipment when not feeling well due to fatigue, illness or when under medication.



- **NEVER** operate this equipment under the influence of drugs or alcohol.



- **ALWAYS** check the equipment for loosened threads or bolts before starting.
- **DO NOT** use the equipment for any purpose other than its intended purposes or applications.

NOTICE

- This equipment should only be operated by trained and qualified personnel 18 years of age and older.
- Whenever necessary, replace nameplate, operation and safety decals when they become difficult read.
- Manufacturer does not assume responsibility for any accident due to equipment modifications. Unauthorized equipment modification will void all warranties.
- **NEVER** use accessories or attachments that are not recommended by Multiquip for this equipment. Damage to the equipment and/or injury to user may result.
- **ALWAYS** know the location of the nearest **fire extinguisher.**



- **ALWAYS** know the location of the nearest **first aid kit.**



- **ALWAYS** know the location of the nearest phone or **keep a phone on the job site.** Also, know the phone numbers of the nearest **ambulance, doctor** and **fire department.** This information will be invaluable in the case of an emergency.

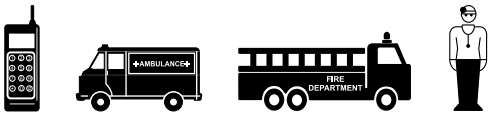

GENERATOR SAFETY

⚠ DANGER

- **NEVER** operate the equipment in an explosive atmosphere or near combustible materials. An explosion or fire could result causing severe **bodily harm or even death.**



⚠ WARNING

- **NEVER** disconnect any **emergency or safety devices.** These devices are intended for operator safety. Disconnection of these devices can cause severe injury, bodily harm or even death. Disconnection of any of these devices will void all warranties.

⚠ CAUTION

- **NEVER** lubricate components or attempt service on a running machine.

NOTICE

- **ALWAYS** ensure generator is on level ground before use.
- **ALWAYS** keep the machine in proper running condition.
- Fix damage to machine and replace any broken parts immediately.
- **ALWAYS** store equipment properly when it is not being used. Equipment should be stored in a clean, dry location out of the reach of children and unauthorized personnel

ENGINE SAFETY

⚠ DANGER

- The engine fuel exhaust gases contain poisonous carbon monoxide. This gas is colorless and odorless, and can cause death if inhaled.
- The engine of this equipment requires an adequate free flow of cooling air. **NEVER** operate this equipment in any enclosed or narrow area where free flow of the air is restricted. If the air flow is restricted it will cause injury to people and property and serious damage to the equipment or engine.



⚠ WARNING

- **NEVER** operate the engine with heat shields or guards removed.
- **DO NOT** remove the engine oil drain plug while the engine is hot. Hot oil will gush out of the engine crankcase and severely scald any persons in the general area of the generator.

⚠ CAUTION

- **NEVER** touch the hot exhaust manifold, muffler or cylinder. Allow these parts to cool before servicing equipment.



NOTICE

- **NEVER** run engine without an air filter or with a dirty air filter. Severe engine damage may occur. Service air filter frequently to prevent engine malfunction.
- **NEVER** tamper with the factory settings of the engine or engine governor. Damage to the engine or equipment can result if operating in speed ranges above the maximum allowable.



- State Health Safety Codes and Public Resources Codes specify that in certain locations, spark arresters must be used on internal combustion engines that use hydrocarbon fuels. A spark arrester is a device designed to prevent accidental discharge of sparks or flames from the engine exhaust. Spark arresters are qualified and rated by the United States Forest Service for this purpose. In order to comply with local laws regarding spark arresters, consult the engine distributor or the local Health and Safety Administrator.

FUEL SAFETY

⚠ DANGER

- **DO NOT** add fuel to equipment if it is placed inside truck bed with plastic liner. Possibility exists of explosion or fire due to static electricity.

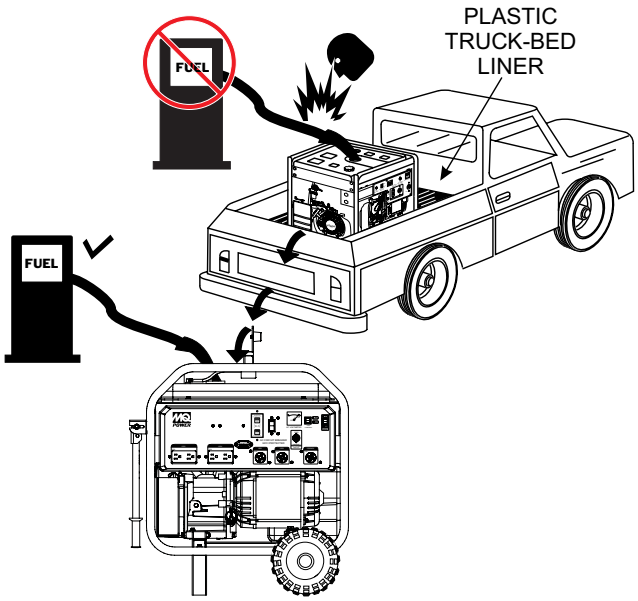

- **DO NOT** start the engine near spilled fuel or combustible fluids. Diesel fuel is extremely flammable and its vapors can cause an explosion if ignited.
- **ALWAYS** refuel in a well-ventilated area, away from sparks and open flames.
- **ALWAYS** use extreme caution when working with **flammable** liquids.
- **DO NOT** fill the fuel tank while the engine is running or hot.
- **DO NOT** overfill tank, since spilled fuel could ignite if it comes into contact with hot engine parts or sparks from the ignition system.
- Store fuel in appropriate containers, in well-ventilated areas and away from sparks and flames.

- **NEVER** use fuel as a cleaning agent.
- **DO NOT** smoke around or near the equipment. Fire or explosion could result from fuel vapors or if fuel is spilled on a hot engine.



ELECTRICAL SAFETY

⚠ DANGER

- Turn generator and all circuit breakers **OFF** before performing maintenance on the generator or making contact with output receptacles.
- **NEVER** insert any objects into the output receptacles during operation. This is extremely dangerous. The possibility exists of **electrical shock, electrocution or death.**



- Backfeed to a utility system can cause **electrocution** and/or property damage. **NEVER** connect the generator to a building's electrical system without a transfer switch or other approved device. All installations should be performed by a **licensed electrician** in accordance with all applicable laws and electrical codes. Failure to do so could result in electrical shock or burn, causing **serious injury or even death.**



Power Cord/Cable Safety

⚠ DANGER

- **NEVER** let power cords or cables **lay in water.**
- **NEVER stand in water** while AC power from the generator is being transferred to a load.
- **NEVER** use **damaged** or **worn** cables or cords when connecting equipment to generator. Inspect for cuts in the insulation.
- **NEVER** grab or touch a live power cord or cable with wet hands. The possibility exists of **electrical shock, electrocution or death.**

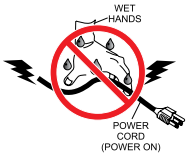

- Make sure power cables are securely connected to the generator's output receptacles. Incorrect connections may cause electrical shock and damage to the generator.

NOTICE

- **ALWAYS** make certain that proper power or extension cord has been selected for the job. See Cable Selection Chart in this manual.

Grounding Safety

⚠ DANGER

- **ALWAYS** make sure that electrical circuits are properly grounded to a suitable earth ground (ground rod) per the National Electrical Code (NEC) and local codes before operating generator. **Severe injury or death by electrocution** can result from operating an ungrounded generator.
- **NEVER** use gas piping as an electrical ground.

BATTERY SAFETY (ELECTRIC START ONLY)

⚠ DANGER

- **DO NOT** drop the battery. There is a possibility that the battery will explode.
- **DO NOT** expose the battery to open flames, sparks, cigarettes, etc. The battery contains combustible gases and liquids. If these gases and liquids come into contact with a flame or spark, an explosion could occur.



- **DO NOT** charge battery if frozen. Battery can explode. When frozen, warm the battery to at least 61°F (16°C).

⚠ WARNING

- **ALWAYS** wear safety glasses when handling the battery to avoid eye irritation. The battery contains acids that can cause injury to the eyes and skin.



- Use well-insulated gloves when picking up the battery.
- **ALWAYS** keep the battery charged. If the battery is not charged, combustible gas will build up.
- **ALWAYS** recharge the battery in a well-ventilated environment to avoid the risk of a dangerous concentration of combustible gasses.

- If the battery liquid (dilute sulfuric acid) comes into contact with **clothing or skin**, rinse skin or clothing immediately with plenty of water.
- If the battery liquid (dilute sulfuric acid) comes into contact with **eyes**, rinse eyes immediately with plenty of water and contact the nearest doctor or hospital to seek medical attention.

⚠ CAUTION

- **ALWAYS** disconnect the **NEGATIVE battery terminal** before performing service on the generator.
- **ALWAYS** keep battery cables in good working condition. Repair or replace all worn cables.

TRANSPORTING SAFETY

⚠ CAUTION

- **NEVER** allow any person or animal to stand underneath the equipment while lifting.

NOTICE

- Before lifting, make sure that the equipment parts (lifting bail if equipped) are not damaged and screws are not loose or missing.
- Always make sure crane or lifitng device has been properly secured to the lifting bail (hook) of the equipment.
- **ALWAYS** shutdown engine before transporting.
- **NEVER** lift the equipment while the engine is running.
- Tighten fuel tank cap securely and close fuel cock to prevent fuel from spilling.
- Use adequate lifting cable (wire or rope) of sufficient strength.
- Use one point suspension hook and lift straight upwards.
- **DO NOT** lift machine to unnecessary heights.
- **ALWAYS** tie down equipment during transport by securing the equipment with rope.

ENVIRONMENTAL SAFETY/DECOMMISSIONING

NOTICE

Decommissioning is a controlled process used to safely retire a piece of equipment that is no longer serviceable. If the equipment poses an unacceptable and unrepairable safety risk due to wear or damage or is no longer cost effective to maintain (beyond life-cycle reliability) and is to be decommissioned (demolition and dismantlement),be sure to follow rules below.

- **DO NOT** pour waste or oil directly onto the ground, down a drain or into any water source.
- Contact your country's Department of Public Works or recycling agency in your area and arrange for proper disposal of any electrical components, waste or oil associated with this equipment.



- When the life cycle of this equipment is over, remove battery (if equipped) and bring to appropriate facility for lead reclamation. Use safety precautions when handling batteries that contain sulfuric acid.
- When the life cycle of this equipment is over, it is recommended that the unit frame and all other metal parts be sent to a recycling center.

  Metal recycling involves the collection of metal from discarded products and its transformation into raw materials to use in manufacturing a new product.

  Recyclers and manufacturers alike promote the process of recycling metal. Using a metal recycling center promotes energy cost savings.

EMISSIONS INFORMATION

NOTICE

The gasoline engine used in this equipment has been designed to reduce harmful levels of carbon monoxide (CO), hydrocarbons (HC) and nitrogen oxides (NOx) contained in gasoline exhaust emissions.

This engine has been certified to meet US EPA Evaporative emissions requirements in the installed configuration.

Attempting to modify or make adjustments to the engine emmission system by unauthorized personnel without proper training could damage the equipment or create an unsafe condition.

Additionally, modifying the fuel system may adversely affect evaporative emissions, resulting in fines or other penalties.

Emission Control Label

The emission control label is an integral part of the emission system and is strictly controlled by regulation(s).

The label must remain with the engine for its entire life.

If a replacement emission label is needed, please contact your authorized Honda Engine Distributor.

Table 1. Specifications (Generator)		
AC Generator	Model	GA3.6HR, GA3.6HRNC, GA3.6HRNC2
	Type	Brushless Revolving Field Type
	Excitation	Solid State, Statically Excited System
	Speed	3,600 RPM
	Cooling System	Self-Ventilation
	Fuel Capacity	5 gallons (19 liters)
60 Hz AC Power Source	Continuous Power Output	3.2 kW
	Max Power Output	3.6 kW
	Rated Voltage	120/240V
	Current Max/Continuous (120V)	30/26.7 amps
	Current Max/Continuous (240V)	15/13.3 amps
	Phase	Single Phase (4 wire)
	Frequency	60 Hz
	Power Factor	1
Dimensions (L x W x H)		28.0 x 30.9 X 29.7 in. (710 X 785 X 755 mm)
Dry Net Weight		196 lbs. (89 kg.)

DISCLAIMER:

Product features, descriptions, and specifications are based on published information at the time of publication and are subject to change at any time without notice. Multiquip Inc. and its affiliates reserve the right to change specifications, features, design, and descriptions of products at any time without notice.

Table 2. Specifications (Engine)		
Engine	**Model**	**HONDA GX240**
	Type	Air-cooled 4 stroke, Single Cylinder, OHV, Horizontal Shaft Gasoline Engine
	Bore X Stroke	3.03 in. X 2.28 in. (77 mm x 58 mm.)
	Displacement	16.5 cu-in (270 cm^3)
	Max Output	7.9 H.P./3600 R.P.M.
	Fuel	Unleaded Automobile Gasoline
	Lube Oil Capacity	1.16 quarts (1.1 liters)
	Oil Alert System	Yes
	Speed Control Method	Centrifugal Fly-weight Type
	Starting Method	Recoil Start
Dimensions (L x W x H)		15.0 x 16.8 X 16.6in. (381 X 428 X 422 mm)
Dry Net Weight		56.8 lbs. (25.8 kg.)

Effects of Altitude and Heat

The maximum output of the engines listed above are applicable to supplying electrical power for continuous service at ambient conditions in accordance with SAE Test cord J607. The above ambient conditions are at standard sea level, with a barometric reading of 29.92 inches and a temperature of 60° F (15.5° C).

Generally, the engine's output power will decrease 3-1/2% for each 1000 feet (305 meters) of altitude above sea level, and 1% for each 10° F (-12.2° C) above the standard temperature of 60° F (15.5° C).

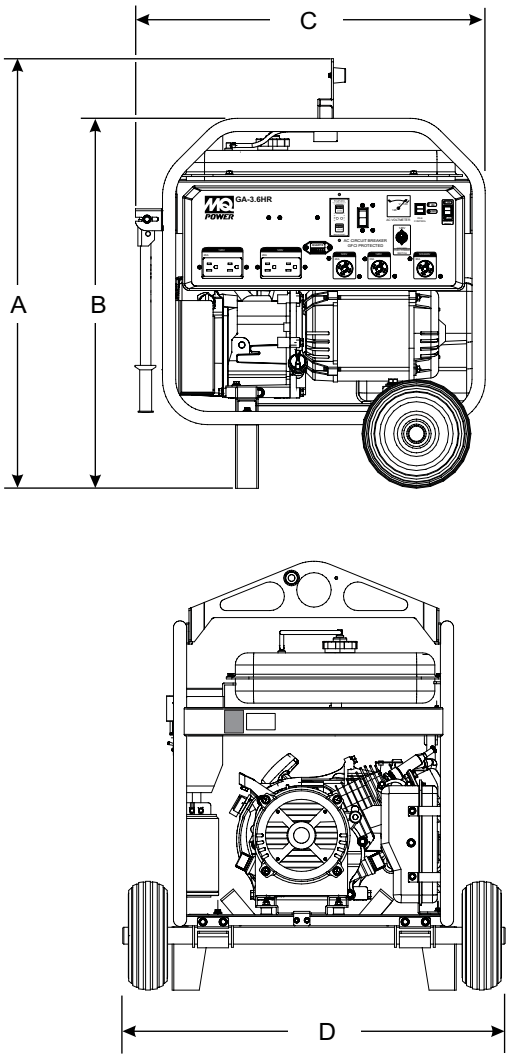

Figure 4. Dimensions

Table 3. Generator Dimensions		
REFERENCE LETTER	**DESCRIPTION**	**DIMENSIONS: IN. (MM)**
A	HEIGHT (LIFTING BALE)	34.1 (865)
B	HEIGHT (FRAME)	29.7 (755)
C	LENGTH	29.9 (760)
D	WIDTH	30.9 (785)

CONNECTING THE GROUND

The nut and ground terminal on the generator should always be used to connect the generator to a suitable ground. The ground cable should be #8 size wire (aluminum) minimum. If copper wire is used, #10 size wire minimum should be used

At the generator, connect the terminal of the ground cable between the lock washer and the nut (Figure 5) and tighten the nut fully. Connect the other end of the ground cable to a suitable earth ground (ground rod).

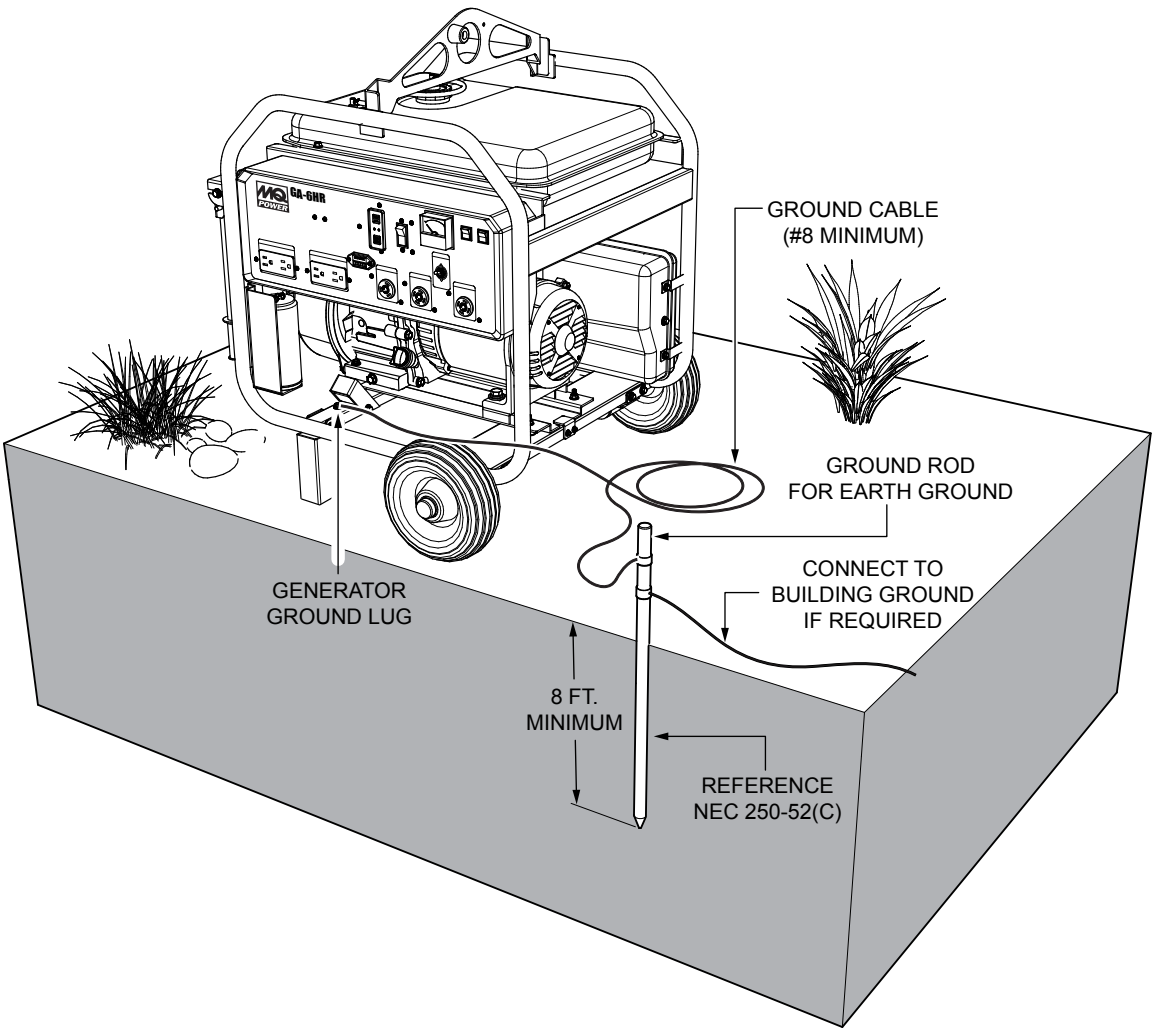

Figure 5. Generator Grounding

OUTDOOR INSTALLATION

If possible install the generator in a area that is free of debris, bystanders, and overhead obstructions. Make sure the generator is on secure level ground so that it cannot slide or shift around.

The installation site must be relatively free from moisture and dust. All electrical equipment should be protected from excessive moisture. Failure to do will result in deterioration of the insulation and will result in short circuits and grounding.

Foreign materials such as dust, sand, lint and abrasive materials have a tendency to cause excessive wear to engine and alternator parts.

WARNING



Pay close attention to ventilation when operating the generator inside tunnels and caves. The engine exhaust contains noxious elements. Engine exhaust must be routed to a ventilated area

INDOOR INSTALLATION

Exhaust gases from gas engines are extremely poisonous. Whenever an engine is installed indoors the exhaust fumes must be vented to the outside. The engine should be installed at least two feet from any outside wall. Using an exhaust pipe which is too long or too small can cause excessive back pressure which will cause the engine to heat excessively and possibly burn the valves.

PLACEMENT

The generator should always be placed on a flat level surface when it is running. **DO NOT** place the generator on slopes, the possibility exists that the generator could slide.

DANGER



An electric shock is apt to happen when vibrators are used. Pay close attention to handling when operating vibrators and always use rubber boots and gloves to insulate the body from a short circuit.

GENERATOR GROUNDING

To guard against electrical shock and possible damage to the equipment, it is important to provide a good **EARTH** ground.

Article 250 (Grounding) of the National Electrical Code (NEC) provides guide lines for proper grounding and specifies that the cable ground shall be connected to the grounding system of the building as close to the point of cable entry as practical.

NEC articles 250-64(b) and 250-66 set the following grounding requirements:

1. Use one of the following wire types to connect the generator to earth ground.
   a. Copper - 10 AWG (5.3 mm^2) or larger.
   b. Aluminum - 8 AWG (8.4 mm^2) or larger.
2. When grounding the generator (Figure 5) connect the ground cable between the lock washer and the nut on the generator and tighten the nut fully. Connect the other end of the ground cable to earth ground.
3. NEC article 250-52(c) specifies that the earth ground rod should be buried a minimum of 8 ft. into the ground.

NOTICE

When connecting the generator to any buildings electrical system **ALWAYS** consult with a licensed electrician.

FAMILIARIZATION

Generator

The Multiquip GA3.6HR series generators are designed as a portable dual purpose power source for 60 Hz (single phase) lighting facilities, power tools, submersible pumps and other industrial and construction machinery.

The generator is mounted on rubber vibration isolators that have a steel base backplate which is attached to the protective steel pipe carrying frame.

The protective carrying frame is made of steel tubing and fully wraps around the generator to protect against damage. Reference Figure 8, Figure 9 and Figure 12 for the basic controls and indicators for the GA3.6HR series generators.

These portable generators are supplied with a electrical control box (panel). To reduce vibration caused by the engine, the control box is also placed on rubber isolators.

Control Panel

The control panel is provided with the following:

- 120V Twist-Lock Output Receptacle (L5-20R)
- 120V Twist-Lock Output Receptacle (L5-30R)
- 120/240V Twist-Lock Output Receptacle (L14-30R)
- 120 VAC GFCI Receptacle (2)
- GFCI Sensing Module
- 15 Amp Main Circuit Breaker.
- AC Voltmeter
- Idle Control Switch
- Full Power Switch
- Operation Switch
- Hour Meter

DANGER

Before connecting this generator to any building's electrical system, a licensed electrician must install an isolation (transfer) switch.

Serious injury or death may result without this transfer switch.

Carbon Monoxide (CO) Sensor

Only the GA3.6HRNC2 generator is equipped with a sensor to constantly monitor ambient CO concentration and will shutdown the engine if unsafe CO levels are detected.

CO Sensor Operation

- High Carbon Monoxide
- Detection Sensor Activation

The engine will shutdown and the sensor will display a flashing **RED** status LED (Figure 6) at 5 second intervals when:

- CO concentration exceeds 250 ppm.
- Average CO concentration during a 10 minute period exceeds 130 ppm.

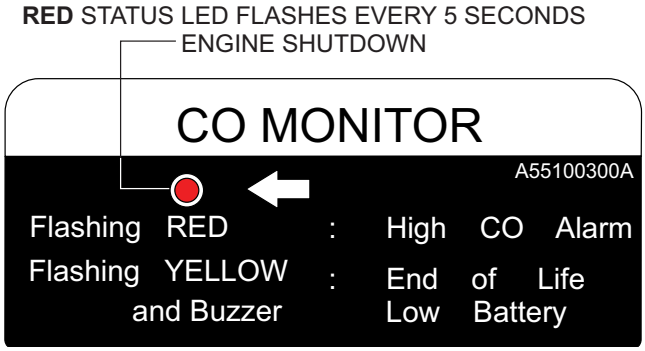

Figure 6. Red Status LED Engine Shutdown

Low Concentration Recovery (Sensor Reset)

When the sensor detects and ambient CO concentration less than 50 ppm during an 8 minute period, the **RED** status LED will turn **OFF** and the engine can be restarted.

Sensor/Battery Life

NOTICE

The internal battery cannot be replaced. The battery and sensor are a sealed package.

The CO sensor is equipped with an internal battery. When the battery charge falls below its required level of operation, the sensor will shutdown the engine.

The **YELLOW** status LED (Figure 7) will flash every 5 seconds and an audible alarm will sound every 60 seconds. This indicates the battery/sensor has reached the end of its life cycle and must be replaced.

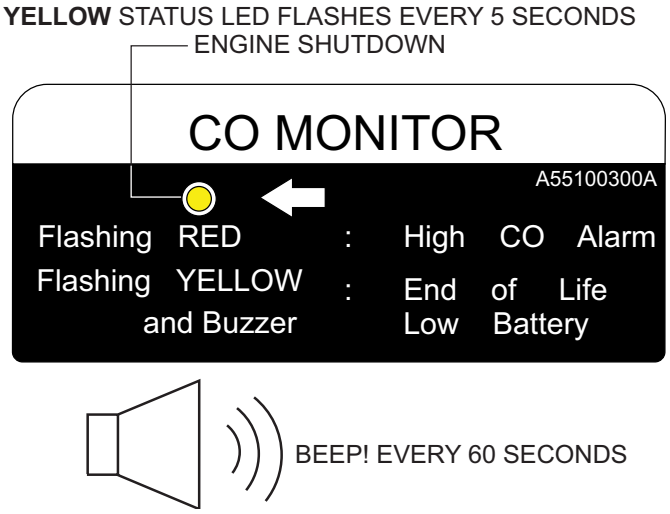

Figure 7. YELLOW Status LED Sensor Battery Replacement

WARNING



If the **RED** status LED flashes and the engine stops, this indicates that the CO concentration around the generator is too high. Move the generator to an open area ***immediately***.

When CO concentrations return to a safe operating level. The **RED** status LED will turn off. Before restarting, make sure generator is placed in a well venttilated area.

NOTICE

The operation of other generators or engine-driven equipment, in close proximity to the generator may cause activation of the CO sensor and generator shutdown. Always allow sufficient distance between equipment for proper air-flow to maintain low CO concentration at the work site.

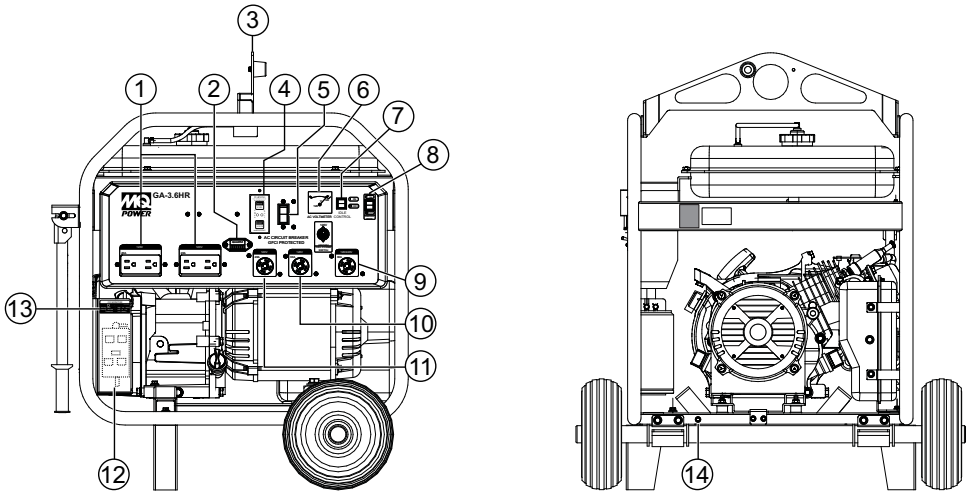

Figure 8. Generator Components

1. **GFCI Duplex Receptacles –** NEMA 5-20R, GFCI receptacle will provide 120V@ 20 amps.
2. **Hour Meter –** Indicates the number hours the generator has been in use.
3. **Lifting Ball Eye –** Attach a rope or chain to this lifting eye when lifting of the generator is required. Never stand underneath the generator while it is being lifted. Place lifting eye in down position when not in use.
4. **GFCI Sensing Module –** Interrupts power when a ground fault exist.
5. **Main Breaker –** This 2-pole, 15 amp circuit breaker protects the generator from short circuiting or overloading. When starting the generator always have the circuit breaker placed in the "**OFF**" position.
6. **AC-Voltmeter –** This voltmeter indicates (with a mark) the rated 60 Hz (single-phase) output voltage. In addition the voltmeter can also be used as a diagnostic tool. If the voltmeter indicator (needle) is below the rated voltage, engine problems may exist (low/high RPM's). To prevent damage to the generator or power tools turn the generator **OFF** and consult your authorized Multiquip service dealer.
7. **Idle Control Switch –** The generator is provided with an automatic idle control device for noise suppression and reduced fuel consumption. The automatic idle control automatically engages under a no-load condition. With the automatic idle control switched "**ON**", the engine revolutions will automatically drop to about 2500 rpm (low-speed operation) within 3 seconds after the load stops. When the operation is resumed, the engine speed is automatically increased to about 3600 rpm (high-speed operation) as soon as the load is connected.
8. **Operation Switch –** Place switch in the "ON" position (up) for normal operation. To turn-off the generator, place the operation switch in the "OFF" position (down)
9. **120/240V Output Receptacle –** NEMA L14-30R twist-lock receptacle will provide 240V, 60 Hz @ 13.3 amps, or 120V@ 26.7 amps (X2) 60 Hz. Depending on the position of the full power switch.
10. **120V Output Receptacle –** NEMA L5-30R twist-lock receptacle will provide 120V, 30 amps, 60 Hz.
11. **120V Output Receptacle –** NEMA L5-20R twist-lock receptacle will provide 120V, 20 amps, 60 Hz.
12. **Charcoal Canister –** A container filled with activated charcoal that traps gasoline vapors emitted by the fuel system.
13. **Carbon Monoxide Sensor –** Detects harmful CO levels (poisoning) and will shut down the engine when unsafe CO levels are present. Reference Carbon Monoxide Overview section. This feature is only available on the GA3.6HRNC2 model.
14. **Ground –** This ground connection point should be connect to a good earth ground (ground rod).

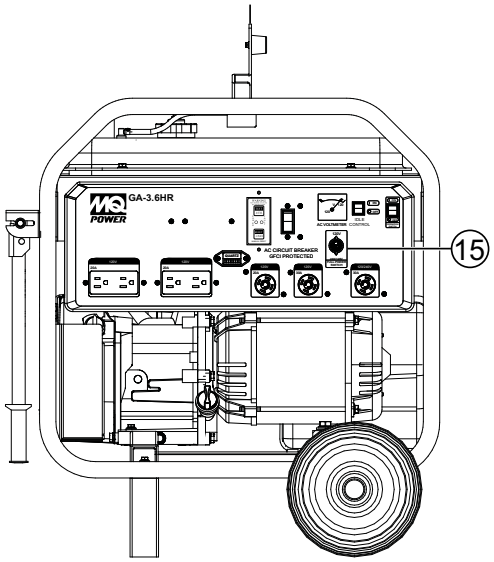

Figure 9. Full Power Switch

15. **Full Power Switch –** The generator is provided with a full power switch. Figure 10 and Figure 11 show simplified wiring diagrams of the dual voltage system.

    When the full power switch is in the 120 volt (up) position, you can access the full rated power of the generator at 120 volts from the GFCI duplex receptacle and the120V twist-lock receptacle, or a combination of both receptacles as long as the total load does not exceed the generating set capacity.

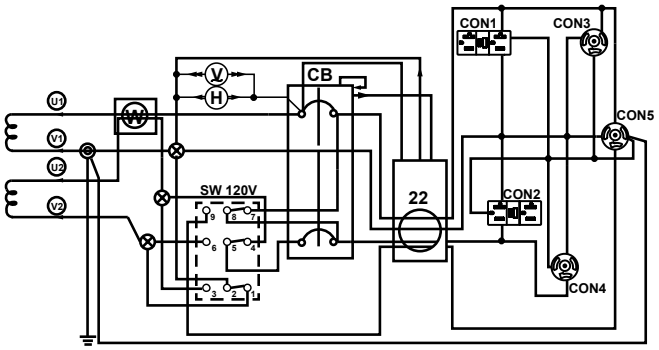

Figure 10. 120V Full Power Switch Simplified Diagram (Up Position)

NOTICE

When the ***full power switch*** is in the 120V position, the 240V twist-lock receptacle ***cannot be used***..

When the switch is in the 240 volt (down) position, you can access half of the rated power of the generating set at 120 volts from the GFCI duplex receptacle and up to half of the rated power of the set at 120 volts from 120V twist-lock receptacle; or full rated power of the set at 240 volts from the 240V twist-lock receptacle.

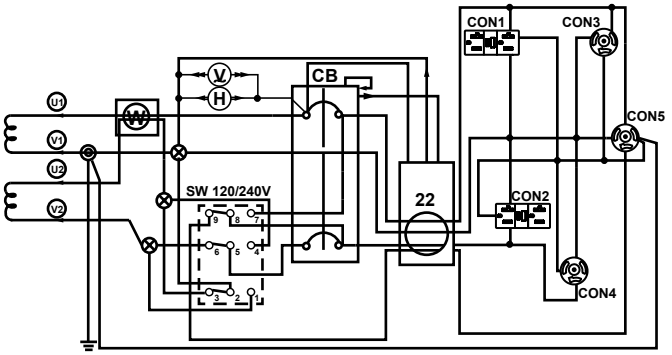

Figure 11. 240/120V Full Power Switch Simplified Diagram (Down Position)

NOTICE

When using a combination of receptacles, total load should not exceed the rated capacity of the generator.

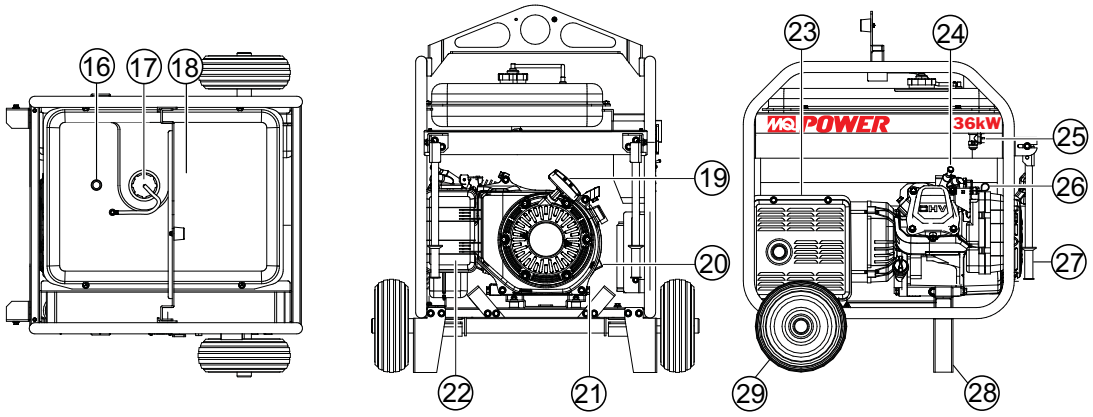

Figure 12. Generator Components (Continued)

16. **Fuel Gauge –** This gauge is located on top of the fuel tank. Read this gauge to determine when fuel is low.
17. **Fuel Tank Cap –** Remove this cap to add unleaded gasoline to the fuel tank. Replenish with clean unleaded gasoline. Make sure cap is tightened securely. **DO NOT** over fill.
18. **Fuel Tank –** Capacity is 5 gallons (19 liters). Fill with unleaded gasoline.
19. **Recoil Starter (pull rope) –** Manual-starting method. Pull the starter grip until resistance is felt, then pull briskly and smoothly.
20. **Engine Oil Filler Cap –** Remove this cap/dipstick when the adding of engine oil is required. See Table 2 for recommended type engine oil.
21. **Engine Oil Drain Plug –** Remove this drain plug when draining of the oil from the engine crankcase is required. Fill with recommended type oil as listed in Table 4.
22. **Air Cleaner –** Prevents dirt and other debris from entering the fuel system. Remove wing-nut on top of air filter cannister to gain access to filter element. **NEVER** run the engine without an air cleaner.
23. **Muffler/Heat Shield –** Used to reduce noise and emissions. **NEVER** touch this heat shield when the generator/welder is in use. Always allow time for engine to cool before servicing.
24. **Spark Plug –** Provides spark to the ignition system. Set spark plug gap to 0.6 - 0.7 mm (0.028 - 0.031 inch) Clean spark plug once a week.
25. **Fuel Cock Lever –** Turn this lever downward to start (down)the flow of fuel into the carburetor. Turn upward to stop (up) the flow of fuel.
26. **Choke Lever –** Used for starting the engine. Close the choke lever when starting a cold engine or in cold weather conditions. The choke enriches the fuel mixture. Open the choke lever if starting a warm engine or in warm weather conditions.
27. **Transport Handle –** When transporting of the generator is required, lift up on each handle and engage locking pin. Part of wheel kit assembly
28. **Support Stand –** Supports the generator, part of wheel kit assembly
29. **Foam-Filled Tires –** Provided for ease of transport. Replace with only recommended tires.

NOTICE

This **HONDA** engine is equipped with a low oil shutdown capability. A built in sensor will automatically turn off the engine should the oil level fall below a safe operating condition. Make sure the generators is placed on level ground. Placing the generators on level ground will ensure that the low oil sensor will function properly.

GENERAL INSPECTION PRIOR TO OPERATION

Ground Power Tools

When using power tools or electrical equipment requiring AC power from the generator, make sure power tool cord has a ground pin or is double insulated as shown in Figure 13.

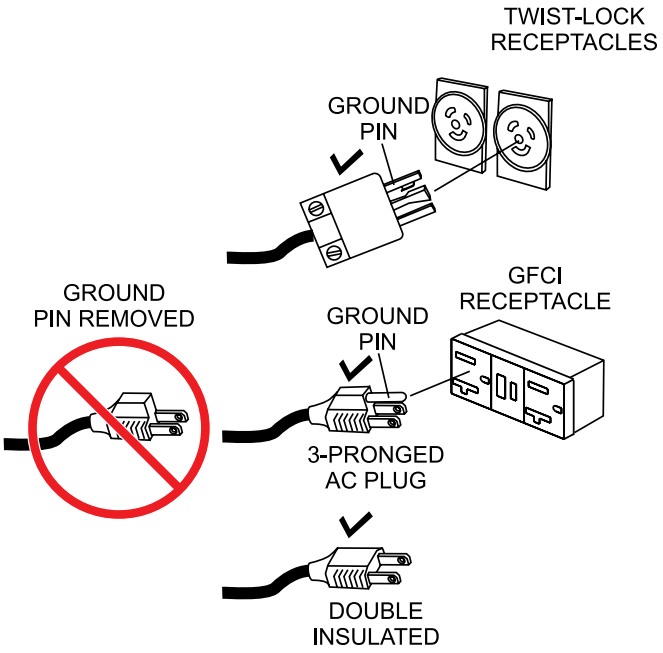

Figure 13. Ground Pin

NOTICE

Double-insulated power tools and small appliances have specially insulated housings that eliminate the need for a ground pin. These types of double-insulated power cords are designed so that no part of the device will be electrically live even if the internal insulation fails.

Extension Cable

When electric power is to be provided to various tools or loads at some distance from the generator, extension cords are normally used. Cables should be sized to allow for distance in length and amperage so that the voltage drop between the generator and point of use (load) is held to a minimum. Use the cable selection chart (Table 4) as a guide for selecting proper cable size.

DANGER

NEVER use power tools or equipment that do not have a ground capability, the possibility exists of electrocution, electrical shock or burn, which can cause severe bodily harm or even **DEATH**!

Table 4. Cable Selection (60 Hz, Single Phase Operation)

Current In Amperes	Load In Watts		Maximum Allowable Cable Length			
	120 Volts	240 Volts	#10 Wire	#12 Wire	#14 Wire	#16 Wire
2.5	300	600	1000 ft.	600 ft.	375 ft.	250 ft.
5	600	1200	500 ft.	300 ft.	200 ft.	125 ft.
7.5	900	1800	350 ft.	200 ft.	125 ft.	100 ft.
10	1200	2400	250 ft.	150 ft.	100 ft.	
15	1800	3600	150 ft.	100 ft.	65 ft.	
20	2400	4800	125 ft.	75 ft.	50 ft.	
CAUTION: Equipment damage can result from low voltage.						

Before Starting

NOTICE

ALWAYS place the main circuit breaker in the **OFF** position prior to starting the engine.

1. Read safety instructions at the beginning of manual.
2. Clean the generator, removing dirt and dust, particularly the engine cooling air inlet, carburetor and air cleaner.
3. Check the air filter for dirt and dust. If air filter is dirty, replace air filter with a new one as required.
4. Check carburetor for external dirt and dust. Clean with dry compressed air.
5. Check fastening nuts and bolts for tightness.
1. Place the battery into the battery cradle and secured with mounting hardware.
2. Connect the positive cable to the positive terminal on the battery first, then connect the negative cable to the negative terminal.

Engine Oil Check

1. To check the engine oil level, place the generator on secure level ground with the engine stopped.
2. Remove the filler dipstick from the engine oil filler hole (Figure 14) and wipe clean.

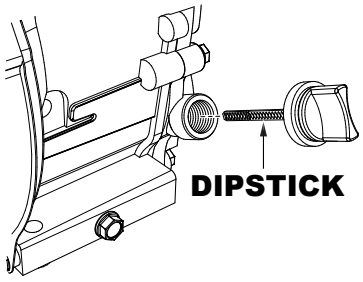

Figure 14. Engine Oil Dipstick Removal

3. Insert and remove the dipstick without screwing it into the filler neck. Check the oil level shown on the dipstick.
4. If the oil level is low (Figure 15), fill to the edge of the oil filler hole with the recommended oil type (Table 5). Maximum oil capacity is 1.16 quarts (1.1 liters).

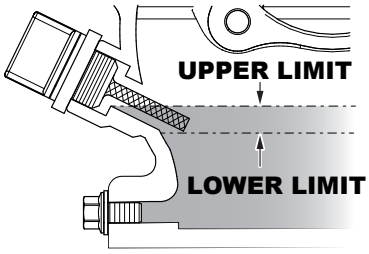

Figure 15. Engine Oil Dipstick(Oil Level)

Table 5. Oil Type

Season	Temperature	Oil Type
Summer	25°C or Higher	SAE 10W-30
Spring/Fall	25°C~10°C	SAE 10W-30/20
Winter	0°C or Lower	SAE 10W-10

Fuel Check

1. Close the fuel cock before filling the fuel tank.
2. Remove the fuel cap located on top of fuel tank.
3. Read the fuel gauge located on top of the fuel tank (Figure 16) to determine if the fuel level is low. If fuel is low, replenish with clean unleaded fuel.

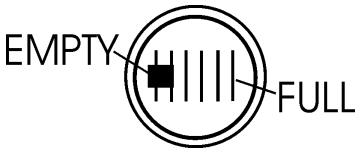

Figure 16. Fuel Gauge

4. When refueling, be sure to use a strainer for filtration. **DO NOT** top-off fuel. **DO NOT** fill the tank beyond capacity. Wipe up any spilled fuel ***immediately!***

This section is intended to assist the operator with the initial start-up of the portable generator. It is extremely important that this section be read carefully before attempting to use the generator in the field.

Before Starting the Engine

NOTICE

Both model generators are equipped with a GFCI sensing module. The purpose of this module is to sense a ground fault during operation of the generator and shut down the generator once the ground fault has been detected.

Multiquip recommends that the GFCI sensing module be tested before each use of the generator. Reference the maintenance section of this manual for the testing of the GFCI sensing module.

1. Be sure to disconnect all electrical loads from the generator prior to starting the engine.
2. **NEVER** start the engine with the main circuit breaker in the **ON** position. Always place circuit breaker (Figure 17) in the **OFF** position before starting.

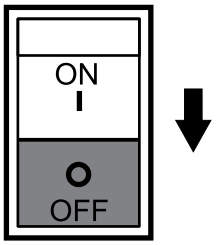

Figure 17. Main Circuit Breaker (OFF)

Starting the Engine (Recoil Start)

1. Place the engine fuel valve lever (Figure 18) in the **ON** position.

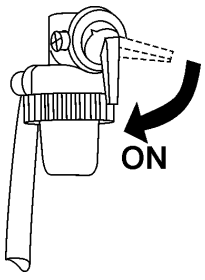

Figure 18. Engine Fuel Valve Lever (ON)

2. Place the choke lever (Figure 19) in the **CLOSED** position if starting a cold engine.

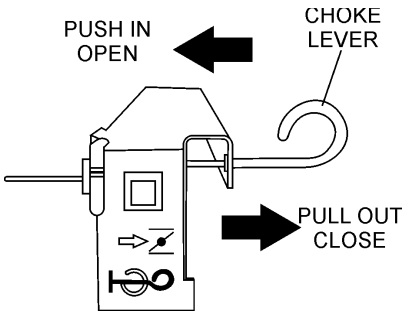

Figure 19. Choke Lever

3. Place the choke lever (Figure 19) in the **OPEN** position if starting a warm engine or the temperature is warm.
4. Place the generator's operation switch (Figure 20) in the **ON** position.

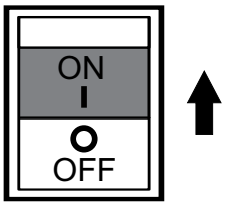

Figure 20. Operation Switch (ON)

5. If your generator is a recoil start only (no battery), grasp the starter grip (Figure 21) and slowly pull it out. The resistance becomes the hardest at a certain position, corresponding to the compression point. Pull the starter grip briskly and smoothly for starting.

   Proceed to step 6 if your unit is an electric start model (battery installed).

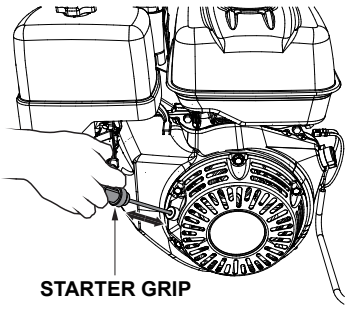

Figure 21. Starter Grip

NOTICE

DO NOT pull the starter rope all the way to the end.

DO NOT release the starter rope after pulling. Allow it to rewind as soon as possible..

6. If the engine has started, slowly return the choke lever (Figure 19) to the **OPEN** position. If the engine has not started repeat steps 1 through 6.

7. Once engine has started, the **GREEN** power LED (Figure 22**A**) on the GFCI sensing module will turn on for 5 seconds. Place the main circuit breaker (Figure 22**B**), in the **ON** position while the **GREEN** power LED is on.

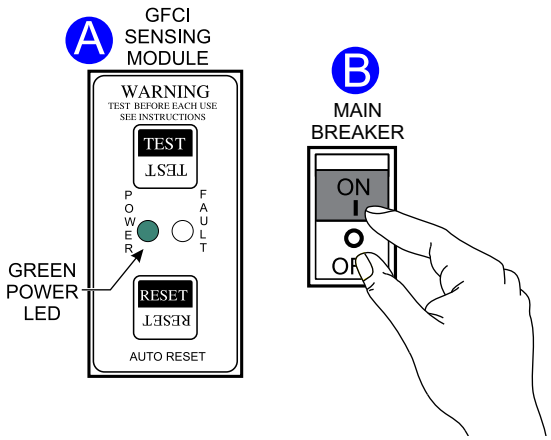

Figure 22. Green Pwr. Status LED (ON)

8. If the main breaker is not turned on within 5 seconds the **RED** fault led on the GFCI sensing module will begin flashing (Figure 24). If this occurs, press the ***reset button*** on the GFCI sensing module.

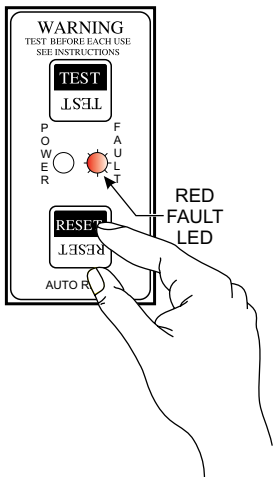

Figure 23. Red Fault Status LED (Flashing)

9. Once the reset button on the GFCI sensing module has been pressed, the **GREEN** power LED will turn on again for 5 seconds. Place the main breaker in the **ON** position while the **GREEN** power LED is **ON**. The generator is ready for operation when the **GREEN** power LED remains **ON**.

10. Before the generator is placed into operation, run the engine for 3-5 minutes. Check for abnormal smells, fuel leaks, and noises that would associate with loose components.

11. Place idle control switch (Figure 24) in the **OFF** position. This will allow the engine speed to run at about 3600 RPM's.

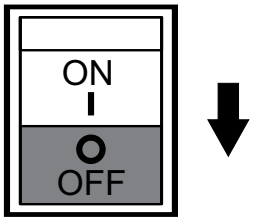

Figure 24. Idle Control Switch (OFF)

NOTICE

Placing the idle control switch in the **OFF** position (Figure 24) allows the engine to operate at a maximum speed of about 3600 RPM's.

When the idle control switch (Figure 25) is placed in the up position (**ON**), the generator will run at idle speed (2500 RPM's) until a load is applied, at that time the engine speed will increase to 3600 RPM's as long as a load is being applied.

When the load is not in use, the engine speed will drop back to the idle mode after about 3 seconds.

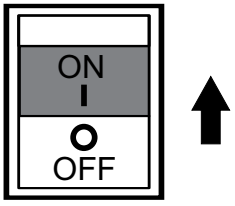

Figure 25. Idle Control switch (ON)

12. Place the full power switch (Figure 26) in the 120V position (up).

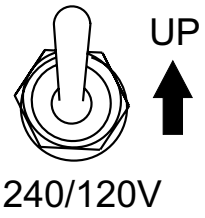

Figure 26. Full Power Switch 120V Position (Up)

> ***NOTICE***
>
> When the full power switch is in the 120V position, the 240V twist-lock receptacle cannot be used.

13. Read voltmeter on front panel of generator (Figure 27) and verify that 120 VAC is displayed. Using an external voltmeter as shown in Figure 27, verify that 120 VAC is present at the 120V twist-lock and GFCI duplex receptacles.

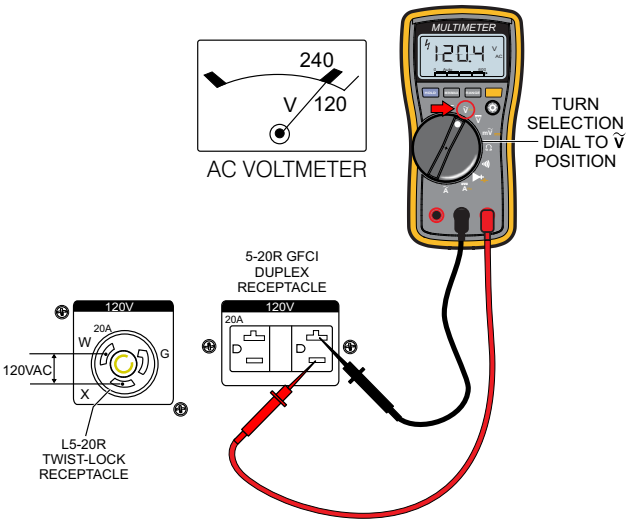

Figure 27. 120V Twist-Lock/GFCI Receptacles

14. Place the full power switch (Figure 28) in the 240/120V position (down).

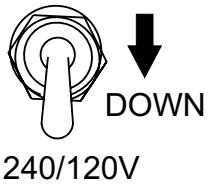

Figure 28. Full Power Switch 240/120V Position (Down)

15. Read voltmeter on front panel of generator (Figure 29) and verify that 240 VAC is displayed. Using an external voltmeter as shown in Figure 29, verify that 240 VAC is present at the 120/240V, L14-30R twist-lock receptacle.

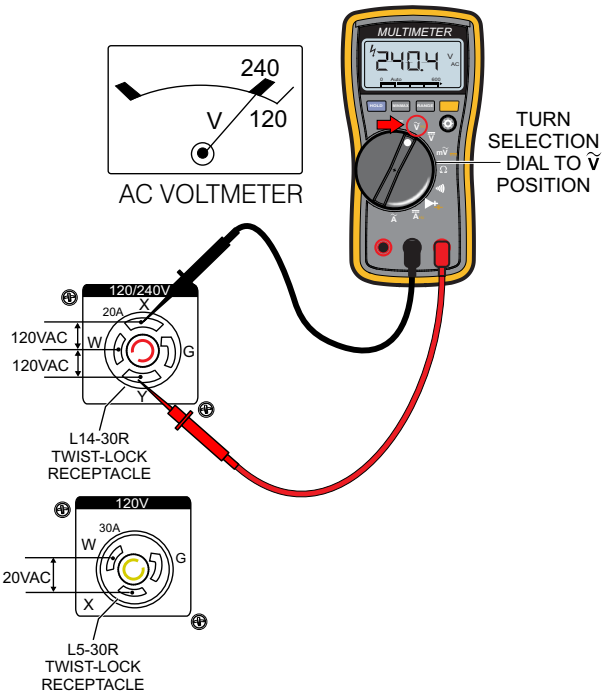

Figure 29. 120/240V L14-30R Receptacle

> ***NOTICE***
>
> When using a combination of dual receptacles, total load should not exceed the rated capacity of the generator.

16. Connecting of loads (power tools, lighting etc.) to the generator receptacles can now be done.

Stopping the Engine (Normal Shutdown)

1. Place main circuit breaker (Figure 30) in the **OFF** position.

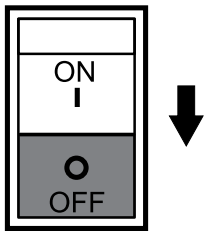

Figure 30. Main Circuit Breaker (OFF)

2. Place idle control switch (Figure 31) in the **OFF** position.

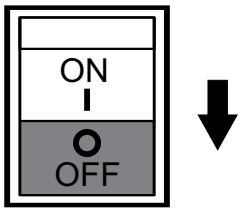

Figure 31. Idle Control switch (OFF)

3. Let engine run at idle with no load for 2-3 minutes.
4. To shut-down the engine, place the generator's operation switch (Figure 32) in the **OF**F position).

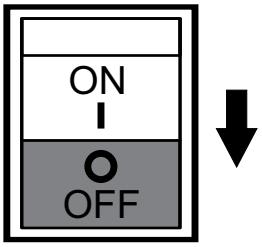

Figure 32. Operation Switch (OFF)

5. Place engine fuel valve lever (Figure 33) in the **OFF** position.

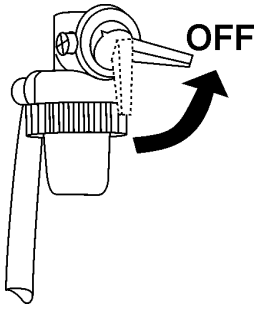

Figure 33. Engine Fuel Valve Lever (OFF)

6. Remove all loads from the generator.

Emergency Shutdown

1. Place operation switch (Figure 34) in the **OFF** position.

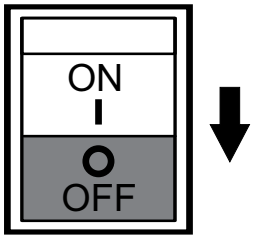

Figure 34. Operation Switch (Emergency)

Generator Storage

For storage of the generating set for over 30 days, the following is required:

- Drain the fuel tank completely, or add STA-BIL to the fuel.
- Run the engine until the gasoline in the carburetor is completely consumed.
- Completely drain the oil from the crankcase and refill with fresh oil.
- Remove the spark plug, pour 2 or 3 cc of SAE 30 oil into the cylinder and crank slowly to distribute the oil.
- Slowly rotate the engine a few times with the starter rope and install a new plug.
- Pull out the starter rope slowly and stop at the compression point.
- Clean all external parts of the generating set with a cloth.
- Cover the generating set and store in a clean, dry place.

Use Table 6 as a general maintenance guideline when servicing your engine. For more detail engine maintenance information, refer to the engine owner's manual supplied with your engine.

Table 6. Engine Maintenance Schedule

DESCRIPTION (3)	OPERATION	BEFORE	FIRST MONTH OR 10 HRS.	EVERY 3 MONTHS OR 25 HRS.	EVERY 6 MONTHS OR 50 HRS.	EVERY YEAR OR 100 HRS.	EVERY 2 YEARS OR 200 HRS.
Engine Oil	CHECK	X					
	CHANGE		X		X	X	X
Air Cleaner	CHECK	X	X				
	CHANGE			X (1)			
Charcoal Canister (4)	REPLACE						
All Nuts & Bolts	RETIGHTEN IF NECESSARY	X					
Spark Plug	CHANGE				X		
	REPLACE						X
Cooling Fins	CHECK				X		
Spark Arrester	CLEAN					X	
Fuel Tank	CLEAN					X	
Fuel Strainer	CHECK				X	X	
Idle Speed	CHECK-ADJUST					X (2)	
Valve Clearance	CHECK-ADJUST			X		X	X (2)
Fuel lines	CHECK	Every 2 years, replace if necessary (2)					

(1) Service more frequently when used in **DUSTY** areas.

(2) These items should be serviced by your service dealer, unless you have the proper tools and are mechanically proficient. Refer to the HONDA Shop Manual for service procedures.

(3) For commercial use, log hours of operation to determine proper maintenance intervals.

(4) Charcoal canister is maintenance free (non-servicable). Replace only if damaged.

MAINTENANCE

Perform the scheduled maintenance procedures as defined by Table 6 on the previous page:

Daily

Thoroughly remove dirt and oil from the engine and control area. Clean or replace the air cleaner elements as necessary. Check and retighten all fasteners as necessary.

Wiring

Inspect the entire generator for bad or worn electrical wiring or connections. If any wiring or connections are exposed (insulation missing) replace wiring immediately.

Piping and Hose Connection

Inspect all piping, oil hose, and fuel hose connections for wear and tightness. Tighten all hose clamps and check fuel or leaks. If any hose (fuel or oil) lines are defective replace them immediately.

Fuel Strainer

1. Thoroughly clean the area around the fuel cap.
2. Remove the fuel cap from the fuel tank.
3. Next, remove, inspect and clean the fuel strainer (Figure 35) with solvent.

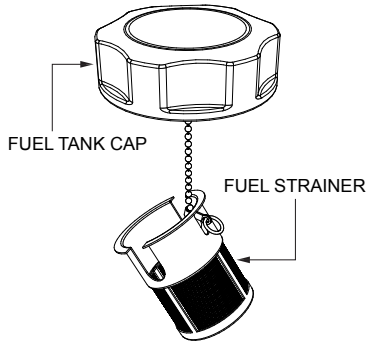

Figure 35. Fuel Strainer

Spark Plug

1. Remove and clean the spark plug (Figure 36), then adjust the spark gap to 0.024 ~0.028 inch (0.6~0.7 mm). This unit has electronic ignition, which requires no adjustments.

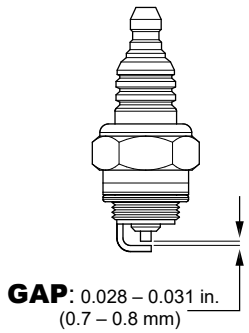

Figure 36. Spark Plug Gap

ENGINE OIL

2. Drain the engine oil when the oil is warm as shown in Figure 37.
3. Remove the oil drain bolt and sealing washer and allow the oil to drain into a suitable container.
4. Replace engine oil with recommended type oil as listed in Table 4. For engine oil capacity, see Table 2 (engine specifications). **DO NOT** overfill.
5. Install drain bolt with sealing washer and tighten securely.

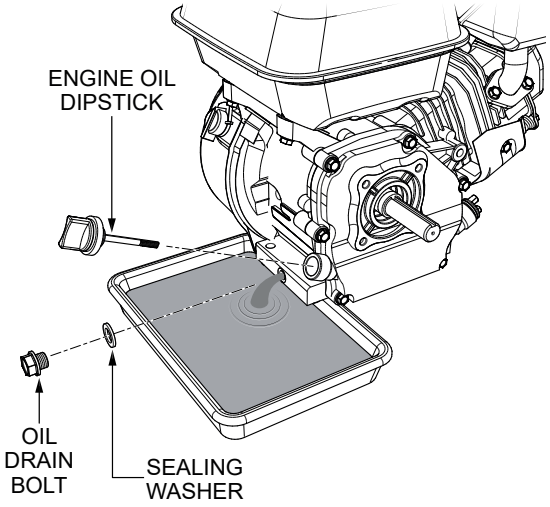

Figure 37. Draining Engine Oil

ENGINE AIR CLEANER

DANGER

DO NOT use gasoline as a cleaning solvent, the possibility exists of fire or explosion which can cause damage to the equipment and severe bodily harm or even **DEATH**!

1. Remove the air cleaner cover and foam filter element as shown in Figure 38.
2. Clean foam element in warm, soapy water or nonflammable solvent. Rinse and dry thoroughly. Dip the element in clean engine oil and completely squeeze out the excess oil from the element before installing.

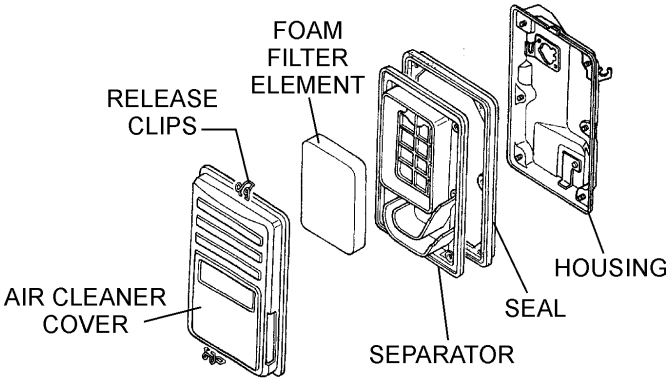

Figure 38. Engine Air Cleaner

3. Clean foam element (Figure 39 in warm, soapy water or non-flammable solvent. Rinse and dry thoroughly.
4. Next, dip the element in clean engine oil and completely squeeze out the excess oil from the element before installing.

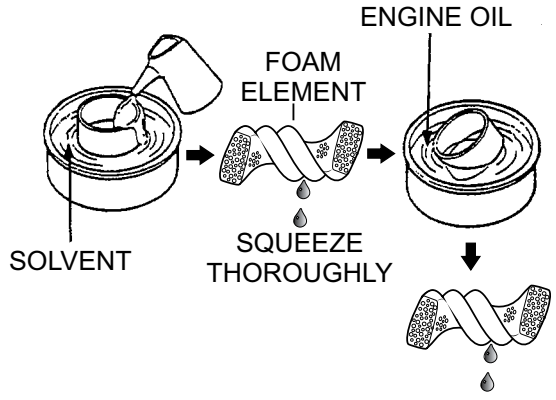

Figure 39. Cleaning Foam Element

SPARK ARRESTER CLEANING

Clean the spark arrester every 6 months or 100 hours.

1. Remove the muffler protector retaining bolts (Figure 40), then remove muffler protector.
2. Next, remove tapping screw that secures spark arrestor to muffler, then remove spark arrester.

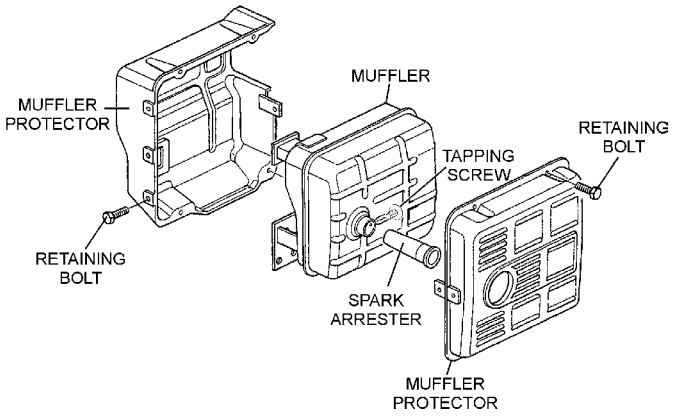

Figure 40. Spark Arrester Removal

3. Carefully remove carbon deposits from the spark arrester screen (Figure 41) with a wire brush.

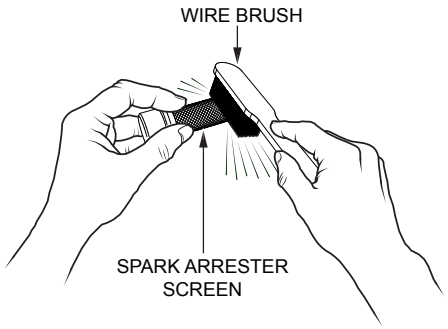

Figure 41. Cleaning The Spark Arrester

4. If the spark arrester is damaged and has breaks or holes, replace with a new one.
5. Reinstall the spark arrester and muffler protector in reverse order of disassembly.

TESTING THE GFCI SENSING MODULE

NOTICE

It is recommended that the GFCI module be tested when the generator is initially taken out of the box. Then, the module should be tested daily at startup.

⚠ CAUTION

The GFCI sensing module is designed to interrupt power when a ground fault exists to prevent injuries and shock hazards. **DO NOT** operate the generator if this test fails. Consult a qualified electrician for repair or replacement of the GFCI sensing module.

NOTICE

NEVER test the GFCI sensing module at low speed (low voltage), running the engine at low speed will damage the GFCI sensing module..

1. Start the generator as outlined in the start up procedure in this manual.
2. Remove all loads from the generator.
3. Press the **RESET** button on the GFCI sensing module (Figure 42) and verify that the **GREEN** power LED is **ON**.

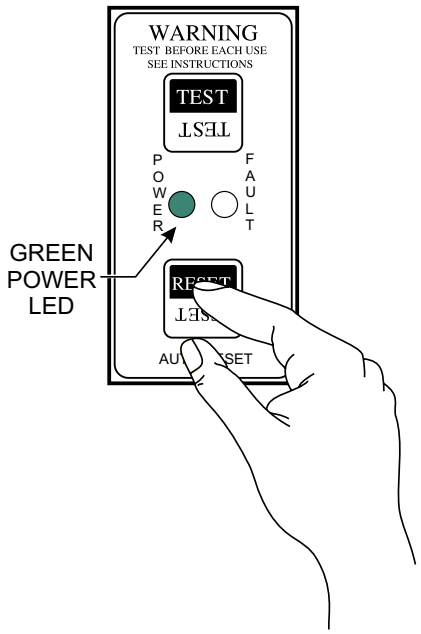

Figure 42. GFCI Sensing Module (Green LED ON)

4. Place main circuit breaker, (Figure 43) in the **ON** position within 5 seconds after pressing the **RESET** button on the GFCI sensing module.

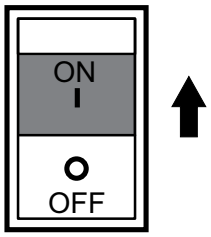

Figure 43. Main Circuit Breaker ON (GFCI Test)

5. Also verify that the AC voltmeter is registering a voltage reading as indicated by Figure 44.

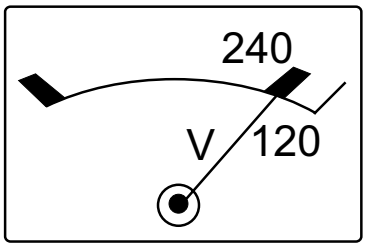

Figure 44. Voltmeter 120/240

6. Next, press the **TEST** button on the GFCI sensing module (Figure 45) and verify that the **GREEN** power LED turns **OFF** and the **RED** fault LED turns **ON**.

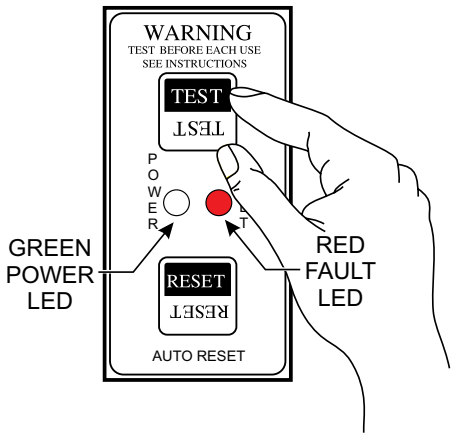

Figure 45. GFCI Sensing Module (Red/Fault LED ON)

7. Also verify that the main circuit breaker (Figure 46) switch trips to the **OFF** position.

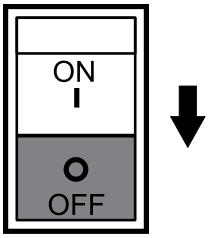

Figure 46. Main Circuit Breaker OFF (GFCI Test)

8. Verify that the AC voltmeter (Figure 47) on the generator reads zero volts.

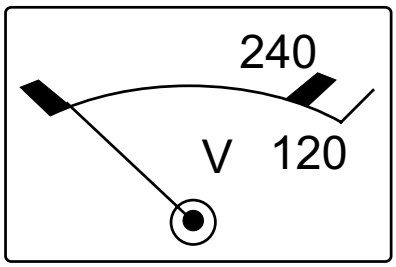

Figure 47. AC Voltmeter (Zero Volts)

9. To restore power, press the **RESET** button (Figure 48) on the GFCI sensing module and verify that the **RED** fault LED turns **OFF** and the **GREEN** power LED turns **ON**.

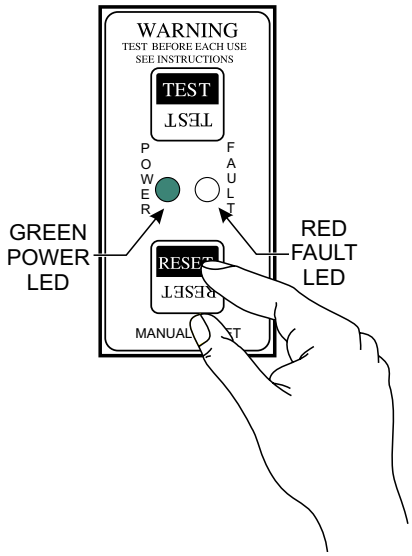

Figure 48. GFCI Sensing Module (Green LED ON Reset)

10. Verify that the AC voltmeter is registering a voltage reading as indicated by Figure 49.

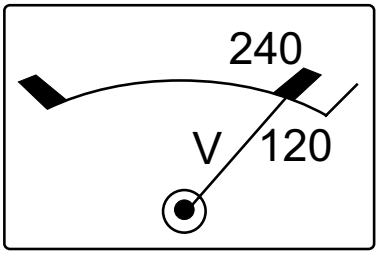

Figure 49. AC Voltmeter (120/240V)

11. If desired, an external voltmeter can also verify that 120/240 VAC is present at the L5-20R, L5-30R, L14-20R twist-lock and 5-20R duplex receptacles as referenced in Figure 27 and Figure 29.

12. Turn off the generator as outlined in the shutdown procedure in this manual.

13. If the GFCI Sensing Module passed testing and the 60 Hz breaker continues to trip with a load connected. Replace the load (electrical equipment/extension cords) with a load that is not shorted or defective.

14. If the GFCI Sensing Module failed this testing procedure, consult a qualified licensed electrican to correct the problem.

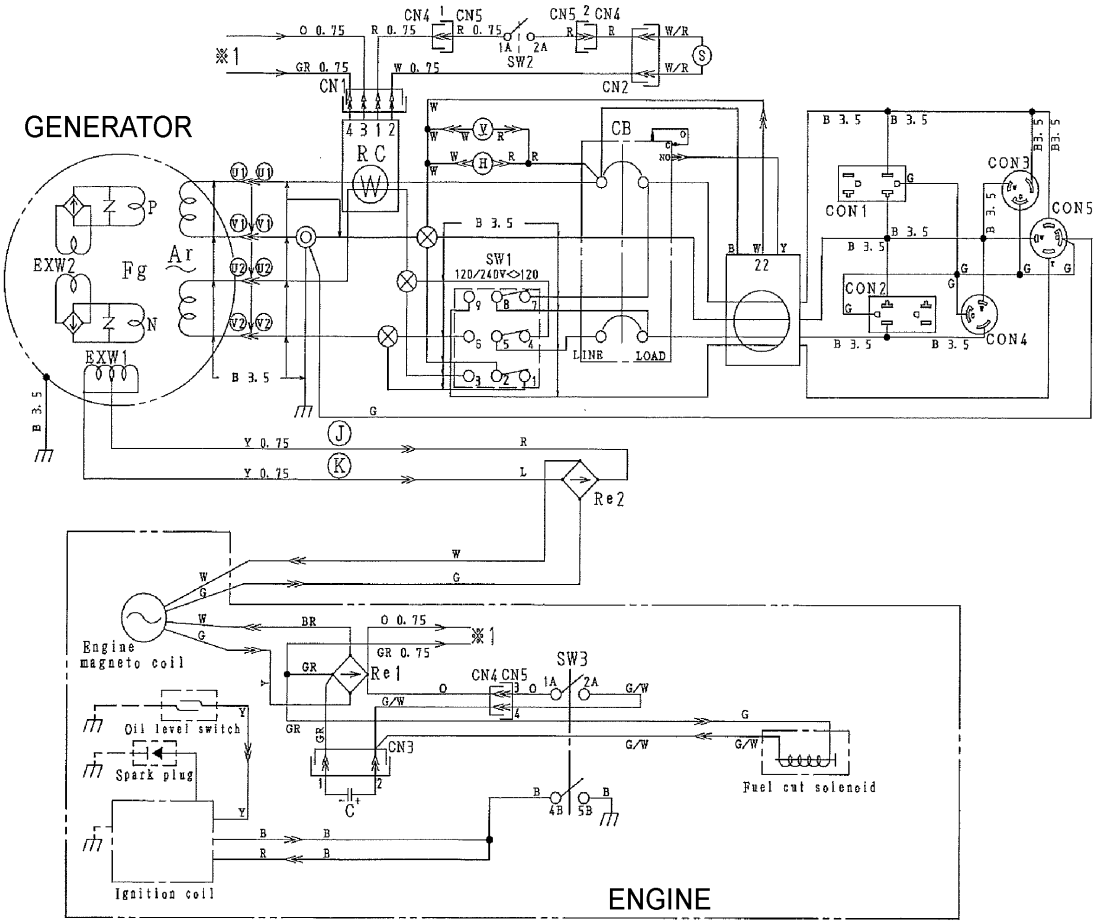

COLOR CODE			
	WIRE COLOR		WIRE COLOR
B	BLACK	R	RED
L	BLUE	W	WHITE
BR	BROWN	Y	YELLOW
G	GREEN	LB	LIGHT BLUE
GR	GRAY	LG	LIGHT GREEN
V	VIOLET	O	ORANGE
P	PINK		

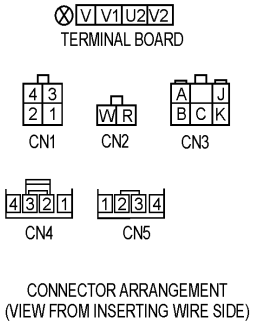

CONNECTOR ARRANGEMENT
(VIEW FROM INSERTING WIRE SIDE)

SYMBOL	DESIGNATION
Ar	ARMATURE WINDING
Fg-P, N	ROTOR ASSEMBLY
Ex W1	EXCITATION WINDING
Ex W2	EXCITATION WINDING
V	AC VOLTMETER 120/240V
RE 1~2	RECTIFER
CB	CIRCUIT BREAKER 23A
CON 1,2	RECEPTACLE 5-20R GFCI 20A, 125V
CON 3	RECEPTACLE L5-20R 20A 125V
CON 4	RECEPTACLE L5-30R 30A, 125/250V
CON 5	RECEPTACLE L14-30R 30A, 125/250V
SW1	FULL POWER SWITCH
SW2	IDLE CONTROL SWITCH
SW3	OPERATION SWITCH
RC	IDLE CONTROL DEVICE
S	IDLE CONTROL SOLENOID
C	CAPACITOR
22	GFCI SENSING MODULE
⊗	TERMINAL BOARD
H	HOUR METER

GENERATOR WIRING DIAGRAM (CO SENSOR)

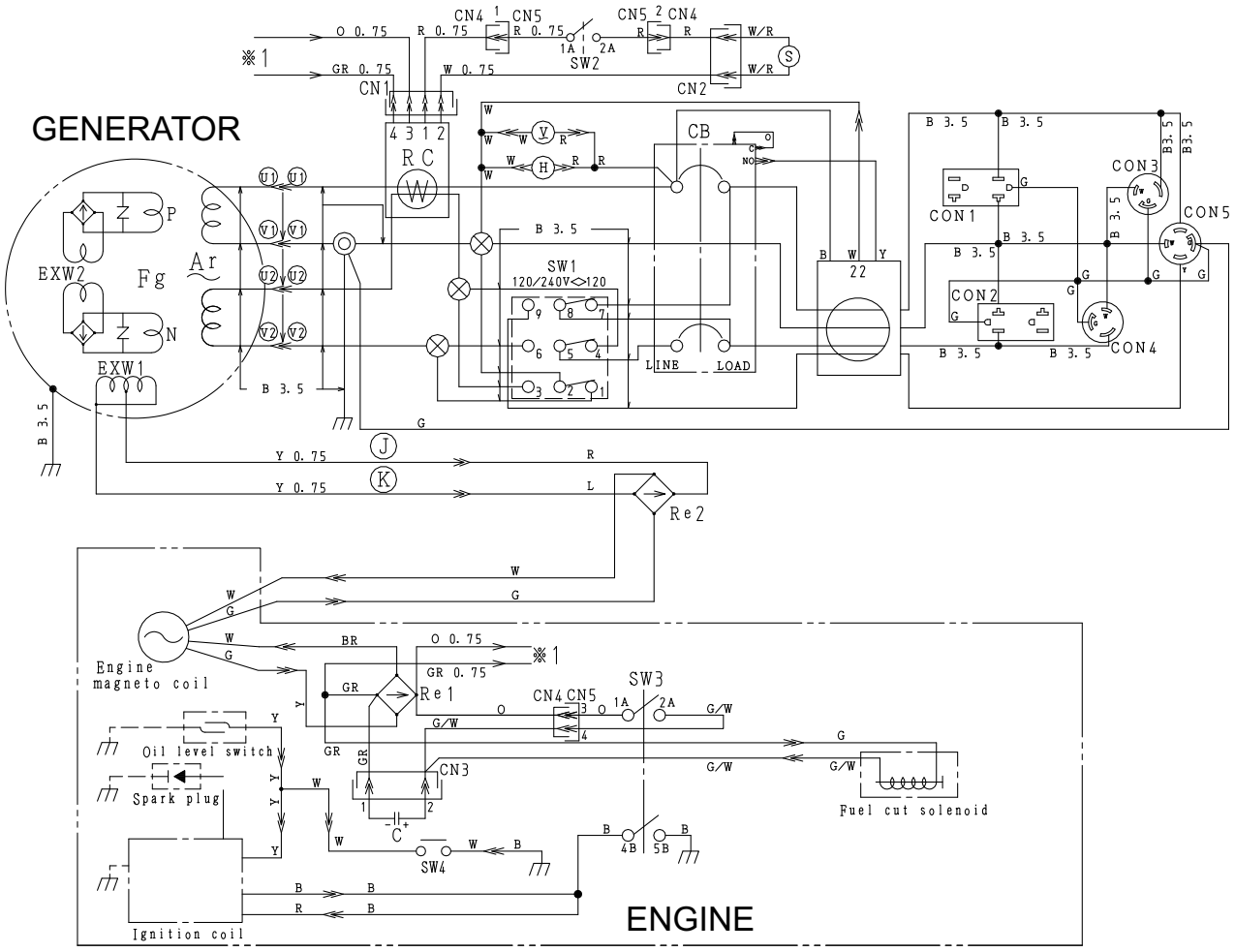

COLOR CODE			
	WIRE COLOR		WIRE COLOR
B	BLACK	R	RED
L	BLUE	W	WHITE
BR	BROWN	Y	YELLOW
G	GREEN	LB	LIGHT BLUE
GR	GRAY	LG	LIGHT GREEN
V	VIOLET	O	ORANGE
P	PINK		

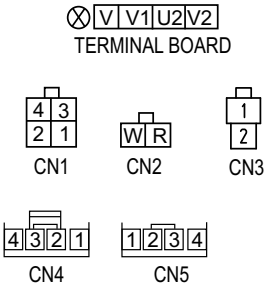

CONNECTOR ARRANGEMENT
(VIEW FROM INSERTING WIRE SIDE)

SYMBOL	DESIGNATION
Ar	ARMATURE WINDING
Fg-P, N	ROTOR ASSEMBLY
Ex W1	EXCITATION WINDING
Ex W2	EXCITATION WINDING
V~	AC VOLTMETER 120/240V
RE 1~2	RECTIFER
CB	CIRCUIT BREAKER 23A
CON 1,2	RECEPTACLE 5-20R GFCI 20A, 125V
CON 3	RECEPTACLE L5-20R 20A 125V
CON 4	RECEPTACLE L5-30R 30A, 125/250V
CON 5	RECEPTACLE L14-30R 30A, 125/250V
SW1	FULL POWER SWITCH
SW2	IDLE CONTROL SWITCH
SW3	OPERATION SWITCH
RC	IDLE CONTROL DEVICE
S	IDLE CONTROL SOLENOID
C	CAPACITOR
22	GFCI SENSING MODULE
⊗	TERMINAL BOARD
H	HOUR METER
SW4	HOUR METER

Troubleshooting (Engine)		
Symptom	**Possible Problem**	**Solution**
Difficult to start, fuel is available, but no spark at spark plug.	Spark plug bridging?	Check gap, insulation or replace spark plug.
	Carbon deposit on spark plug?	Clean or replace spark plug.
	Short circuit due to deficient spark plug insulation?	Check spark plug insulation, replace if worn.
	Improper spark plug gap?	Set to proper gap.
	Spark plug is red?	Check transistor ignition unit.
	Spark plug is bluish white?	If insufficient compression, repair or replace engine. If injected air leaking, correct leak. If carburetor jets clogged, clean carburetor.
	No spark present at tip of spark plug?	Check if transistor ignition unit is broken, and replace defective unit. Check if voltage cord cracked or broken and replace. Check if spark plug is fouled and replace.
	No oil?	Add oil as required.
	Oil pressure alarm lamp blinks upon starting? (if applicable)	Check automatic shutdown circuit, oil sensor. (if applicable)
Difficult to start, fuel is available, and spark is present at the spark plug.	ON/OFF switch is shorted?	Check switch wiring, replace switch.
	Ignition coil defective?	Replace ignition coil.
	Improper spark gap, points dirty?	Set correct spark gap and clean points.
	Condenser insulation worn or short circuiting?	Replace condenser.
	Spark plug wire broken or short circuiting?	Replace defective spark plug wiring.
Difficult to start, fuel is available, spark is present and compression is normal.	Wrong fuel type?	Flush fuel system, replace with correct type of fuel.
	Water or dust in fuel system?	Flush fuel system.
	Air cleaner dirty?	Clean or replace air cleaner.
	Choke open?	Close choke.
Difficult to start, fuel is available, spark is present and compression is low.	Suction/exhaust valve stuck or protruded?	Reseat valves.
	Piston ring and/or cylinder worn?	Replace piston rings and/or piston.
	Cylinder head and/or spark plug not tightened properly?	Torque cylinder head bolts and spark plug.
	Head gasket and/or spark plug gasket damaged?	Replace head and spark plug gaskets.
No fuel present at carburetor.	No fuel in fuel tank?	Fill with correct type of fuel.
	Fuel cock does not open properly?	Apply lubricant to loosen fuel cock lever, replace if necessary.
	Fuel filter/lines clogged?	Replace fuel filter.
	Fuel tank cap breather hole clogged?	Clean or replace fuel tank cap.
	Air in fuel line?	Bleed fuel line.

Troubleshooting (Engine) - continued		
Symptom	**Possible Problem**	**Solution**
Weak in power, compression is proper and does not misfire.	Air cleaner dirty?	Clean or replace air cleaner.
	Improper level in carburetor?	Check float adjustment, rebuild carburetor.
	Defective spark plug?	Clean or replace spark plug.
	Improper spark plug?	Set to proper gap.
Weak in power, compression is proper but misfires.	Water in fuel system?	Flush fuel system and replace with correct type of fuel.
	Dirty spark plug?	Clean or replace spark plug.
	Ignition coil defective?	Replace ignition coil.
Engine overheats.	Wrong type of fuel?	Replace with correct type of fuel.
	Cooling fins dirty?	Clean cooling fins.
	Intake air restricted?	Clear intake of dirt and debris. Replace air cleaner elements as necessary.
	Oil level too low or too high?	Adjust oil to proper level.
Rotational speed fluctuates.	Governor adjusted incorrectly?	Adjust governor.
	Governor spring defective?	Replace governor spring.
	Fuel flow restricted?	Check entire fuel system for leaks or clogs.
Recoil starter malfunctions. (if applicable)	Recoil mechanism clogged with dust and dirt?	Clean recoil assembly with soap and water.
	Spiral spring loose?	Replace spiral spring.
Starter malfunctions.	Loose, damaged wiring?	Ensure tight, clean connections on battery and starter.
	Battery insufficiently charged?	Recharge or replace battery.
	Starter damaged or internally shorted?	Replace starter.
Burns too much fuel.	Over-accumulation of exhaust products?	Check and clean valves. Check muffler and replace if necessary.
	Wrong spark plug?	Replace spark plug with manufacturer's suggested type.
Exhaust color is continuously white.	Lubricating oil is wrong viscosity?	Replace lubricating oil with correct viscosity.
	Worn rings?	Replace rings.
Exhaust color is continuously black.	Air cleaner clogged?	Clean or replace air cleaner.
	Choke valve set to incorrect position?	Adjust choke valve to correct position.
	Carburetor defective, seal on carburetor broken?	Replace carburetor or seal.
	Poor carburetor adjustment, engine runs too rich?	Adjust carburetor.
Will not start, no power with key ON. (if applicable)	ON/OFF device not activated ON?	Turn on ON/OFF device.
	Battery disconnected or discharged?	Check cable connections. Charge or replace battery.
	Ignition switch/wiring defective?	Replace ignition switch. Check wiring.

Troubleshooting (Generator)		
Symptom	**Possible Problem**	**Solution**
Low voltage	Engine speed too low?	Raise engine speed to rated RPM.
Low voltage, 3650 RPM (unloaded), 2500 RPM (idle)	AC voltmeter not working?	Replace Ac voltmeter.
	Control box internal wiring malfunction?	Check control box wiring.
	Rotor winding malfunction?	Check or replace rotor.
	Stator winding malfunction?	Check or replace stator.
	Leakage breaker malfunction?	Check or replace CB1.
	Full power switch malfunction?	Check full power switch and full power switch circuit.
Voltage output too high.	Engine speed too high?	Lower engine speed to rated RPM.
Voltage output too high. Engine speed normal 3650 RPM (unloaded), 2500 RPM (idle)	Control box internal wiring malfunction	Check control box wiring.
Circuit breaker will not turn on "NO LOAD"	Defective circuit breaker?	Replace circuit breaker.
Circuit breaker will not turn on "NO LOAD"	Defective circuit breaker?	Replace circuit breaker.
Circuit breaker will turn on "LOADED" but trips immediately.	Overload Condition?	Reduce load or replace breaker.
	Load circuit is shorted?	Check load circuit for short.
Does not accelerate from low to high "NO LOAD"	Stuck solenoid?	Check solenoid.
	Bad Idle control switch?	Check or replace idle control switch.
Does not accelerate from low to high "LOAD ACTIVE"	Idle control switch malfunction?	Check or replace idle control switch.
	Idle control device malfunction?	Check or replace idle control device.
	Control box interal wiring defective?	Check control box wiring.
Does not decelerate but has "VOLTAGE OUTPUT".	Control box wiring malfunction?	Check control box wiring, replace any defective components.
	Defective solenoid?	Check or replace solenoid.
	Idle control device malfunction?	Check or replace idle control device.

OPERATION MANUAL

HERE'S HOW TO GET HELP

PLEASE HAVE THE MODEL AND SERIAL NUMBER ON HAND WHEN CALLING

UNITED STATES

Multiquip Inc.

(310) 537- 3700
6141 Katella Avenue Suite 200
Cypress, CA 90630
E-MAIL: mq@multiquip.com
WEBSITE: www.multiquip.com

CANADA

Multiquip

(450) 625-2244
4110 Industriel Boul.
Laval, Quebec, Canada H7L 6V3
E-MAIL: infocanada@multiquip.com

UNITED KINGDOM

Multiquip (UK) Limited Head Office

0161 339 2223
Unit 2, Northpoint Industrial Estate, Globe Lane,
Dukinfield, Cheshire SK16 4UJ
E-MAIL: sales@multiquip.co.uk

© COPYRIGHT 2025, MULTIQUIP INC.

Multiquip Inc., the MQ logo and the MQ Power logo are registered trademarks of Multiquip Inc. and may not be used, reproduced, or altered without written permission. All other trademarks are the property of their respective owners and used with permission.

This manual MUST accompany the equipment at all times. This manual is considered a permanent part of the equipment and should remain with the unit if resold.

DISCLAIMER: Product features, descriptions, and specifications are based on published information at the time of publication and are subject to change at any time without notice. Multiquip Inc. and its affiliates reserve the right to change specifications, features, design, and descriptions of products at any time without notice.

Manufactured for
MQ Power Inc.
by
DENYO MANUFACTURING CORP.