OPERATION MANUAL

MULTIQUIP®

WHITEMAN

MODEL CA4HC
WALK-BEHIND TROWEL

(HONDA GX120 GASOLINE ENGINE S/N RC0158421 AND BELOW)
(HONDA GX160 GASOLINE ENGINE S/N RC0158422 AND ABOVE)

Revision #2 (03/28/24)

To find the latest revision of this publication or associated parts manual, visit our website at:
www.multiquip.com



THIS MANUAL MUST ACCOMPANY THE EQUIPMENT AT ALL TIMES.

PN: 21768


WARNING
CANCER &
REPRODUCTIVE HARM
www.P65Warnings.ca.gov
P/N 38707

⚠ WARNING



SILICOSIS WARNING

Grinding/cutting/drilling of masonry, concrete, metal and other materials with silica in their composition may give off dust or mists containing crystalline silica. Silica is a basic component of sand, quartz, brick clay, granite and numerous other minerals and rocks. Repeated and/or substantial inhalation of airborne crystalline silica can cause serious or fatal respiratory diseases, including silicosis. In addition, California and some other authorities have listed respirable crystalline silica as a substance known to cause cancer. When cutting such materials, always follow the respiratory precautions mentioned above.

⚠ WARNING



RESPIRATORY HAZARDS

Grinding/cutting/drilling of masonry, concrete, metal and other materials can generate dust, mists and fumes containing chemicals known to cause serious or fatal injury or illness, such as respiratory disease, cancer, birth defects or other reproductive harm. If you are unfamiliar with the risks associated with the particular process and/or material being cut or the composition of the tool being used, review the material safety data sheet and/or consult your employer, the material manufacturer/supplier, governmental agencies such as OSHA and NIOSH and other sources on hazardous materials. California and some other authorities, for instance, have published lists of substances known to cause cancer, reproductive toxicity, or other harmful effects.

Control dust, mist and fumes at the source where possible. In this regard use good work practices and follow the recommendations of the manufacturers or suppliers, OSHA/NIOSH, and occupational and trade associations. Water should be used for dust suppression when wet cutting is feasible. When the hazards from inhalation of dust, mists and fumes cannot be eliminated, the operator and any bystanders should always wear a respirator approved by NIOSH/MSHA for the materials being used.

CA4HC Walk-Behind Trowel

Proposition 65 Warning 2
Silicosis/Respiratory Warnings 3
Table of Contents 4
Training Checklist 5
Daily Pre-Operation Checklist 6
Safety Information 7–12
Lifting and Transporting 13
Specifications 14–15
Dimensions 16
General Information 17
Components (Trowel) 18–19
Components (Engine) 20
Setup 21–24
Inspection 25–26
Operation 27–30
Options 31–32
Maintenance 33–39
Troubleshooting (Trowel) 40–41
Troubleshooting (Engine) 42–43

NOTICE

Equipment specifications and features are subject to change without notice.

Training Checklist			
No.	**Description**	**OK?**	**Date**
1	Read operation manual completely.		
2	Machine layout, location of components, checking of engine oil level.		
3	Fuel system, refueling procedure.		
4	Operation of controls (machine not running).		
5	Safety controls, safety stop switch operation.		
6	Emergency stop procedures.		
7	Startup of machine, engine choke.		
8	Maintaining a hover.		
9	Maneuvering.		
10	Pitching.		
11	Concrete finishing techniques.		
12	Shutdown of machine.		
13	Lifting of machine (lifting bail).		
14	Machine transport and storage.		

DAILY PRE-OPERATION CHECKLIST

Daily Pre-Operation Checklist		✓	✓	✓	✓	✓	✓
1	Engine oil level						
2	Gearbox oil level						
3	Condition of blades						
4	Blade pitch operation						
5	Safety stop switch operation						

DO NOT operate or service the equipment before reading the entire manual. Safety precautions should be followed at all times when operating this equipment. Failure to read and understand the safety messages and operating instructions could result in injury to yourself and others.



SAFETY MESSAGES

The four safety messages shown below will inform you about potential hazards that could injure you or others. The safety messages specifically address the level of exposure to the operator and are preceded by one of four words: **DANGER, WARNING, CAUTION** or **NOTICE.**

SAFETY SYMBOLS

DANGER

Indicates a hazardous situation which, if not avoided, **WILL** result in **DEATH** or **SERIOUS INJURY**.

WARNING

Indicates a hazardous situation which, if not avoided, **COULD** result in **DEATH** or **SERIOUS INJURY**.

CAUTION

Indicates a hazardous situation which, if not avoided, **COULD** result in **MINOR** or **MODERATE INJURY**.

NOTICE

Addresses practices not related to personal injury.

Potential hazards associated with the operation of this equipment will be referenced with ***hazard symbols*** which may appear throughout this manual in conjunction with safety messages.

Symbol	Safety Hazard
	Lethal exhaust gas hazards
	Explosive fuel hazards
	Burn hazards
	Rotating parts hazards
	Pressurized fluid hazards

SAFETY DECALS

Decals associated with the safe operation of this equipment are defined below:

DECAL	DEFINITION
	**WARNING** Cancer and Reproductive Harm This equipment may contain or produce chemicals and substances known to cause cancer, birth defects and other reproductive harm. **ALWAYS** work in a well-ventilated area and **ALWAYS** wear approved safety equipment.
	**DANGER** Rotating Blade Hazard Keep hands, fingers, and feet clear of engine fan blades and guard rings. Moving parts can cut. **DO NOT** remove guards. Stop engine before servicing.
	**DANGER** Training This machine to be operated by qualified personnel only. Ask for training as needed.
	**DANGER** Belt Guard Hazard **DO NOT** remove belt guards. Keep hands and fingers clear from engine belts. Moving parts can crush.
	**WARNING** Lifting/Crush Hazard **NEVER** allow any person to stand underneath the trowel while lifting. **DO NOT** lift trowel with pans attached. **ALWAYS** make sure handle is securely attached.
	**NOTICE** Read Manual To avoid injury, you must read and understand the operator's manual before using this machine.
	**NOTICE** Protective Clothing **ALWAYS** wear appropriate clothing when operating the trowel.
	**NOISE LEVEL** Indicates value of the sound power of the equipment measured at operator's seat.

GENERAL SAFETY

⚠ CAUTION

- **DO NOT** operate this equipment without proper protective clothing, shatterproof glasses, respiratory protection, hearing protection, steel-toed boots and other protective devices required by the job or city and state regulations.



- Avoid wearing jewelry or loose-fitting clothes that may snag on the controls or moving parts as this can cause serious injury.
- **DO NOT** operate this equipment when not feeling well due to fatigue, illness, or when on medication.



- **DO NOT** operate this equipment under the influence of drugs or alcohol.



- **ALWAYS** clear the work area of any debris, tools, etc. that would constitute a hazard while the equipment is in operation.
- **NO ONE** other than the operator is to be in the working area while the equipment is in operation.
- **NEVER** use the equipment for any purpose other than its intended purposes or applications.

NOTICE

- This equipment should only be operated by trained and qualified personnel 18 years of age and older.
- Replace nameplate, operation and safety decals whenever they become difficult to read.
- Manufacturer does not assume responsibility for any accident due to equipment modifications. Unauthorized equipment modification will void all warranties.
- **DO NOT** use accessories or attachments that are not recommended by Multiquip for this equipment. Damage to the equipment and/or injury to the user may result.
- **ALWAYS** know the location of the nearest **fire extinguisher**.



- **ALWAYS** know the location of the nearest **first aid kit**.



- **ALWAYS** know the location of the nearest phone or **keep a phone on the job site**. Also, know the phone numbers of the nearest **ambulance, doctor** and **fire department.** This information will be invaluable in the case of an emergency.

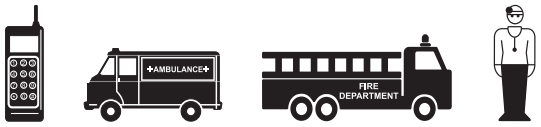

TROWEL SAFETY

⚠ DANGER

- Engine fuel exhaust gases contain poisonous carbon monoxide. This gas is colorless and odorless, and can cause **death** if inhaled.
- The engine of this equipment requires an adequate free flow of cooling air. **NEVER** operate this equipment in any enclosed or narrow area where the free flow of air is restricted. If the air flow is restricted it will cause injury to people and property and serious damage to the equipment or engine.

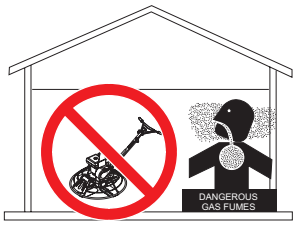

- **NEVER** operate the equipment in an explosive atmosphere or near combustible materials. An **explosion or fire** could result causing **severe bodily harm or even death**.



⚠ WARNING

- **ALWAYS** keep clear of rotating or moving parts while operating the trowel.



- **DO NOT** start or operate the trowel if the drive train will not disengage. Centrifugal force between the trowel and surface when starting can cause uncontrolled handle movement that can cause serious injury. The handle must not move while pulling the engine recoil starter.
- **NEVER** disconnect any **emergency or safety devices.** These devices are intended for operator safety. Disconnection of these devices can cause **severe injury, bodily harm or even death**. Disconnection of any of these devices will void all warranties.

⚠ CAUTION

- **DO NOT** stand on the trowel during operation.
- **NEVER** lubricate components or attempt service on a running machine.
- **DO NOT** place your feet or hands inside the guard rings while starting or operating this equipment.

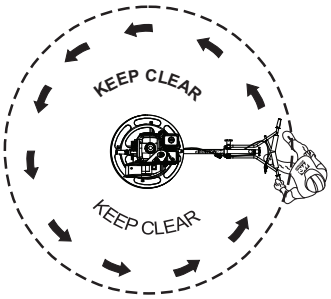

- **ALWAYS** keep the work area clear around the trowel. Make sure it is free of debris and objects.

NOTICE

- **ALWAYS** keep the trowel in proper running condition.
- Fix damage to the trowel and replace any broken parts immediately.
- **ALWAYS** store equipment properly when it is not being used. Equipment should be stored in a clean, dry location out of the reach of children and unauthorized personnel.
- A safety manual for operating and maintenance personnel of concrete power trowels produced by the Association of Equipment Manufacturers (AEM) can be obtained for a fee by ordering through their website at www.aem.org. Order Form PT-160.

ENGINE SAFETY

⚠ WARNING

- **DO NOT** place hands or fingers inside the engine compartment while the engine is running.
- **DO NOT** operate the engine with heat shields or guards removed.
- Keep fingers, hands, hair and clothing away from all moving parts to prevent injury.



- **DO NOT** remove the engine oil drain plug while the engine is hot. Allow the oil to cool before performing maintenance. This will prevent scalding of personnel.

⚠ CAUTION

- **NEVER** touch the hot exhaust manifold, muffler, or cylinder. Allow these parts to cool before servicing the equipment.



NOTICE

- **DO NOT** run the engine without an air filter or with a dirty air filter. Severe engine damage may occur. Service the air filter frequently to prevent engine malfunction.
- **NEVER** tamper with the factory settings of the engine or engine governor. Damage to the engine or equipment can result if operating in speed ranges above the maximum allowable.



FUEL SAFETY

DANGER

- **DO NOT** add fuel to the equipment if it is placed inside a truck bed with a plastic liner. The possibility exists of **explosion or fire** due to static electricity.

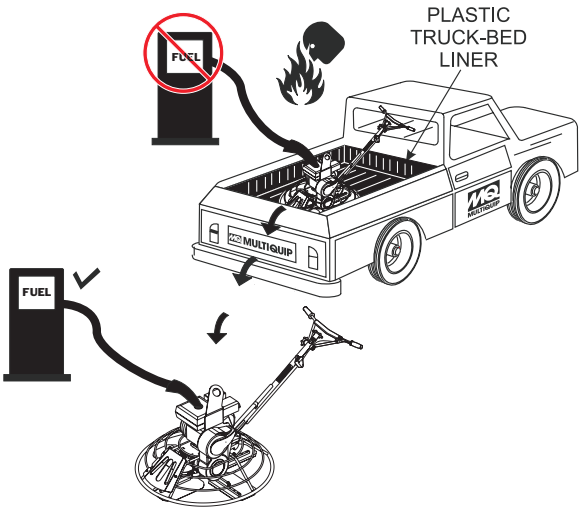

- **DO NOT** start the engine near spilled fuel or combustible fluids. Fuel is **extremely flammable** and its vapors can cause an **explosion** if ignited.
- **ALWAYS** refuel in a well-ventilated area, away from sparks and open flames.
- **ALWAYS** use extreme caution when working with **flammable** liquids.
- **DO NOT** fill the fuel tank while the engine is running or hot.
- **NEVER** overfill the fuel tank. Spilled fuel can ignite if it comes into contact with hot engine parts or sparks from the ignition system.
- Store fuel in appropriate containers, in well-ventilated areas, away from sparks and flames.
- **NEVER** use fuel as a cleaning agent.
- **NEVER** smoke around or near the equipment. Fire or explosion could result from fuel vapors or if fuel is spilled on a hot engine.



TRANSPORTING SAFETY

WARNING

- **DO NOT** allow any person or animal to stand underneath the equipment while it is being lifted.



NOTICE

- Some walk-behind trowels can be lifted or moved by two people utilizing lifting tubes or other special attachments. Generally, however, they must be lifted using lifting bails and cranes, hoists, or forklifts.
- **DO NOT** transport the trowel with float pans attached unless safety catches are used and are specifically cleared for such transport by the manufacturer.
- **DO NOT** hoist the trowel more than three feet off the ground with float pans attached.
- **ALWAYS** make sure that the lifting bail is not damaged before lifting.
- **ALWAYS** make sure the crane or lifting device has been properly secured to the lifting bail of the equipment.
- **ALWAYS** shut down the engine before transporting.
- **DO NOT** lift the equipment while the engine is running.
- Tighten the fuel tank cap securely and close the fuel cock to prevent fuel from spilling during transport.
- Use adequate lifting cable (wire or rope) of sufficient strength.
- **NEVER** lift the machine to unnecessary heights.
- **ALWAYS** tie down the equipment securely with rope during transport.

ENVIRONMENTAL SAFETY/DECOMMISSIONING

NOTICE

Decommissioning is a controlled process used to safely retire a piece of equipment that is no longer serviceable. If the equipment poses an unacceptable and unrepairable safety risk due to wear or damage or is no longer cost effective to maintain (beyond life-cycle reliability) and is to be decommissioned (demolition and dismantlement), be sure to follow the rules below.

- **DO NOT** pour waste or oil directly onto the ground, down a drain or into any water source.
- Contact your country's Department of Public Works or the recycling agency in your area and arrange for proper disposal of any electrical components, waste, or oil associated with this equipment.



- When the life cycle of this equipment is over, remove the battery and bring it to an appropriate facility for lead reclamation. Use safety precautions when handling batteries that contain sulfuric acid.
- When the life cycle of this equipment is over, it is recommended that the trowel frame and all other metal parts be sent to a recycling center.

  Metal recycling involves the collection of metal from discarded products and its transformation into raw materials to use in manufacturing a new product.

  Recyclers and manufacturers alike promote the process of recycling metal. Using a metal recycling center promotes energy cost savings.

EMISSIONS INFORMATION

NOTICE

The gasoline engine used in this equipment has been designed to reduce harmful levels of carbon monoxide (CO), hydrocarbons (HC), and nitrogen oxides (NOx) contained in gasoline exhaust emissions.

This engine has been certified to meet US EPA evaporative emissions requirements in the installed configuration.

Attempts to modify or make adjustments to the engine emission system by unauthorized personnel without proper training could damage the equipment or create an unsafe condition.

Additionally, modifying the fuel system may adversely affect evaporative emissions, resulting in fines or other penalties.

Emission Control Label

The emission control label is an integral part of the emission system and is strictly regulated.

The label must remain with the engine for its entire life.

If a replacement emission label is needed, please contact your authorized engine distributor.

LIFTING THE TROWEL

WARNING

Extra care should be taken when lifting the trowel. **Serious personal injury** or damage to the equipment can be caused by a dropped trowel.

WARNING

NEVER attempt to lift the trowel alone. **NEVER** lift the trowel by the guard ring, as the trowel may rotate and cause injury.

ALWAYS make sure the handle is secure, and use only the manufacturer's approved lifting point. The trowel may be lifted by the center lifting bail using a crane or other device with adequate lifting capacity.

WARNING

NEVER lift the trowel to unnecessary heights.

NEVER stand underneath the trowel while it is being lifted.

Lifting Bail

The lifting bail provides an optimal lift point for the trowel. When lifting the trowel onto a concrete slab, attach a chain or rope to the lifting bail. **MAKE SURE** the capacity of the lifting device is sufficient for the weight of the trowel.

Using a crane or forklift to lift the trowel (Figure 1) is **highly recommended**, and is perfectly safe for the trowel. **ALWAYS** use extra care when lifting the trowel.

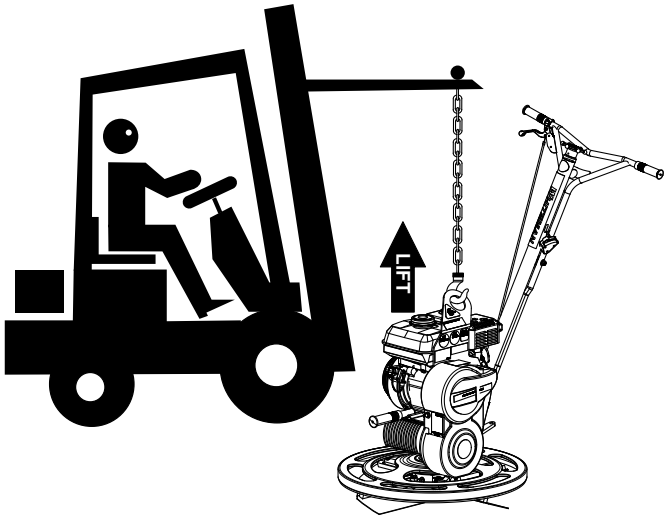

Figure 1. Lifting the Trowel

Table 1. CA4HC Trowel Specifications	
Number of Blades	4
Ring Diameter	24 in. (610 mm)
Rotor Speed	70–130 rpm
Path Width	24 in. (610 mm)
Operating Weight	125 lb. (57 kg)
Gearbox Oil Capacity	22 oz. (828 ml)
Gearbox Oil Type	Chevron Cetus HiPerSYN 460

Table 2. Honda Engine Specifications		
Model	Honda GX120UT3QX2	Honda GX160UT2QX2
Type	Air-cooled, 4-stroke, overhead valve, gasoline engine	
Bore × Stroke	2.4 in. × 1.7 in. (60 mm × 42 mm)	2.7 in. × 1.8 in. (69 mm × 46 mm)
Displacement	118 cm³	163 cm³
Net Power Output	3.5 hp (2.6 kW) @ 3,600 rpm	4.8 hp (3.58 kW) @ 3,600 rpm
Net Torque	5.4 lbf·ft (7.3 N·m) @ 2,500 rpm	7.6 lbf·ft (10.3 N·m) @ 2,500 rpm
PTO Shaft Rotation	Counterclockwise (from PTO shaft side)	
Compression Ratio	8.5:1	9.0:1
Carburetor	Butterfly	
Ignition System	Transistorized magneto	
Starting Method	Recoil starter	
Lubrication System	Splash	
Lube Oil Capacity	0.59 qt. (0.56 liters)	0.61 qt. (0.58 liters)
Lube Oil Type	4-stroke API, SJ or later (or equivalent) 10W-30 general use	
Speed Control Method	Mechanical	
Air Cleaner	Dual element	
Fuel Tank Capacity	2.1 quarts (2.0 liters)	
Fuel	Unleaded 86 octane or higher gasoline	
Dimensions (L × W × H)	11.7 × 13.6 × 13.0 in. (297 × 346 × 329 mm)	12.2 × 14.3 × 13.6 in. (312 × 362 × 346 mm)
Dry Net Weight	29 lb. (13 kg)	33 lb. (15.1 kg)

Table 3. CA4HC Noise and Vibration Emissions		
Engine	GX120	GX160
Guaranteed ISO 11201:2010 Based Sound Pressure Level at Operator Station in dB(A)[a]	83.5	87
Guaranteed ISO 3744:2010 Based Sound Power Level in dB(A)[b]	97	108
Hand-Arm Vibration Per ISO 5349-1:2001 in m/s²	3.86	1.1

NOTES:

1. Sound pressure and power levels are “A” weighted measures per ISO 3744:2010. They are measured under operating conditions of the machine which generate the most repeatable but highest values of the sound levels. Under normal circumstances, the sound level will vary depending on the condition of the material being worked upon.
2. The vibration level indicated is the vector sum of the RMS (root mean square) values of amplitudes on each axis, standardized to an 8-hour exposure period, and obtained using the operating condition of the machine that generates the most repeatable but highest values in accordance with the applicable standards for the machine.
3. Per EU Directive 2002/44/EC, the daily exposure action value for hand/arm vibration is 2.5 m/s² ∑A(8). The daily exposure limit value is 5 m/s² ∑A(8).

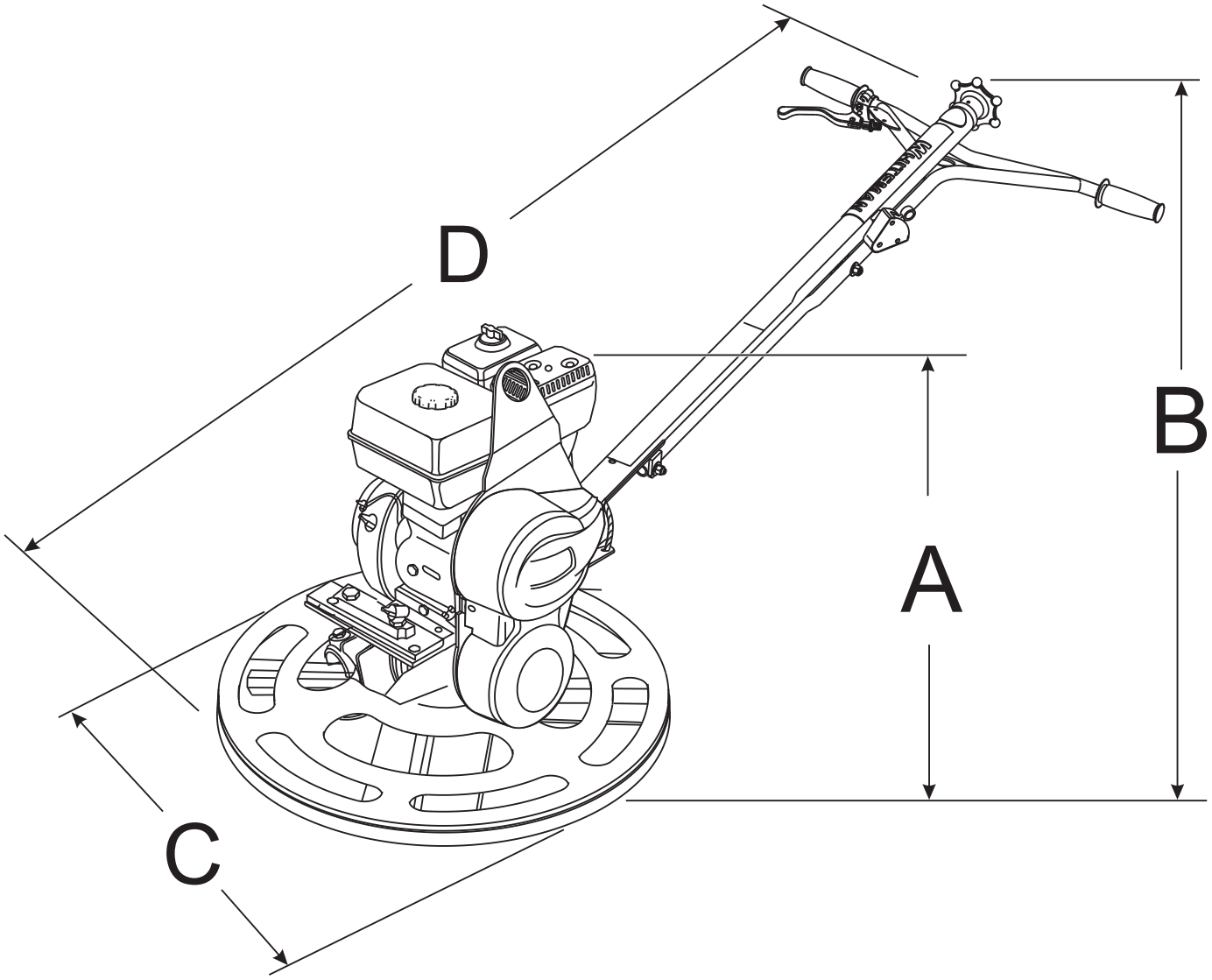

Figure 2. CA4HC Dimensions

Table 4. CA4HC Dimensions	
(A) Height (Lifting Bail)	28.0 in. (711 mm)
(B) Height (Handle)	36.3 in. (921 mm)
(C) Width	24.0 in. (610 mm)
(D) Length	61.2 in. (1,555 mm)

INTENDED USE

Operate this trowel, its components and tools in accordance with the manufacturer's instructions. Use of any other tools for stated operation is considered contrary to designated use. The risk of such use lies entirely with the user. The manufacturer cannot be held liable for damages as a result of misuse.

TROWEL FAMILIARIZATION

Read all safety instructions carefully. Safety instructions will be found throughout this manual and on the trowel. Keep all safety information in good, readable condition. Operators should be well trained on the operation and maintenance of the trowel.

This walk-behind trowel is designed for the floating and finishing of concrete slabs.

Walk around the trowel and take notice of all the major components (Figure 3)—the engine, blades, steering handle, gearbox, etc. Make sure there is always oil in the engine.

Before using your trowel, test it on a flat, watered-down section of finished concrete that is free of debris and other objects.

This trial test run will increase your confidence in using the trowel and will familiarize you with the trowel's controls. You will learn how the trowel handles under actual conditions.

Engine

This trowel is equipped with a Honda gasoline engine (Figure 4). Refer to the engine owner's manual for instructions regarding the operation and maintenance of your engine. If the original engine manual becomes lost or damaged, please contact your nearest Multiquip dealer for a replacement.

Drive System

Power is transferred from the engine to the gearbox input shaft via a V-belt pulley drive system. The pulley engages a centrifugal clutch.

Gearbox

The gearbox is located beneath the engine and transfers power to the spider assembly. The gearbox controls the rotational speed of the trowel and is equipped with two shafts (input and output).

Spider

The vertical output shaft of the gearbox connects to a cast hub called the spider. The spider has four arms that extend outward, to which blades or float pans are attached. As the gearbox output shaft rotates, so does the spider assembly.

Blades

This trowel comes equipped with four 8-inch wide combination float/finish blades, equally spaced in a radial pattern, attached to the vertical rotating shaft by means of the spider assembly. The blades of the trowel finish concrete as they are rotated across the surface.

Rotating Guard Ring

This trowel is equipped with a special rotating guard ring. It is designed to allow the operator to run the unit alongside walls, pipes and obstructions without marring the surface.

Centrifugal Clutch

This trowel is equipped with a centrifugal clutch. The unit automatically stops rotating when the handle is released.

TRAINING

For proper training, please use the ***Training Checklist*** form located in the front of this manual. This checklist will provide an outline for an experienced operator to provide training to a new operator.

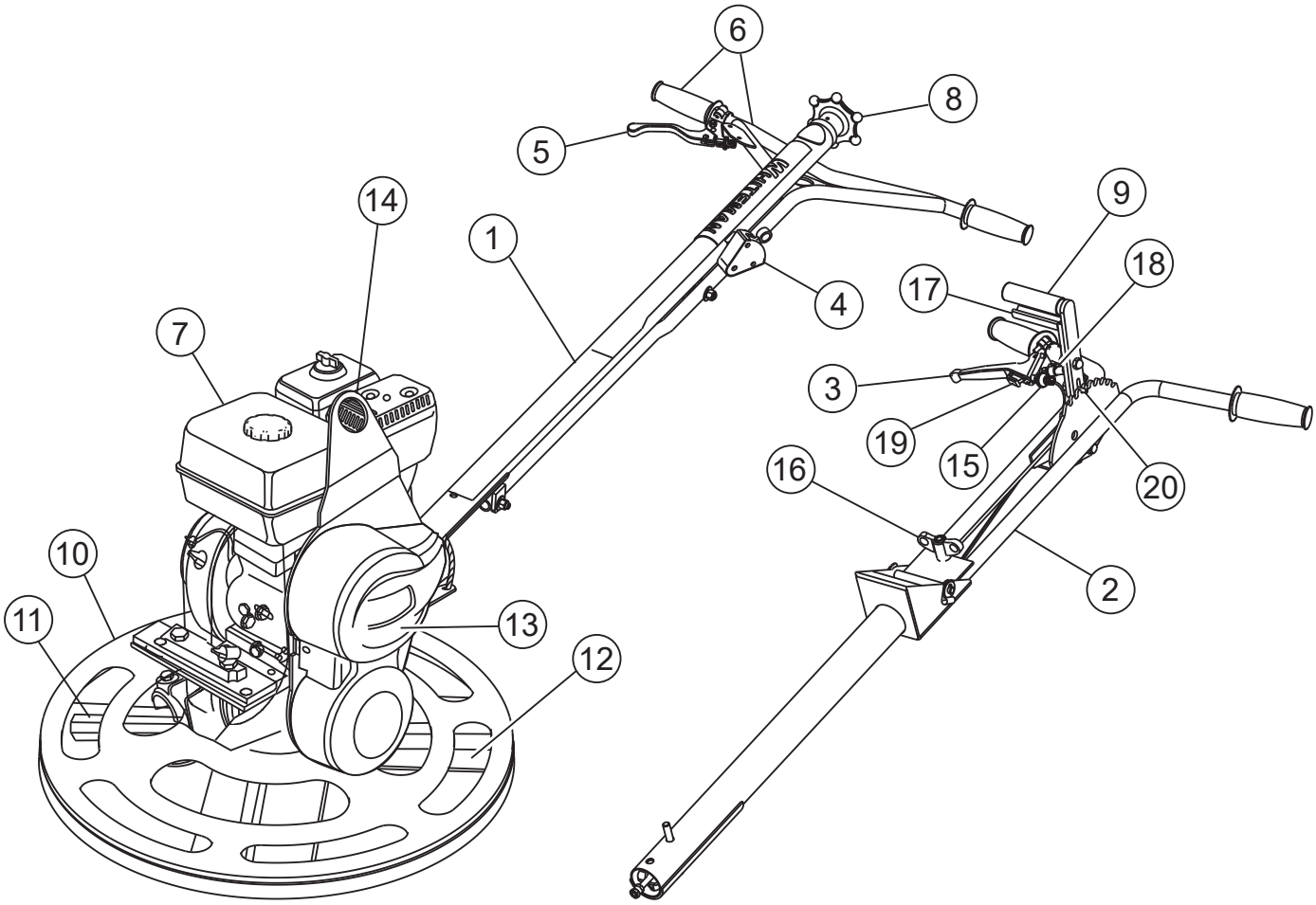

Figure 3. Trowel Components

Figure 3 shows the location of the basic trowel components. A brief description of each component is listed below.

1. **Standard Handle** — Equipped with a star wheel for manually adjusting blade pitch.
2. **Quick Pitch™ Handle (Optional)** — To adjust the pitch of the blades upward using the Quick Pitch™ handle, simply pull the T-handle backward while squeezing the trigger. Push the T-handle forward to pitch the blades flat (no pitch). Handle folds for storage. **Contact Multiquip unit sales to purchase this option.**
3. **Throttle Lever (Quick Pitch™ Handle)** — Equipped with an integrated 'kill' switch.
4. **Centrifugal Safety Stop Switch** — Will stop the engine and bring the trowel to a halt in the event of a trowel runaway condition (i.e. the operator releases the handlebar during operation).
5. **Throttle Lever (Standard Handle)** — Controls engine speed.
6. **Hand Grip/Handlebar** — Place hands on both hand grips to maneuver the trowel. Replace hand grips when they become worn or damaged.
7. **Engine** — Honda 3.5 hp (2.6 kW) or 4.8 hp (3.58 kW) gasoline engine. Refer to Table 2 for engine specifications.
8. **Pitch Control Star Wheel (Standard Handle)** — Adjusts blade pitch. Rotate the star wheel clockwise to pitch the blades upward. Rotate the star wheel counterclockwise to pitch the blades flat (no pitch).
9. **Quick Pitch™ Trigger** — Pivots back and forth to adjust blade pitch.
10. **Guard Ring** — Protects the rotating blades from damage and protects the operator from injury. **DO NOT** put hands or feet inside the guard ring while the engine is running. **NEVER** attempt to lift the trowel by the guard ring.
11. **Trowel Arms (4)** — Blades or float pans are attached to the trowel arms. **DO NOT** operate the trowel with a bent, broken, or out-of-adjustment trowel arm.
12. **Blades (4)** — This trowel is equipped with special combination blades designed specifically for edging.
13. **V-Belt Cover** — Remove this cover to gain access to the V-belt. **DO NOT** operate the trowel with this cover removed.
14. **Lifting Bail** — Attach a suitable lifting device to the lifting bail whenever lifting of the trowel is required.
15. **Thumbwheel Adjuster** — Use to adjust the throttle cable.
16. **T-Handle Knob (Quick Pitch™ Handle)** — Loosen the T-handle knob to fold the Quick Pitch™ handle.
17. **Quick Pitch™ Trigger Lock** — Use to lock blade pitch position.
18. **'Kill' Switch** — Integrated into the Quick Pitch™ handle.
19. **Throttle Lever Idle Detent** — When pressed, the detent will hold the throttle lever away from the 'kill' switch, allowing the engine to run at idle.
20. **Quick Pitch™ Latching Bolt** — Provides secure positioning of the Quick Pitch™ handle into a slotted pitch comb.

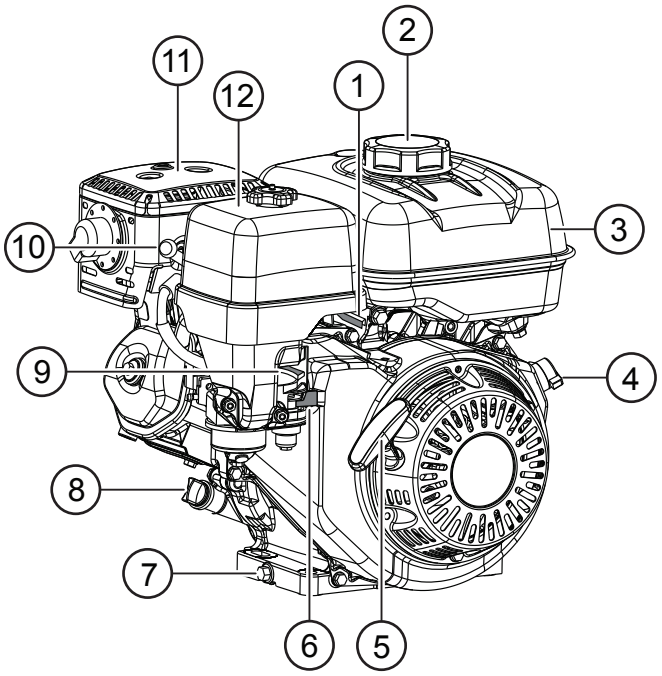

Figure 4. Basic Engine Components

INITIAL SERVICING

The engine (Figure 4) must be checked for proper lubrication and filled with fuel prior to operation. Refer to the manufacturer's engine manual for detailed operation and service instructions.

1. **Throttle Lever** — Adjusts engine speed (RPM).
2. **Fuel Filler Cap** — Remove to add unleaded gasoline to the fuel tank. Make sure the cap is tightened securely. **NEVER** overfill.

DANGER



NEVER fill the fuel tank while the engine is running or hot. In the event of a fuel spill, **DO NOT** start the engine until all fuel residue has been wiped up and the area surrounding the engine is dry. Fuel is **extremely flammable** and can ignite if it comes into contact with hot engine parts or sparks from the ignition system.

3. **Fuel Tank** — Holds up to 2.1 quarts (2.0 liters) of unleaded gasoline. Refer to the manufacturer's engine manual for additional information.
4. **Engine ON/OFF Switch** — **ON** position permits engine starting, **OFF** position stops engine operation.

CAUTION

NEVER disable or disconnect the engine **ON/OFF** switch. It is provided for operator safety. **Injury may result** if it is disabled, disconnected, or improperly maintained.

5. **Recoil Starter** — Manual starting mechanism. Pull the starter grip slowly until resistance is felt, then pull briskly and smoothly to start the engine.
6. **Fuel Valve Lever** — Open to allow the flow of fuel, and close to prevent the flow of fuel.
7. **Oil Drain Bolt** — Remove to drain oil from the engine crankcase.
8. **Dipstick/Oil Filler Cap** — Remove to determine if engine oil is low. Add oil through this port as recommended in Table 5.
9. **Choke Lever** — Aids in starting a cold engine or starting in cold weather conditions. The choke enriches the fuel mixture.
10. **Spark Plug** — Provides spark to the ignition system. Set the spark plug gap according to the engine manufacturer's instructions, and clean the spark plug once a week.
11. **Muffler** — Reduces noise and emissions. **DO NOT** touch the muffler while it is hot.

WARNING



Engine components can generate extreme heat. To prevent burns, **DO NOT** touch these areas while the engine is running or immediately after operating. **DO NOT** operate the engine with the muffler removed.

12. **Air Cleaner** — Prevents dirt and other debris from entering the fuel system. Remove the wing nut on top of the air cleaner to gain access to the filter elements.

NOTICE

Operating the engine without an air filter, or with a damaged or worn air filter in need of replacement, will allow dirt to enter the engine, causing rapid engine wear.

ASSEMBLY AND INSTALLATION

Some components must be installed before the trowel can be operated. This section provides general instructions on how to install these components. **For detailed handle assembly intructions, contact Multiquip and request Instruction Sheet P/N 21766 (standard handle) or P/N 21849 (Quick Pitch™ handle).**

Handle Tube Installation

Attach the main handle (tube) to the gearbox using the supplied hardware as shown in Figure 5.

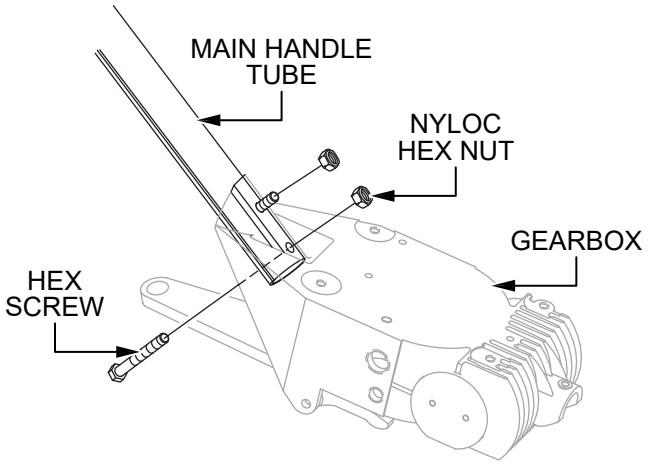

Figure 5. Handle Tube Installation

Quick Pitch™ Handle Assembly

If your trowel is equipped with a folding Quick Pitch™ handle, you will need to unfold and adjust the handle to the upright position prior to operation. It was assembled at the factory and shipped in its folded or stowed position.

⚠ CAUTION

The Quick Pitch™ handle is spring-loaded. Personal injury or damage can result from improper handling, installation, or adjustment. **Use extreme caution** when handling this component.

1. Make sure that the Quick Pitch™ trigger (Figure 6) has been attached to the upper handlebar and the pitch control cable has slack.

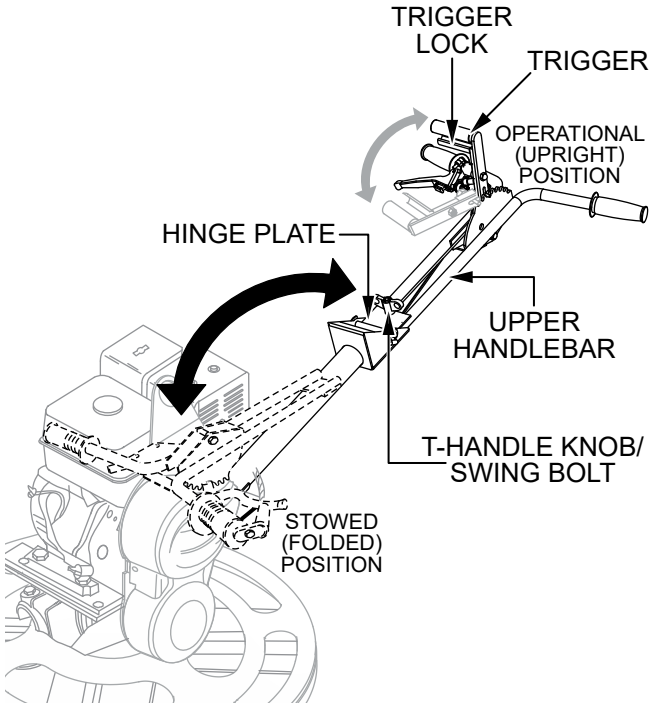

Figure 6. Quick Pitch™ Handle Assembly

2. Rotate the T-handle knob (Figure 6) on the top side of the upper handlebar counterclockwise to remove the knob from the swing bolt.
3. Move the Quick Pitch™ handle toward the operator's position and unfold the upper handlebar away from the engine into the upright position (Figure 6).
4. Reinsert the swing bolt through the slot in the hinge plate (Figure 6). Turn the T-handle knob clockwise to secure the upper handlebar in place.

NOTICE

When folding the Quick Pitch™ handle assembly, remember to first move the Quick Pitch™ trigger forward to avoid stretching the throttle cable.

Throttle Cable Installation

NOTICE

The throttle cable length is preset and installed in the throttle lever at the factory.

1. Set the throttle lever to the idle position (lever away from the operator). See Figure 7.

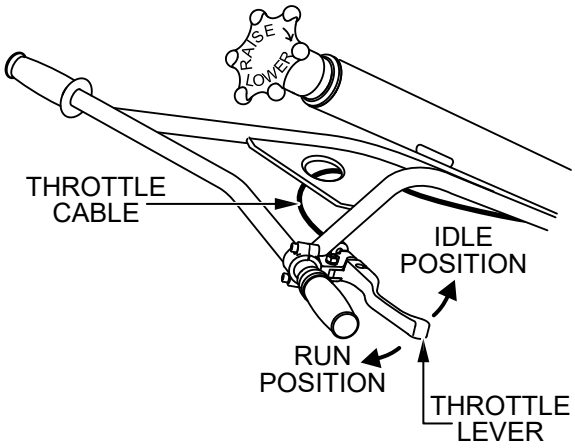

Figure 7. Throttle Lever (Standard Handle)

2. Uncoil the throttle cable and housing.
3. Make sure the throttle cable is fed through the tube on the underside of the handle and secured to the upper handle and main tube with zip ties.
4. Loosen the cable housing clamp screw and the swivel stop screw (Figure 8).

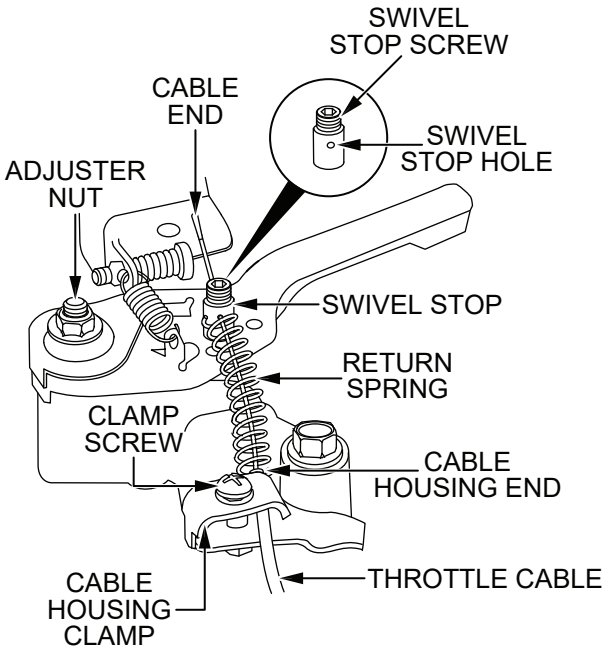

Figure 8. Throttle Cable Installation

5. Place the primary throttle return spring between the cable housing clamp and the swivel stop screw (Figure 8).
6. Feed the cable assembly through the cable housing clamp, return spring, and swivel stop hole, until the cable housing extends under the housing clamp to its far edge (Figure 8).
7. Adjust the throttle cable at the throttle lever on the handlebar (Figure 9).

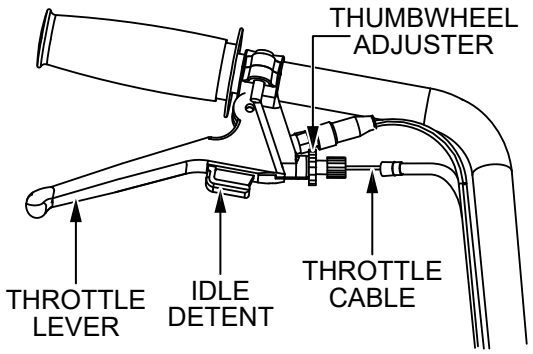

Figure 9. Throttle Cable Adjustment

Blade Pitch Cable Installation

1. For trowels equipped with a **standard** handle, turn the star wheel counterclockwise to release tension on the blade pitch cable. See Figure 10.

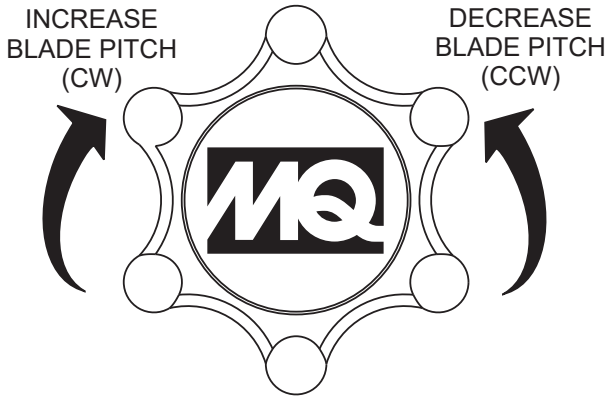

Figure 10. Blade Pitch Cable Adjustment (Standard Handle)

2. For trowels equipped with a **Quick Pitch™** handle, squeeze the trigger lock and push the trigger towards the engine to release tension on the blade pitch cable. See Figure 11.

⚠ CAUTION

The Quick Pitch™ trigger is under spring tension and can snap in the direction of force (toward the user) if not firmly grasped, which may cause bodily injury.

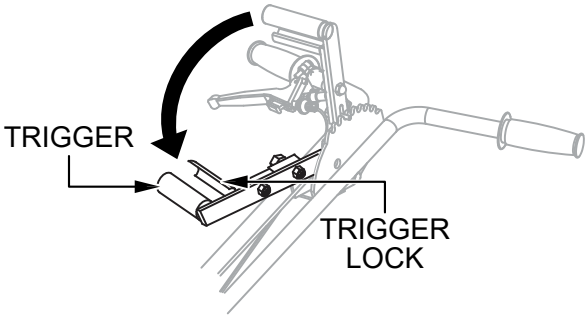

Figure 11. Blade Pitch Cable Adjustment (Quick Pitch™ Handle)

3. Remove any nuts from the pitch cable end. Insert the cable through the yoke eyelet (Figure 12).

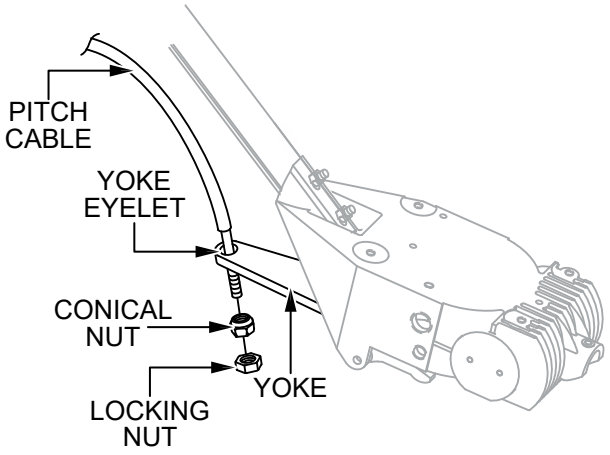

Figure 12. Cable to Yoke Attachment

4. Thread the conical nut (Figure 12) up to the eyelet. Tighten the conical nut by hand to remove all of the slack from the cable.
5. Thread the locking nut (Figure 12) up to the conical nut. Use a wrench to tighten the conical nut against the yoke boss. This will lock the cable in place.
6. Use a wrench to tighten the locking nut (Figure 12) against the yoke boss.

Float Pan Installation (Optional)

Float pans attach to the trowel blades and allow the trowel to 'float' on wet concrete. The disc design allows early floating and easy movement from wet to dry areas. Float pans are also very effective at embedding large aggregates and surface hardeners.

1. Lift the trowel just enough to slide a float pan under the blades. Lower the trowel onto the pan with the blades adjacent to the Z-clips.

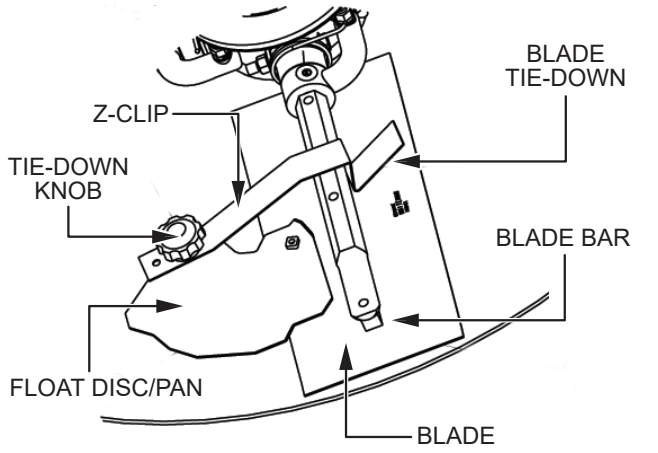

Figure 13. Float Pan Installation

2. Rotate the blades into position under the Z-clips. Be sure to rotate the blades in the operational direction of travel, or use the engine to rotate the blades into position.
3. Secure the blade tie-downs to the far side of the Z-clip brackets with the tie-down knobs.
4. Make sure the blade edges are secured under the Z-clips and the tie-downs are secured completely over the edges of the blade bar.

WARNING



Lifting/crush hazard. **DO NOT** lift the trowel with a float pan attached.

BEFORE STARTING

1. Clean the trowel, particularly the engine cooling air inlet. Remove all dirt and dust.
2. Inspect the engine air cleaner for dirt and dust. Replace the air cleaner if it is dirty.
3. Inspect the carburetor for external dirt and dust. Clean with dry compressed air as needed.
4. Inspect all fastening nuts and bolts for tightness.

ENGINE OIL

1. Place the trowel on secure, level ground with the engine **OFF**.
2. Remove the dipstick (Figure 14) from the engine oil filler hole and wipe it clean.

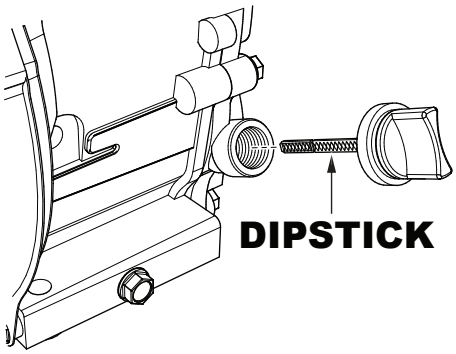

Figure 14. Engine Oil Dipstick

3. Reinsert the dipstick, then remove it again without screwing it into the filler neck. Check the oil level shown on the dipstick.
4. If the oil level is low (Figure 15), fill to the edge of the oil filler hole with the recommended oil type listed in Table 5. Refer to Table 2 for maximum engine oil capacity.

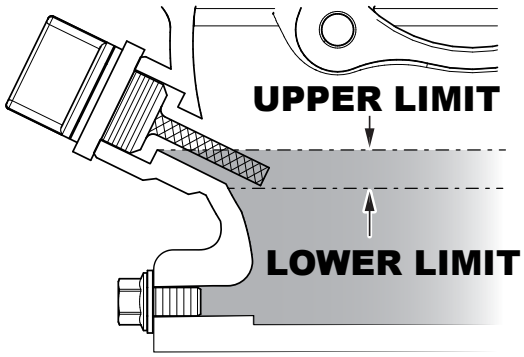

Figure 15. Engine Oil Level

Table 5. Engine Oil Type		
Season	**Temperature**	**Oil Type**
Summer	25°C or Higher	SAE 10W-30
Spring/Fall	25°C–10°C	SAE 10W-30/20
Winter	0°C or Lower	SAE 10W-10

FUEL

Remove the fuel filler cap and inspect the fuel level in the tank. If fuel is low, replenish with 86 octane or higher unleaded gasoline.

DANGER



Motor fuels are **highly flammable** and can be dangerous if mishandled. **DO NOT** smoke while refueling. **DO NOT** attempt to refuel while the engine is **running** or **hot**!

WARNING

ALWAYS use a strainer for filtration while refueling. **NEVER** top off fuel. **ALWAYS** wipe up any spilled fuel immediately.

GEARBOX OIL

1. Look at the sight glass on the side of the gearbox (Figure 16) to determine if gearbox oil is low. The correct oil level is to the halfway point on the sight glass.

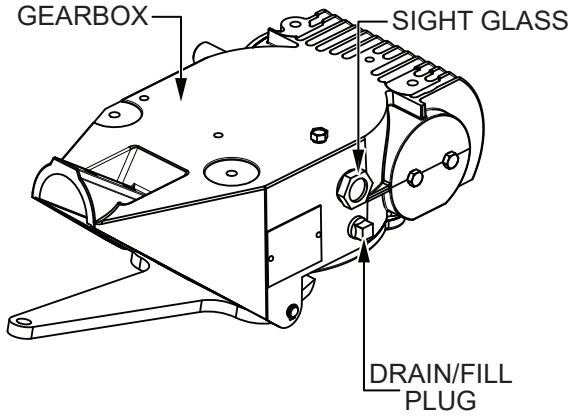

Figure 16. Gearbox Oil

2. If gearbox oil is low, remove the drain/fill plug (Figure 16) and fill with Chevron Cetus HiPerSYN 460 synthetic gear oil until the correct oil level is reached. Replace the drain/fill plug when finished.
3. If there is too much oil in the gearbox, remove the drain/fill plug and allow the oil to seep out. Replace the plug once the correct oil level is reached.

V-BELT

1. Inspect the V-belt (Figure 17) to determine if it is frayed, peeling, full of tiny cracks, has pieces of rubber missing, or is otherwise damaged.

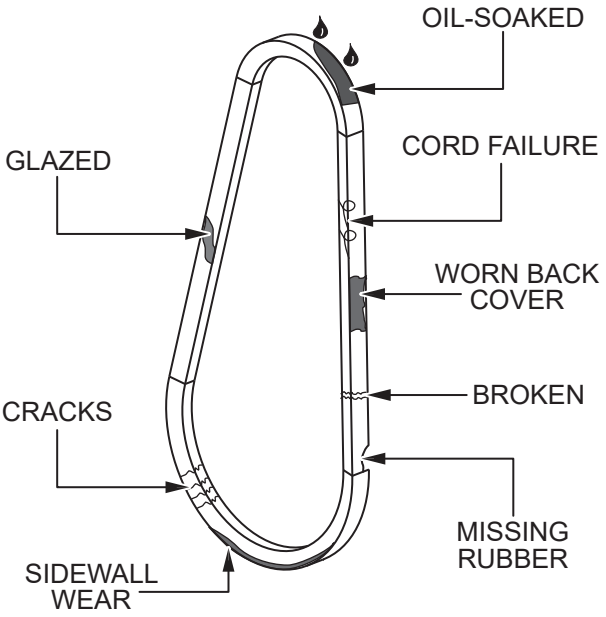

Figure 17. V-Belt Inspection

2. Inspect the V-belt (Figure 17) to determine if it is oil soaked or *glazed* (a hard, shiny appearance on the sides of the belt). Either of these conditions can cause overheating of the belt, which may weaken the belt and increase the possibility of it breaking.
3. Replace the V-belt immediately if any of the aforementioned wear conditions are observed.

BELT GUARD

Inspect the belt guard (Figure 18) for damage and loose or missing hardware.

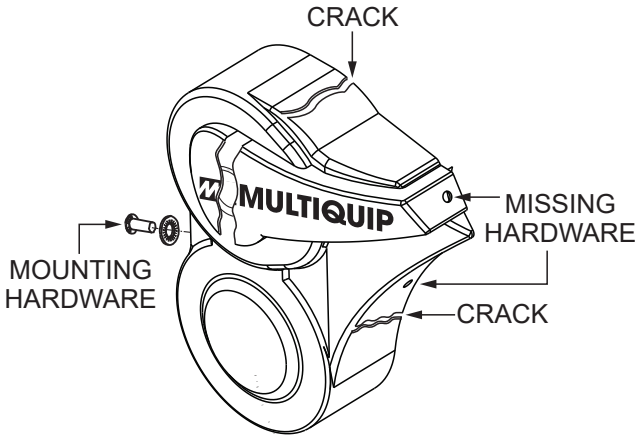

Figure 18. Belt Guard Inspection

BLADES

Inspect the trowel blades for wear or damage (Figure 19). If one blade is worn out while the others look new, there could be a blade pitch problem. Refer to the ***Maintenance*** section of this manual for the blade pitch adjustment procedure. Replace any worn or damaged blades immediately.

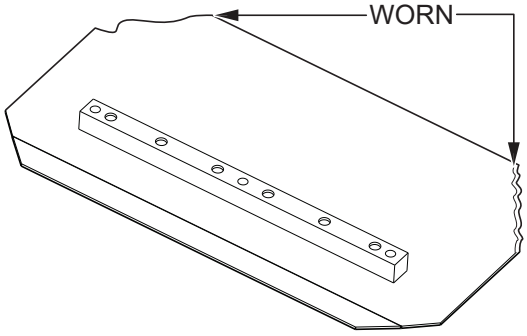

Figure 19. Blade Inspection

This section is intended to assist the operator with the initial startup of the walk-behind trowel. It is extremely important that this section be read carefully before attempting to use the trowel in the field. **DO NOT** use your trowel until this section is thoroughly understood.

NOTICE

DO NOT attempt to operate the trowel until the ***Safety***, ***Inspection***, and ***Operation*** sections of this manual have been read and thoroughly understood.

STARTING THE ENGINE

1. Place the engine fuel valve lever in the **OPEN** position (Figure 20).

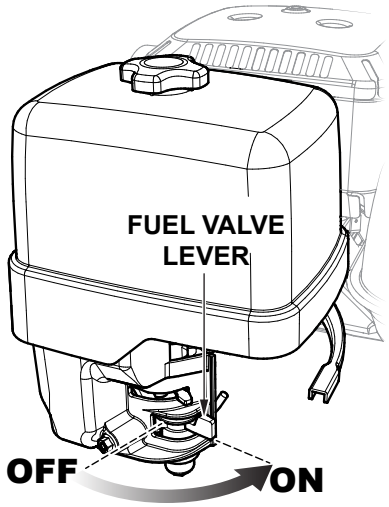

Figure 20. Engine Fuel Valve Lever (Open)

2. Place the throttle lever in the **IDLE** position (Figure 21).

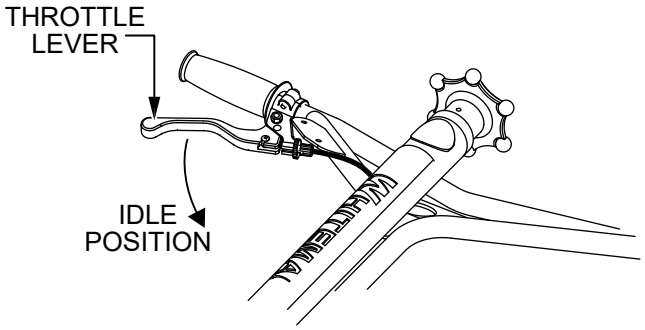

Figure 21. Throttle Lever (Idle)

3. If starting a cold engine, place the choke lever in the **CLOSED** position (Figure 22).

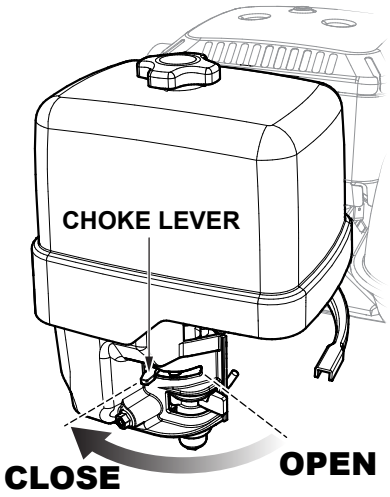

Figure 22. Choke Lever (Closed)

4. If starting a warm engine, place the choke lever in the **OPEN** position (Figure 23).

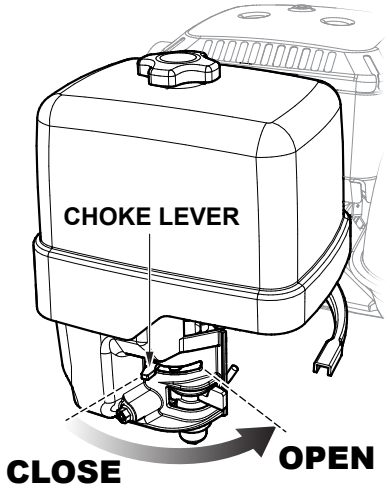

Figure 23. Choke Lever (Open)

5. Place the engine ON/OFF switch in the **ON** position (Figure 24).

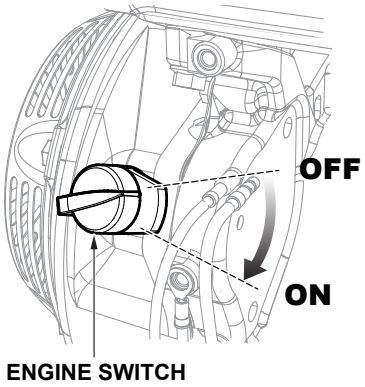

Figure 24. Engine ON/OFF Switch (ON)

6. Slowly pull the starter grip (Figure 25) until resistance is felt, then pull briskly and smoothly to start the engine. Gently return the starter grip to its original position.

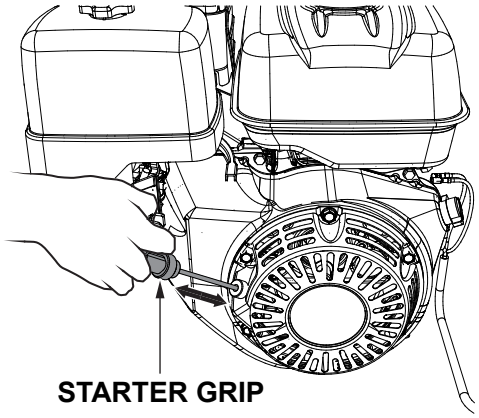

Figure 25. Starter Grip

7. If the engine has started, slowly return the choke lever to the **CLOSED** position (Figure 22). If the engine has not started, repeat steps 1–6.

8. Before operating the trowel, run the engine for several minutes and check for fuel leaks and loose components.

TO BEGIN TROWELING

Place the throttle lever (Figure 26) in the **RUN** position.

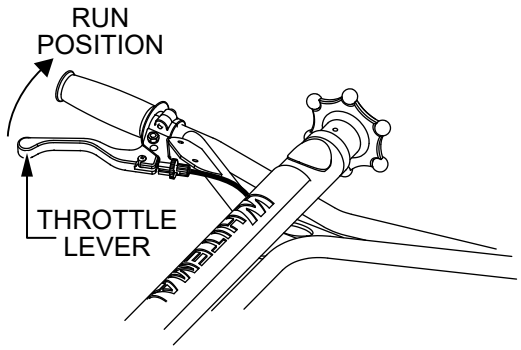

Figure 26. Throttle Lever (Run)

PITCHING THE BLADES

Standard Handle

To pitch the blades upward with the standard handle (Figure 27), turn the star wheel clockwise. Turn the star wheel counterclockwise to pitch the blades flat (no pitch).

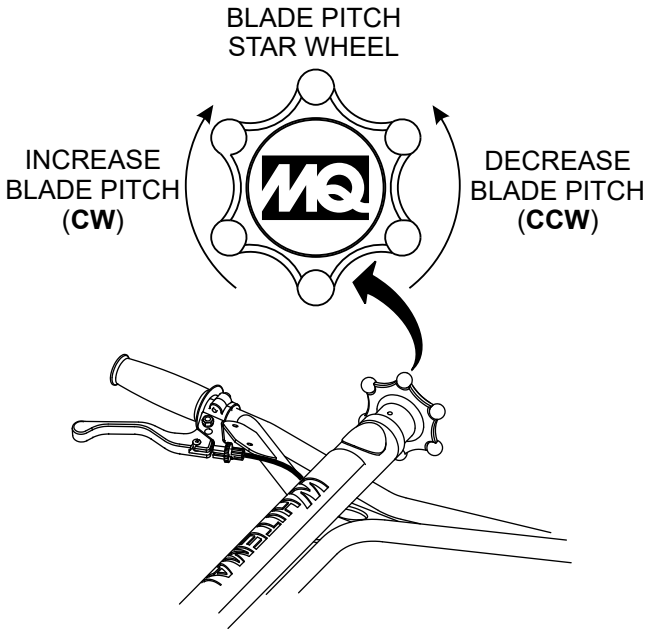

Figure 27. Pitching the Blades (Standard Handle)

Quick Pitch™ Handle

To pitch the blades upward with the Quick Pitch™ handle (Figure 28), pull the trigger backward while squeezing the trigger lock. Push the trigger forward to pitch the blades flat (no pitch).

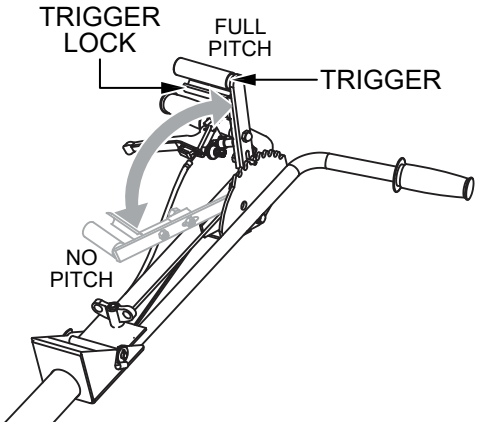

Figure 28. Pitching the Blades (Quick Pitch™ Handle)

STOPPING THE TROWEL

1. Return the throttle lever to the **IDLE** position (Figure 29) and let the engine run for three minutes at low speed.

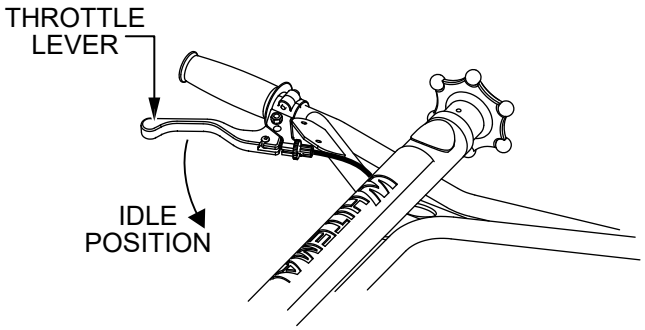

Figure 29. Throttle Lever (Idle)

2. After the engine has cooled, place the engine ON/OFF switch in the **OFF** position (Figure 30).

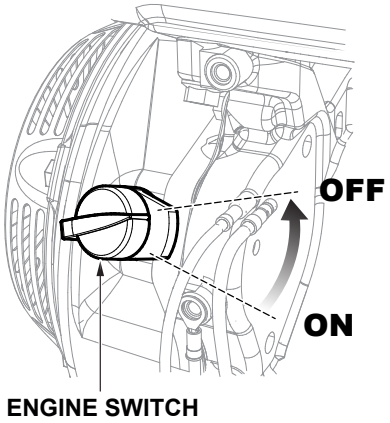

Figure 30. Engine ON/OFF Switch (OFF)

3. Place the fuel valve lever in the **CLOSED** position (Figure 31).

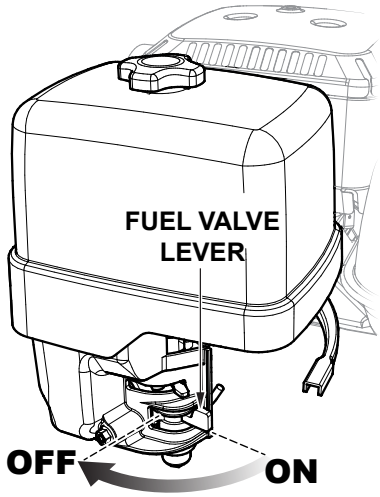

Figure 31. Fuel Valve Lever (Closed)

CONCRETE FINISHING TECHNIQUES

The instructions in this manual are provided as a basic guide to trowel operation, **not** a complete guide to concrete finishing. We suggest that all operators (experienced and novice) read *Slabs on Ground* published by the American Concrete Institute.

MANEUVERING THE TROWEL

1. Stand in the operator's position behind the handle. With secure footing and a firm grasp on the handle, slowly increase the engine speed until the desired blade speed is obtained.
2. Figure 32 illustrates a typical walk-behind trowel application. Practice maneuvering the trowel. The trick is to let the trowel do the work.
3. Continue to practice maneuvering the trowel as if finishing a slab of concrete. Practice edging and covering a large area.
4. An effective finishing technique is to work **backward**. **Be careful when moving backward** so that hazards can be avoided. The best way to get accustomed to the trowel is repeated use.

To move the trowel to the operator's **left**, **lift up** on the handle. To move the trowel to the **right**, **push down** on the handle.

REMEMBER! If you let go of the trowel, simply **step away** and let the trowel come to a complete **STOP** before trying to recover it.

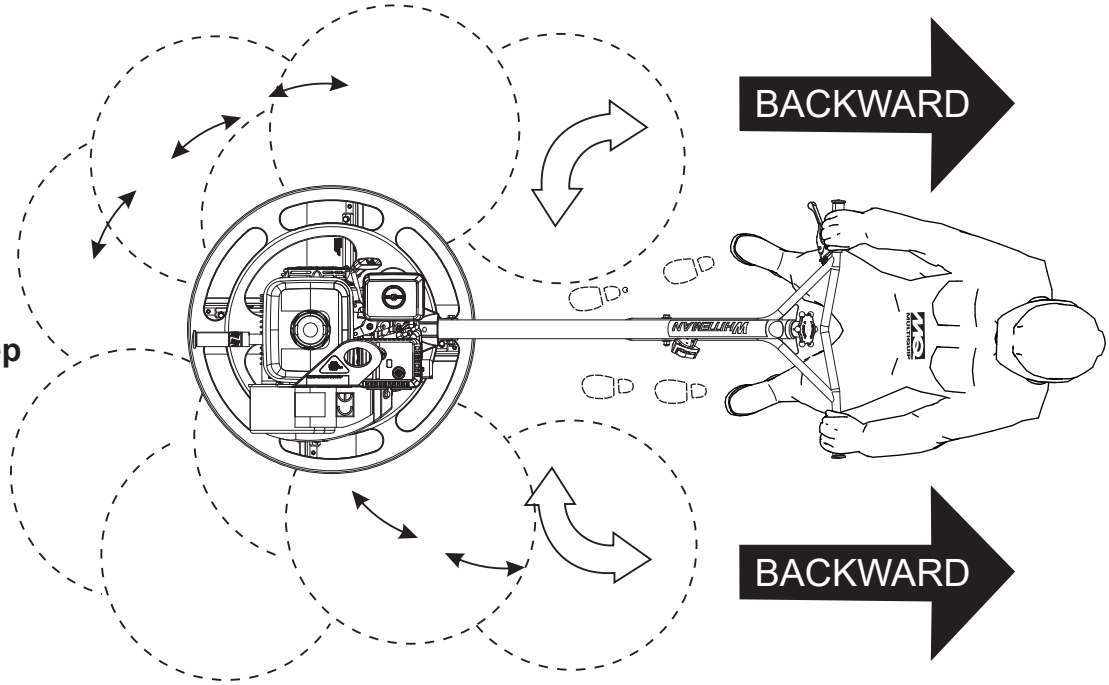

The best method for finishing concrete is to slowly walk **backward** with the trowel, guiding it from side to side. This will cover any footprints in the wet concrete.

Figure 32. Maneuvering the Trowel

⚠ CAUTION

NEVER place your **hands** or **feet** inside the guard rings while starting or operating this equipment.

⚠ CAUTION

ALWAYS stay clear of **rotating** or **moving** parts while operating this equipment.

HANDLES

Standard Handle

The standard handle (Figure 33) is equipped with a star wheel for blade pitch adjustment. Refer to the ***Operation*** section of this manual for more information.

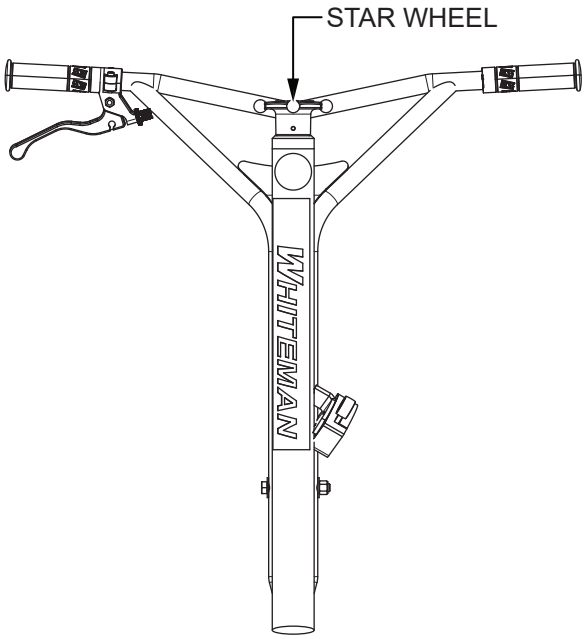

Figure 33. Standard Handle

Quick Pitch™ Handle (Optional)

The optional Quick Pitch™ handle (Figure 34) allows the operator to quickly and easily adjust blade pitch using a spring-loaded trigger handle. Refer to the ***Operation*** section of this manual for more information. Please contact Multiquip unit sales to order this option.

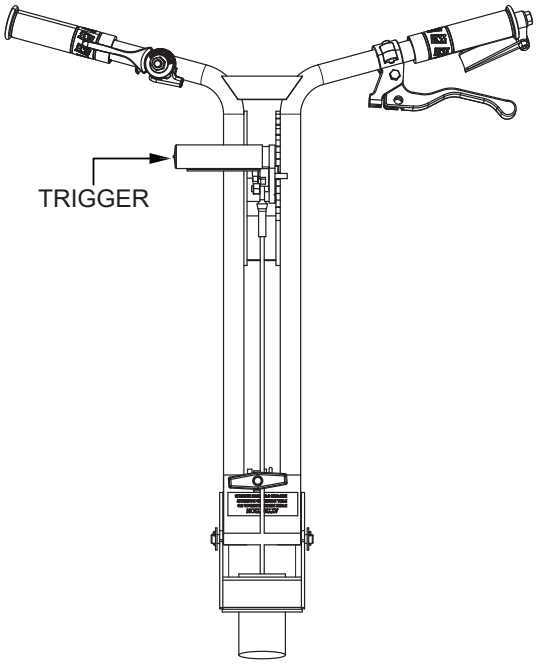

Figure 34. Quick Pitch™ Handle

BLADES AND PANS

Trowel blades are essential for finishing concrete. The blades of this trowel were built to stringent quality standards from the finest steel. Trowel blades should be replaced when they fail to finish concrete in a satisfactory manner.

If replacement blades are needed, refer to the parts manual provided with your trowel for part numbers, and order from your Multiquip parts dealer or importer.

Combination Blades (Standard)

This trowel is equipped with combination blades (Figure 35) which provide optimal performance for both floating and finishing operations. These blades are versatile and should satisfy most troweling needs.

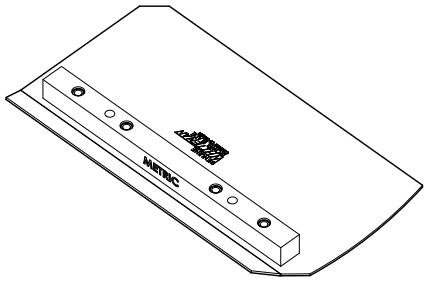

Figure 35. Combination Blade

Float Pans (Optional)

Float pans (Figure 36) attach to the spider assembly and allow the trowel to 'float' on wet concrete. The disc design allows early floating and easy movement from wet to dry areas. Float discs are also very effective at embedding large aggregates and surface hardeners.

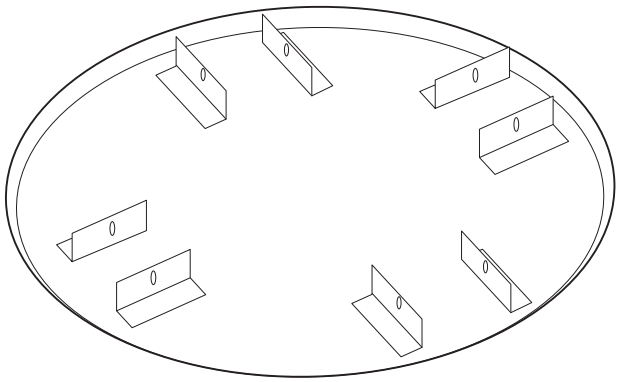

Figure 36. Float Pan

Table 6. Engine Maintenance Schedule							
Description[3]	**Operation**	**Before Each Use**	**First Month or 10 Hrs.**	**Every 3 Months or 25 Hrs.**	**Every 6 Months or 50 Hrs.**	**Every Year or 100 Hrs.**	**Every 2 Years or 200 Hrs.**
Engine Oil	Check	X					
	Change		X				
Air Cleaner	Check	X					
	Change			X[1]			
All Nuts and Bolts	Re-tighten If Necessary	X					
Spark Plug	Check/Clean				X		
	Replace						X
Cooling Fins	Check				X		
Spark Arrester	Clean					X	
Fuel Tank	Clean					X	
Fuel Filter	Check					X	
Idle Speed	Check/Adjust					X[2]	
Valve Clearance	Check/Adjust						X[2]
Fuel Lines	Check	Every 2 years (replace if necessary)[2]					

* Replace the paper filter element only.

(1) Service more frequently when used in **dusty** areas.

(2) These components should be serviced by your service dealer unless you have the proper tools and are mechanically proficient. Refer to your engine shop manual for service procedures.

(3) For commercial use, log hours of operation to determine proper maintenance intervals.

Table 7. Trowel Maintenance Schedule					
Item	**Operation**	**Periodic Maintenance Interval**			
		Daily	**Every 50–60 Hrs.**	**Every 200–300 Hrs.**	**Every 2000–2500 Hrs.**
V-Belt	Check/Replace	X			
Trowel Arms	Grease	X			
	Remove/Clean			X	
	Adjust			X	
Blades	Check/Replace		X		
Thrust Collar/Bushing	Remove/Clean			X	
	Check/Replace				X
Arm Bushing	Check/Replace				X
Shaft Seals	Check/Replace				X
Pitch Control Cable	Check				X

General maintenance practices are crucial to the performance and longevity of your trowel. This equipment requires routine cleaning, lubrication, and inspection of components for wear or damage.

Refer to Table 6 and Table 7 to schedule engine and trowel maintenance. The following maintenance procedures can prevent serious trowel malfunction or damage.

DANGER



DO NOT use gasoline or low flash point solvents to clean the engine or any of its components. The possibility exists of **fire** or **explosion** which can damage the equipment and cause **severe bodily harm** or even **DEATH**.

WARNING



Some maintenance operations may require a running engine. **ALWAYS** make sure the maintenance area is well ventilated. Gasoline engine exhaust contains **poisonous carbon monoxide gas** that can result in **unconsciousness** and/or **DEATH** when inhaled.

CAUTION



ALWAYS allow the engine to cool before servicing. **NEVER** attempt to service a hot engine.

CAUTION

ALWAYS disconnect the spark plug wire from the spark plug and secure it **away** from the engine before performing trowel maintenance or adjustments.

ENGINE MAINTENANCE

Inspect the engine daily for cleanliness, oil or fuel leakage, and loose fasteners.

Air Cleaner

CAUTION



ALWAYS wear personal protective equipment such as approved safety glasses, face shields, dust masks, or respirators when cleaning air filters with compressed air.

The engine air cleaner is equipped with a replaceable, high-density, paper element. Refer to Figure 37 for air cleaner maintenance.

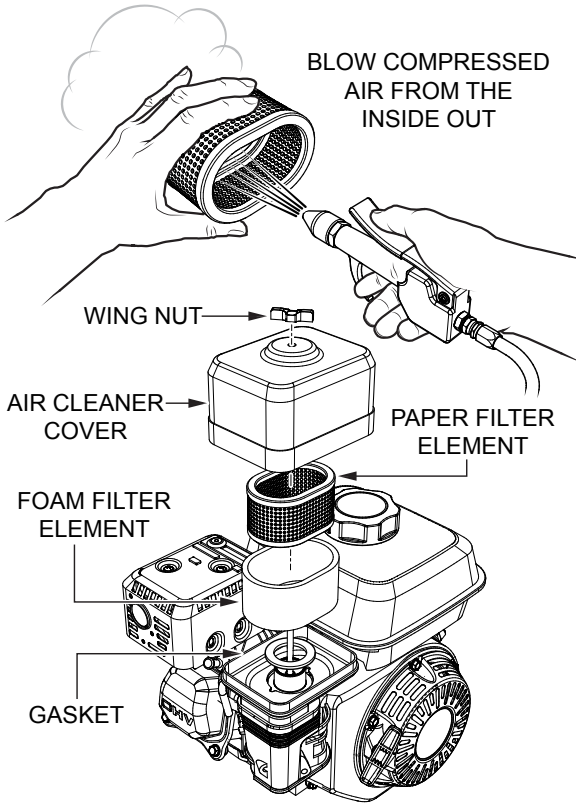

Figure 37. Air Cleaner Maintenance

1. Remove the air cleaner cover and foam filter element.
2. To remove dirt, tap the paper filter element several times on a hard surface or blow compressed air, not exceeding 30 psi (207 kPa or 2.1 kgf/cm²), through the filter element from the inside out. **DO NOT** brush off dirt. Brushing will force dirt into the fibers. Replace the paper filter element if it is excessively dirty.

3. Clean the foam element in warm, soapy water or a **nonflammable** solvent. Rinse and dry thoroughly. Dip the element in clean engine oil and completely squeeze out the excess oil from the element before reinstalling.

NOTICE

Operating the engine with loose or damaged air cleaner components can allow unfiltered air into the engine, causing premature wear and failure.

Engine Oil

NOTICE

ALWAYS drain the engine oil while the oil is **warm**.

1. Remove the drain bolt and sealing washer, and allow the oil to drain into a suitable container (Figure 38).

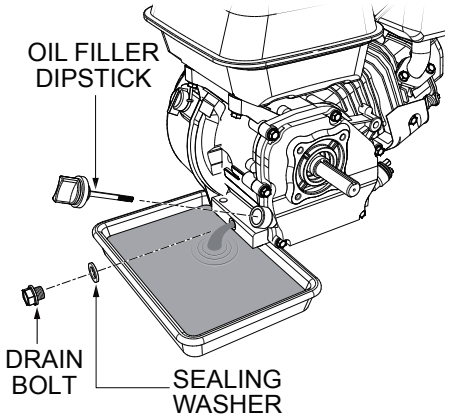

Figure 38. Draining Engine Oil

2. Replace the engine oil with the recommended oil type listed in Table 5. For engine oil capacity, see Table 2. **DO NOT** overfill.
3. Reinstall the drain bolt with sealing washer and tighten securely.

Spark Plug

1. Remove the spark plug (Figure 39) and clean it with a wire brush if it is to be reused. Replace the spark plug if the insulator is cracked or chipped.

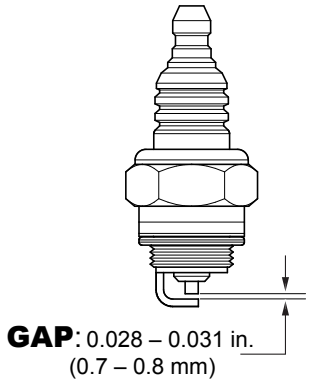

Figure 39. Spark Plug

2. Using a feeler gauge, adjust the spark plug gap (Figure 39). The gap should measure 0.028–0.031 inch (0.7–0.8 mm).
3. To prevent cross-threading, thread the spark plug into the cylinder hole by hand, then tighten securely.

V-Belt

1. Inspect the V-belt (Figure 40) to determine if it is frayed, peeling, full of tiny cracks, has pieces of rubber missing, or is otherwise damaged.

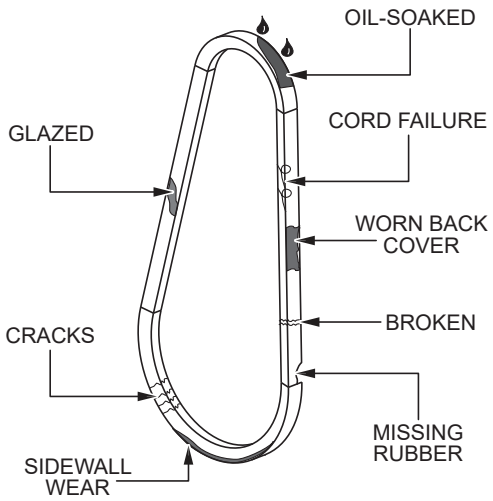

Figure 40. V-Belt Inspection

2. Inspect the V-belt (Figure 40) to determine if it is oil-soaked or *glazed* (a hard, shiny appearance on the sides of the belt). Either of these conditions can cause overheating of the belt, which can weaken the belt and increase the possibility of it breaking.
3. Replace the V-belt immediately if any of the above wear conditions are observed.

Spark Arrester

1. Remove and retain the four 5 mm screws securing the muffler protector to the muffler (Figure 41). Remove the muffler protector and set it aside.

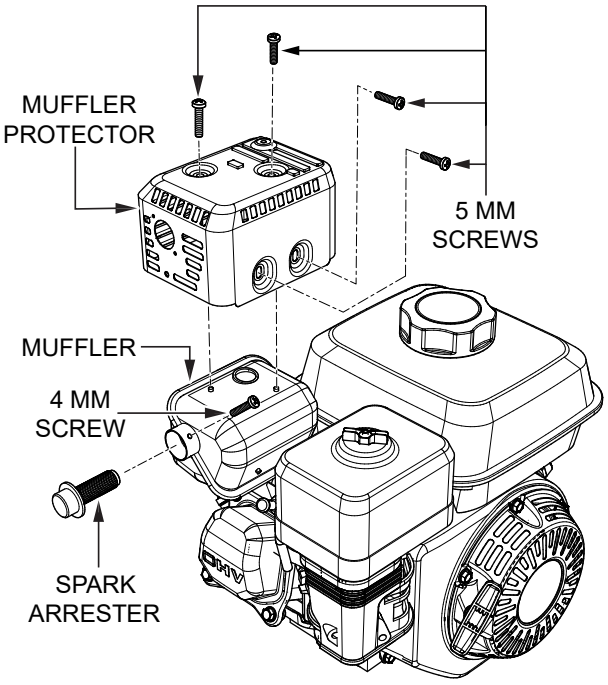

Figure 41. Spark Arrester Removal

2. Remove and retain the 4 mm screw securing the spark arrester to the muffler, and remove the spark arrester (Figure 41).
3. Carefully remove carbon deposits from the spark arrester screen (Figure 42) with a wire brush.

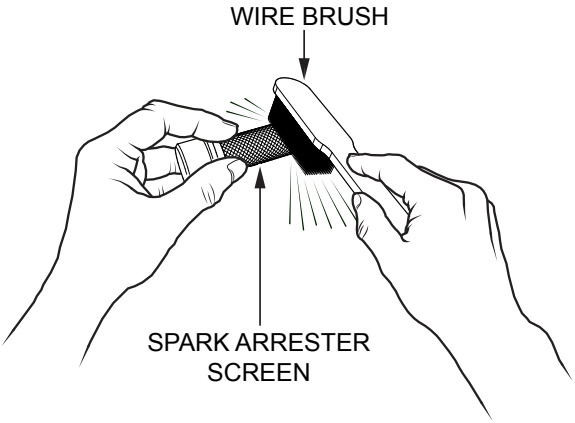

Figure 42. Cleaning the Spark Arrester

4. Replace the spark arrester if it is damaged (has breaks or holes).
5. Reinstall the spark arrester, muffler protector, and exhaust deflector in reverse order of disassembly.

> ***NOTICE***
>
> Refer to the manufacturer's engine manual supplied with your trowel for more detailed information about engine maintenance and troubleshooting.

TROWEL MAINTENANCE

Clean the trowel daily. Remove all dust and slurry buildup. Make sure lubrication is performed after any steam cleaning.

Trowel Lubrication (Every 8 Hours)

Regular lubrication is required to maintain your trowel in optimal working condition. Perform the following lubrication procedure after **every 8 hours of use**.

1. Locate one of the Zerk grease fittings on the spider assembly (Figure 43). Remove the Zerk fitting cap and set it aside.

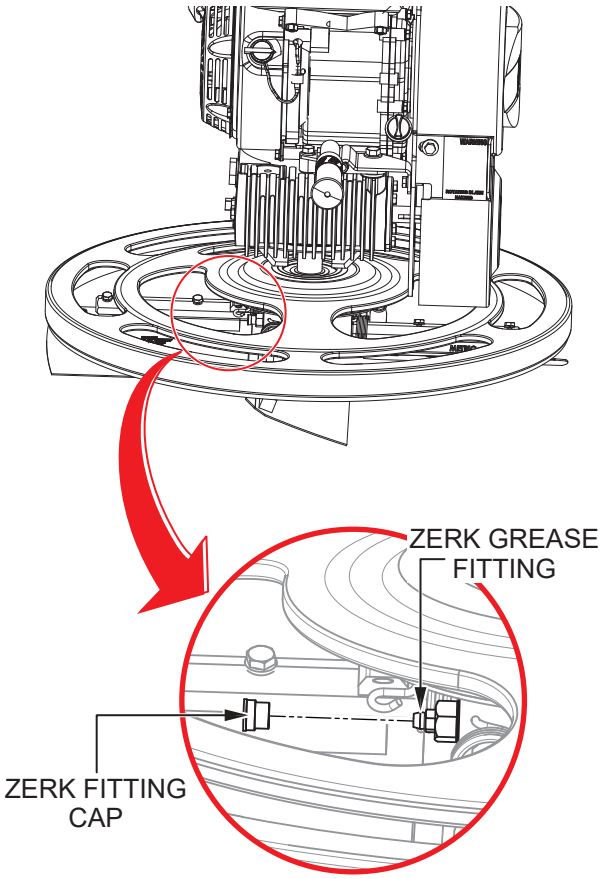

Figure 43. Spider Lubrication

2. Wipe the Zerk grease fitting clean to prevent abrasive material from entering the fitting during lubrication.
3. Lubricate the Zerk grease fitting with 1 to 1½ shots of multipurpose grade grease. **DO NOT** overgrease. Replace the Zerk fitting cap when finished.
4. Repeat steps 1–3 for the remaining grease fittings on the spider assembly.

Blade Pitch Adjustment

Perform maintenance adjustment of blade pitch using a bolt on the trowel arm lever (Figure 44). This bolt is the contact point of the trowel arm with the lower wear plate on the thrust collar. The goal of adjustment is consistent blade pitch and finishing quality.

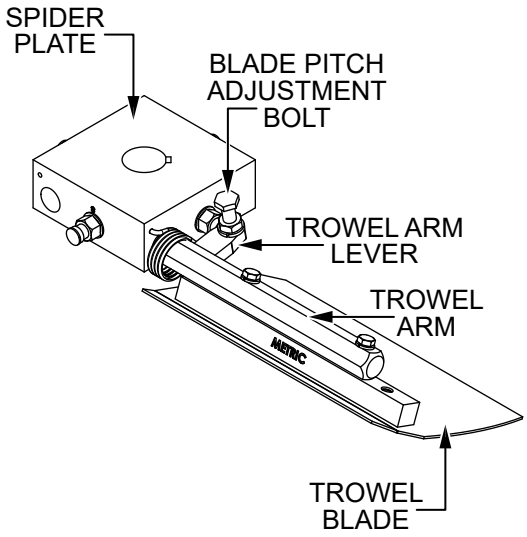

Figure 44. Blade Pitch Adjustment Bolt

Look for the following indications when determining if blade pitch adjustment is necessary:

- Are the blades wearing out unevenly (e.g. one blade is completely worn out while the others look new)?
- Does the machine have a perceptible rolling or bouncing motion while in use?
- Does the guard ring rock up and down while the machine is in use?

Once it has been determined that blade pitch adjustment is required, do the following:

1. Place the trowel on a flat, level surface, with blocks under the main guard ring for support. Any uneven spots in the floor or debris under the trowel blades will cause an incorrect perception of adjustment. Ideally, a 5 ft. × 5 ft. (1.5 m × 1.5 m), 3/4-inch thick, **flat** steel plate should be used.
2. Pitch the blades as flat as possible (Figure 45). The pitch adjustment bolts should barely contact (0.10 inch maximum clearance) the lower wear plate. All adjustment bolts should be spaced the same distance from the lower wear plate. If any one of the bolts does not make contact, adjustment is necessary.

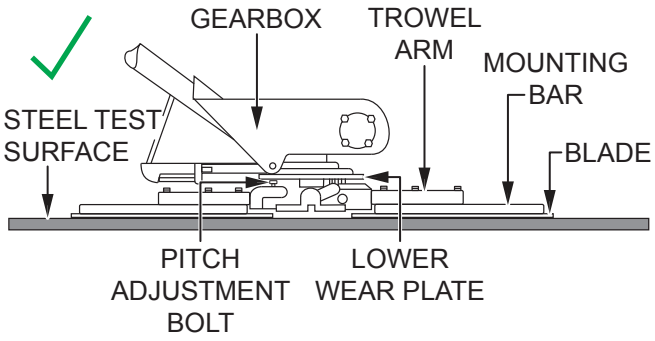

Figure 45. Blades Pitched Flat (Correct)

3. Adjust the 'high' bolts down to the level of the bolt that is not touching, or adjust the 'low' bolt up to the level of the higher ones. Whenever possible, adjust the 'low' bolt up to the level of the rest of the bolts. This is the fastest method, but it may not always work. After adjustment, verify that the blades pitch correctly.

NOTICE

Incorrectly adjusted blades will often be unable to pitch flat. This can occur if the adjustment bolts are raised too high. Conversely, adjustment bolts that are too low will prevent the blades from being pitched high enough for finishing operations.

If the trowel still finishes poorly after blade pitch adjustment, the blades, trowel arms, and trowel arm bushings should be inspected for improper adjustment, wear, or damage.

Figure 46 illustrates incorrect spider plate alignment due to improper adjustment, worn spider bushings, or bent trowel arms.

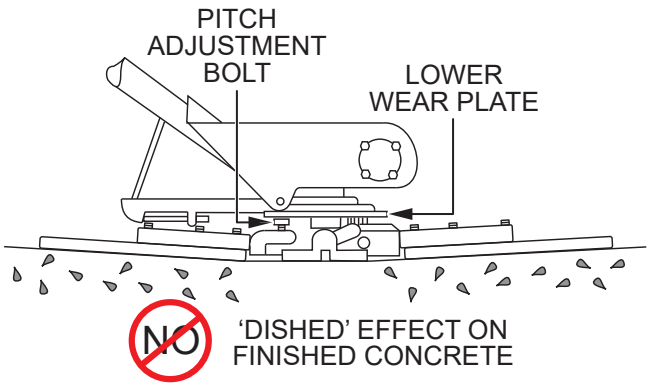

Figure 46. Blades Pitched Flat (Incorrect)

Spider Removal

1. Locate and remove the Zerk grease fitting and Allen head screw designated by the letter '**S**' (Figure 47).

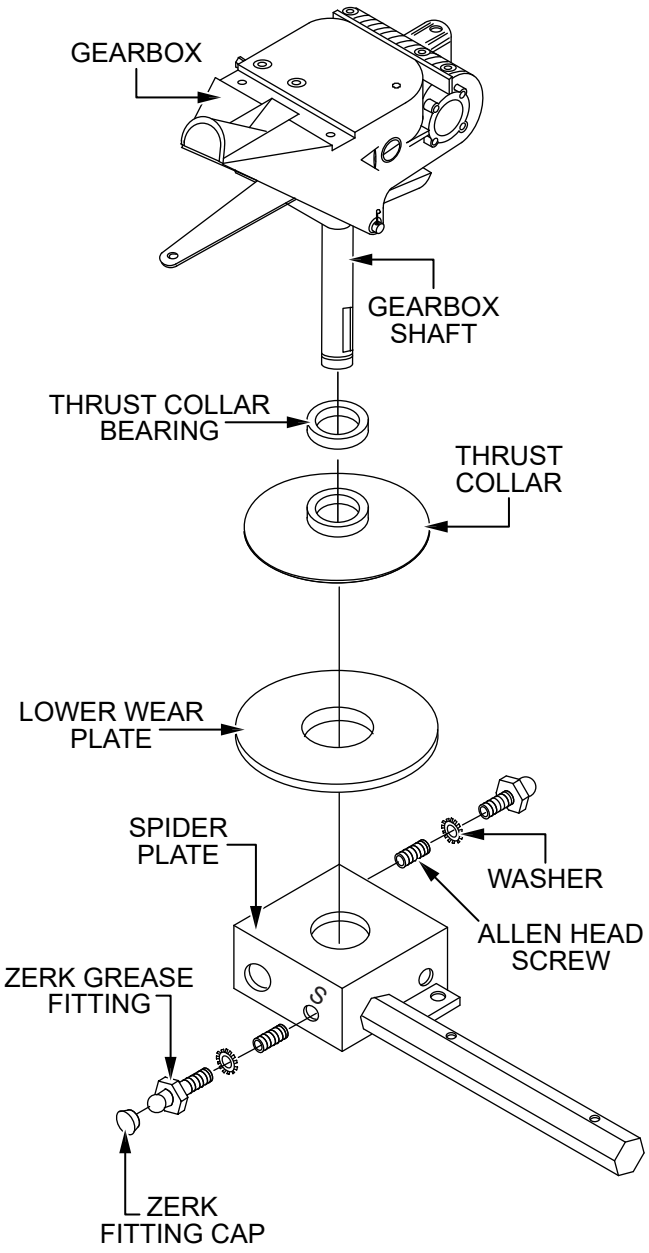

Figure 47. Spider Removal

2. Remove the Zerk grease fitting and Allen head screw located on the opposite side of the spider plate (Figure 47).
3. Carefully lift the upper trowel/gearbox assembly off of the spider assembly. A light tap with a rubber mallet may be necessary to dislodge the spider from the main shaft of the gearbox.

Trowel Arm Removal

Remove the two remaining Zerk grease fittings and Allen head screws from the spider assembly (Figure 48).

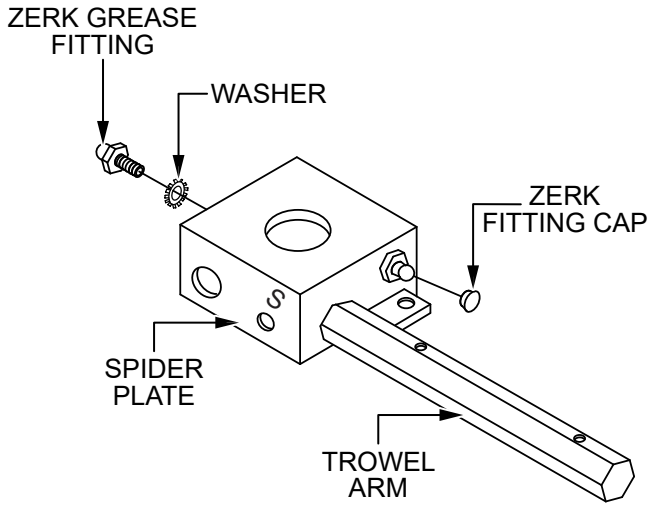

Figure 48. Trowel Arm Removal

Blade Replacement

It is recommended to replace **all** of the trowel blades at the same time. If only one or some of the blades are changed, the machine may wobble or bounce and will not finish concrete consistently.

NOTICE

Please note the orientation of each blade on the trowel arm before removal.

1. Place the trowel on a flat, level surface and pitch the blades as flat as possible.
2. Remove the two bolts and lock washers securing the blade to the trowel arm (Figure 49), then remove the blade.

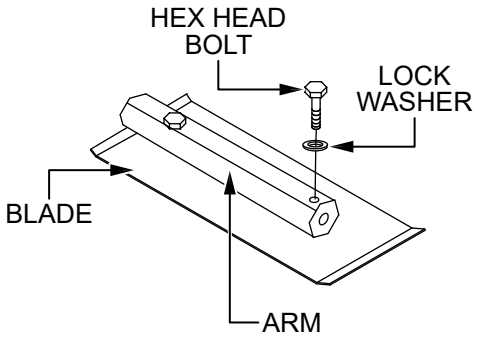

Figure 49. Blade Removal

3. Wire brush and remove all concrete and debris from all six sides of the trowel arm. This is important to properly seat the new blade.
4. Install the new blade onto the trowel arm, maintaining the proper blade orientation as noted during removal. Secure with the bolts and washers that were removed earlier.
5. Repeat steps 2–4 for the remaining three blades.

Reassembly

1. Clean the wear plates and thrust collar, and examine the entire spider assembly. Use a wire brush to remove any concrete or rust buildup. Replace any spider components that are damaged or out-of-round.
2. Inspect the bronze trowel arm bushing, and clean it if necessary. If the bushing is damaged, worn, or out-of-round, replace it.
3. Reinstall the trowel arm bushing onto the trowel arm.
4. Repeat steps 2–3 for each trowel arm.
5. Make sure the spring tensioner is in the correct position to exert tension on the trowel arm.
6. Insert all trowel arms with levers (and bronze bushings already installed) into the spider plate. Align the grease holes on the bushings with the grease hole fittings on the spider plate.
7. Lock the trowel arms in place by tightening the Zerk grease fitting hex head bolts and jam nuts.
8. Reinstall the blades onto the trowel arms.
9. Install the stabilizer ring onto the spider assembly.
10. Lubricate all grease points (Zerk fittings) with premium lithium 12-based grease, conforming to NLG1 grade #2 consistency.

Troubleshooting (Walk-Behind Trowel)		
Symptom	**Possible Problem**	**Solution**
Engine running rough or not at all.	Engine ON/OFF switch in OFF position or malfunctioning?	Make sure that the Engine ON/OFF switch is ON or replace switch if necessary.
	Centrifugal ON/OFF switch in OFF position or malfunctioning?	Place centrifugal stop switch in ON position. Check wiring. Replace switch if necessary.
	Fuel?	Check the fuel system. Make sure there is fuel being supplied to the engine. Check to ensure that the fuel filter is not clogged.
	Ignition?	Check to ensure that the ignition switch has power and is functioning correctly.
	Loose wire connections	Check wiring. Replace or repair as necessary.
	Bad contacts in ON/OFF switch?	Replace ON/OFF switch.
Trowel bounces, rolls concrete, or makes uneven swirls in concrete.	Blades?	Make certain blades are in good condition, not excessively worn. Finish blades should measure no less than 2" (50 mm) from the blade bar to the trailing edge. Combo blades should measure no less than 3.5" (89 mm). Trailing edge of the blade should be straight and parallel to the blade bar.
	Pitch adjustment?	Check that all blades are set at the same pitch angle as measured at the spider. A field adjustment tool is available for height adjustment of the trowel arms. (Contact Parts Dept.)
	Bent trowel arms?	Check the spider assembly for bent trowel arms. If one of the arms is even slightly bent, replace it immediately.
	Spider?	Check fit of arms in spider. This can be done by moving the trowel arms up and down. If there is more than 1/8 inch (3.2 mm) of travel at the tip of the arm, the spider and arms should be replaced.
	Thrust collar?	Check the flatness of the thrust collar by rotating it on the spider. If it varies by more than 0.02 inch (0.5 mm) replace the thrust collar.
	Thrust collar bushing?	Check the thrust collar by rocking it on the spider. If it can tilt more than 3/32 inch (2.4 mm) as measured at the thrust collar O.D., replace the thrust collar.
	Thrust bearing worn?	Check the thrust bearing to see that it is spinning freely. Replace if necessary.

Troubleshooting (Walk-Behind Trowel) - continued		
Symptom	**Possible Problem**	**Solution**
Machine has a perceptible rolling motion while running.	Main shaft?	The main output shaft of the gearbox assembly should be checked for straightness. The main shaft must run straight and cannot be more than 0.003" (0.08 mm) out of round at the spider attachment point.
	Yoke?	Check to make sure that both fingers of the yoke press evenly on the wear cap. Replace yoke as necessary.
	Blade Pitch?	Check to ensure that each blade is adjusted to have the same pitch as all other blades. Adjust per maintenance section in manual.
Clutch slipping or sluggish response to engine speed change.	Worn V-belts?	Replace V-belt.
	Hand clutch out of adjustment?	Adjust per instructions in maintenance section of this manual.
	Worn or defective hand clutch parts?	Replace parts as necessary.
	Worn bearings in gearbox?	Rotate input shaft by hand. If shaft rotates with difficulty, check the input and output shaft bearings. Replace as necessary.
	Worn or broken gears in gearbox?	Verify that the gearbox shaft rotates when the input shaft is rotated. Replace both the worm and worm gear as a set.
Trowel blades do not rotate.	Defective clutch?	Replace clutch.
	Broken V-belt?	Replace V-belt.
	Defective ON/OFF switch?	Check and replace ON/OFF switch if necessary.
	Defective centrifugal ON/OFF switch?	Check and replace centrifugal ON/OFF switch if necessary.

Troubleshooting (Engine)		
Symptom	**Possible Problem**	**Solution**
Difficult to start, fuel is available, but no spark at spark plug.	Spark plug bridging?	Check gap, insulation or replace spark plug.
	Carbon deposit on spark plug?	Clean or replace spark plug.
	Short circuit due to deficient spark plug insulation?	Check spark plug insulation, replace if worn.
	Improper spark plug gap?	Set to proper gap.
	Spark plug is red?	Check transistor ignition unit.
	Spark plug is bluish white?	If insufficient compression, repair or replace engine. If injected air leaking, correct leak. If carburetor jets clogged, clean carburetor.
	No spark present at tip of spark plug?	Check if transistor ignition unit is broken, and replace defective unit. Check if voltage cord cracked or broken and replace. Check if spark plug is fouled and replace.
	No oil?	Add oil as required.
	Oil pressure alarm lamp blinks upon starting? (if applicable)	Check automatic shutdown circuit, oil sensor. (if applicable)
Difficult to start, fuel is available, and spark is present at the spark plug.	ON/OFF switch is shorted?	Check switch wiring, replace switch.
	Ignition coil defective?	Replace ignition coil.
	Improper spark gap, points dirty?	Set correct spark gap and clean points.
	Condenser insulation worn or short circuiting?	Replace condenser.
	Spark plug wire broken or short circuiting?	Replace defective spark plug wiring.
Difficult to start, fuel is available, spark is present and compression is normal.	Wrong fuel type?	Flush fuel system, replace with correct type of fuel.
	Water or dust in fuel system?	Flush fuel system.
	Air cleaner dirty?	Clean or replace air cleaner.
	Choke open?	Close choke.
Difficult to start, fuel is available, spark is present and compression is low.	Suction/exhaust valve stuck or protruded?	Reseat valves.
	Piston ring and/or cylinder worn?	Replace piston rings and/or piston.
	Cylinder head and/or spark plug not tightened properly?	Torque cylinder head bolts and spark plug.
	Head gasket and/or spark plug gasket damaged?	Replace head and spark plug gaskets.
No fuel present at carburetor.	No fuel in fuel tank?	Fill with correct type of fuel.
	Fuel cock does not open properly?	Apply lubricant to loosen fuel cock lever, replace if necessary.
	Fuel filter/lines clogged?	Replace fuel filter.
	Fuel tank cap breather hole clogged?	Clean or replace fuel tank cap.
	Air in fuel line?	Bleed fuel line.

Troubleshooting (Engine) - continued		
Symptom	**Possible Problem**	**Solution**
Weak in power, compression is proper and does not misfire.	Air cleaner dirty?	Clean or replace air cleaner.
	Improper level in carburetor?	Check float adjustment, rebuild carburetor.
	Defective spark plug?	Clean or replace spark plug.
	Improper spark plug?	Set to proper gap.
Weak in power, compression is proper but misfires.	Water in fuel system?	Flush fuel system and replace with correct type of fuel.
	Dirty spark plug?	Clean or replace spark plug.
	Ignition coil defective?	Replace ignition coil.
Engine overheats.	Wrong type of fuel?	Replace with correct type of fuel.
	Cooling fins dirty?	Clean cooling fins.
	Intake air restricted?	Clear intake of dirt and debris. Replace air cleaner elements as necessary.
	Oil level too low or too high?	Adjust oil to proper level.
Rotational speed fluctuates.	Governor adjusted incorrectly?	Adjust governor.
	Governor spring defective?	Replace governor spring.
	Fuel flow restricted?	Check entire fuel system for leaks or clogs.
Recoil starter malfunctions. (if applicable)	Recoil mechanism clogged with dust and dirt?	Clean recoil assembly with soap and water.
	Spiral spring loose?	Replace spiral spring.
Starter malfunctions.	Loose, damaged wiring?	Ensure tight, clean connections on battery and starter.
	Battery insufficiently charged?	Recharge or replace battery.
	Starter damaged or internally shorted?	Replace starter.
Burns too much fuel.	Over-accumulation of exhaust products?	Check and clean valves. Check muffler and replace if necessary.
	Wrong spark plug?	Replace spark plug with manufacturer's suggested type.
Exhaust color is continuously white.	Lubricating oil is wrong viscosity?	Replace lubricating oil with correct viscosity.
	Worn rings?	Replace rings.
Exhaust color is continuously black.	Air cleaner clogged?	Clean or replace air cleaner.
	Choke valve set to incorrect position?	Adjust choke valve to correct position.
	Carburetor defective, seal on carburetor broken?	Replace carburetor or seal.
	Poor carburetor adjustment, engine runs too rich?	Adjust carburetor.
Will not start, no power with key ON. (if applicable)	ON/OFF device not activated ON?	Turn on ON/OFF device.
	Battery disconnected or discharged?	Check cable connections. Charge or replace battery.
	Ignition switch/wiring defective?	Replace ignition switch. Check wiring.

OPERATION MANUAL

HERE'S HOW TO GET HELP

PLEASE HAVE THE MODEL AND SERIAL NUMBER ON-HAND WHEN CALLING

UNITED STATES

Multiquip Inc.

(310) 537- 3700
6141 Katella Avenue Suite 200
Cypress, CA 90630
E-MAIL: mq@multiquip.com
WEBSITE: www.multiquip.com

CANADA

Multiquip

(450) 625-2244
4110 Industriel Boul.
Laval, Quebec, Canada H7L 6V3
E-MAIL: infocanada@multiquip.com

UNITED KINGDOM

Multiquip (UK) Limited Head Office

0161 339 2223
Unit 2, Northpoint Industrial Estate,
Globe Lane,
Dukinfield, Cheshire SK16 4UJ
E-MAIL: sales@multiquip.co.uk

© COPYRIGHT 2024, MULTIQUIP INC.

Multiquip Inc, the MQ logo are registered trademarks of Multiquip Inc. and may not be used, reproduced, or altered without written permission. All other trademarks are the property of their respective owners and used with permission.

This manual MUST accompany the equipment at all times. This manual is considered a permanent part of the equipment and should remain with the unit if resold.

The information and specifications included in this publication were in effect at the time of approval for printing. Illustrations, descriptions, references and technical data contained in this manual are for guidance only and may not be considered as binding. Multiquip Inc. reserves the right to discontinue or change specifications, design or the information published in this publication at any time without notice and without incurring any obligations.

MULTIQUIP®

PN: 21768