A Division of TUXEDO Distributors, LLC.

Paint Spray Booths

Side Downdraft
Installation & Maintenance Manual

Tuxedo Distributors, LLC.
8320 E. Hwy 67
Alvarado, TX. 76009
www.idealautoequip.com
www.tuxedoautoequip.com
877-558-9337

1. INTRODUCTION

1.1 Introduction..... 4
1.2 Receiving, Unpacking, and Reporting Missing Items..... 4

2. SAFETY

2.1 Safety Alert Symbol and Signal Words 5
2.1.1 Assembly Hazards..... 5-6
2.1.2 Operational Hazards..... 6-7
2.1.3 Maintenance Hazards..... 7
2.1.4 Fire Hazard..... 8
2.2 NFPA 33 8

3. COMPONENT DESCRIPTION

3.1 Compliance to Applicable Codes..... 8
3.2 Material Specifications..... 8
3.3 General Description 8
3.3.1 Paint Area..... 8
3.3.2 Exhaust Fan and Chambers..... 9
3.3.3 Product Doors..... 9
3.3.4 Door Latch..... 9
3.3.5 Door Limit Switch..... 9
3.3.6 Air Make Up Unit (Optional) 9
3.3.7 Intake Plenum / Canopy (Optional)..... 9
3.4 Exhaust Filter Manometer 9
3.5 Air Solenoid Valve..... 9
3.6 Control Panel..... 9

4. INSTALLATION

4.1 General..... 10
4.2 Preliminary 10
4.3 Planning Ahead..... 10
4.4 Basic Booth Assembly..... 10-17
4.5 Light Fixtures..... 18-19
4.6 Manometer..... 20-22
4.7 Exhaust Filter Installation..... 23
4.8 Intake Filter Installation..... 23
4.9 Motor Installation..... 23
4.9.1 Mounting..... 23
4.9.2 Install Sheaves and Fan Belts..... 23
4.9.3 Electrical..... 24
4.10 Tube Axial Fan..... 25
4.11 (Optional) Exhaust Duct Kit & Installation..... 25
4.12 Product Doors..... 26-29
4.13 Access Door Limit Switch Installation 28
4.14 Access Door Latch Installation..... 28
4.15 Product Door Limit Switch& Latch Installation..... 39
4.16 Limit Switch Wiring..... 30-31
4.17 Air Solenoid Wiring..... 30-31
4.18 Checklist..... 32

5. MAINTENANCE

5.1 Maintenance Interval Cart 33-34
5.2 Daily..... 33
5.2.1 Inspect Filters 33
5.2.2 Filter Maintenance 33
5.2.3 Determine Filter Condition 33
5.3 Every Two Months..... 34
5.3.1 Lubricate Door Latches 34
5.4 Every Six Months 34
5.4.1 Check Fan Belts 34
5.5 Every Year..... 34
5.5.1 Inspect Motor..... 34
5.5.2 Inspect Fan Wheel..... 34
5.5.3 Inspect And Clean Air Solenoid Valve..... 34

6. WARRANTY

6.1 Returning Items For Credit..... 35
6.2 Back Charges For Material And Labor 35

Please read and understand this manual before using your booth.

Thank you for your iDEAL Paint Spray Booth purchase!!

1. INTRODUCTION

1.1 INTRODUCTION

This manual explains the assembly and routine maintenance of iDEAL Paint Spray Booths.It is essential tofollow all of the safety instructions, along with keeping this manual with your Paint Spray Booth at all times.

The iDEAL Paint Spray Booths consist of four major components, depending on the model:

- Paint Booth
- Product Doors
- Exhaust Fan(s) and Chimney Stacks
- In some cases, an Air Make-Up Unit (AMU)

A brief description is provided for these and other related items.

The text contained in this manual is for current production models. Some instructions and maintenance procedures may not apply to your specific unit. Equipment modifications from original design and specifications are strictly prohibited. Modifications may compromise safe operation of the booth, subjecting users to serious injury or death and may void any remaining warranty. This Operator's Manual does not replace, nor does its release the operator from observing all safety oroperating limitations as well as any applicable federal, state, provincial or local regulations.

1.2 RECEIVING, UNPACKING, AND REPORTING MISSING ITEMS

Tuxedo Distributors (iDEAL) will do everything possible to ensure you receive your equipment on time, free from damage and with all required parts. Per company policy, two independent checks are performed to verify each item against the packing list. However, since we are shipping by common carrier, the following procedures must be followed:

When receiving and unloading equipment check for damage. Note on Bill of Lading "FREIGHT DAMAGE."
Notify the Tuxedo Distributors customer service department immediately (on day of delivery) of any damage.

Unpack all items and verify against packing list within ten (10) days of receipt. Notify Tuxedo Distributors customer service department of missing items and discrepancies immediately (within 10 days at the latest).

If there are any missing items from your shipment, they will be shipped as follows:
Items that can be shipped UPS usually take from one to three days to receive, depending on distance. Items too large for UPS will ship via common freight. This shipping method typically takes from one to five days to reachthe destination. Tuxedo Distributors will not pay for overnight freight on missing items. If overnight freight is necessary, the buyer shall be accountable for overnight freight costs.

If Tuxedo Distributors determines that the reported shortage was checked off in our records, replacement parts will be shipped AND invoiced accordingly.

During the warranty period, Tuxedo Distributors will have the option to repair or replace, free of charge, any parts that Tuxedo Distributors has verified to be defective in materials or workmanship. If inspection of the equipment does not disclose any defect in workmanship of material, repaired or replacement parts will be offered at a reasonable price, which will include the costs of labor, materials, and transportation.

2. SAFETY

2.1 SAFETY ALERT SYMBOL AND SIGNAL WORDS

Before assembling, operating, or servicing the spray booth, you must read, understand and follow the instructionsand safety warnings in this manual. Your spray booth may not be equipped with some of the optional equipment described in this manual.

NEVER ALLOW ANYONE TO OPERATE THIS EQUIPMENT WITHOUT PROPER TRAINING!

The safety information in this manual is denoted by the safety alert symbol:
The level of risk is indicated by the following information:

⚠ DANGER

DANGER - Indicates a hazardous situation, which, if not avoided, WILL result in death or serious injury.

⚠ WARNING

WARNING - Indicates a hazardous situation, which, if not avoided, could result in death or serious injury.

⚠ CAUTION

CAUTION - Indicates a hazardous situation, which, if not avoided, could result in minor or moderate injury.

NOTICE

NOTICE - Indicates a situation that could result in damage to the equipment or other property.

2.1.1 Assembly Hazards

⚠ WARNING

Prevent serious injury or death.

Overriding a safety system may result in unsafe equipment, which may result in serious injury or death.

Do not override safety devices.

⚠ WARNING

Blade hazard. Keep hands clear of rotating parts.

Follow lockout procedure before servicing.

⚠ WARNING

Prevent serious injury or death.

Use adequate lifting devices to raise, move and install booth components.

⚠ WARNING

Prevent serious injury or death.

Electrical installations must be performed by qualified electricians.

Installation must conform to all national, local, and provincial codes and standards.

2.1.2 Operational Hazards

⚠ WARNING

Prevent serious injury or death.

Do not operate machine with guards and/or covers open or removed.

⚠ WARNING

Prevent serious injury or death.

Only trained and qualified personnel may operate booth.

⚠ WARNING

Prevent serious injury or death.

Never operate spray booth while under the influence of drugs, alcohol or while feeling ill.

⚠ WARNING

Prevent serious injury or death.

Always wear personal protective equipment (PPE) appropriate for job.

Read Material Safety Data Sheet for products used in spray booth.

⚠ WARNING

Shock hazard.

Only a qualified electrician may open electrical control cabinet.

Disconnect and lockout / tagout all power sources before adjusting, repairing, or cleaning booth.

2.1.3 Maintenance Hazards

⚠ WARNING

Prevent serious injury or death.

Disconnect and lockout / tagout all power sources before adjusting, repairing, or cleaning booth.

⚠ WARNING

Prevent serious injury or death.

Service, maintenance and adjustments must be performed by trained and qualified personnel.

⚠ WARNING

Burn hazard. Do not touch hot parts.

Allow to cool before servicing.

⚠ WARNING

Prevent serious injury or death.

Always wear personal protective equipment (PPE) appropriate for job.

Read Material Safety Data Sheet for products used in spray booth.

2.1.4 Fire Hazard

No smoking or open flame in or near spray booth. Local fire codes prohibit smoking in the vicinity of spray painting operations.

⚠ WARNING

Explosion and fire hazard.

No smoking or open flame within 50 feet of spray booth.

DO NOT STORE FLAMMABLE LIQUIDS ADJACENT TO OR INSIDE SPRAY BOOTH. READ ALL PRODUCT LABELS AND INSTRUCTIONS. DO NOT USE ANY ELECTRIC POWERED AIRLESS SPRAY RIGS, PRESSURE WASHERS OR SIMILAR EQUIPMENT WHEN APPLYING A LOWFLASH POINT SOLVENT OR PEEL COATING. RUN SPRAY BOOTH EXHAUST FAN TO PURGE DANGEROUS VAPORS THAT COULD IGNITE OREXPLODE WHILE CLEANING OR PERFORMING MAINTENANCE INSIDE SPRAY BOOTH.

AN APPROVED FIRE PROTECTION SYSTEM MUST BE INSTALLED ON YOUR SPRAY BOOTH TO COMPLY WITH NFPA 33, SECTION 9. PORTABLE FILE EXTINGUISHERS MUST BE LOCATED IN OR AROUND YOUR PAINT MIX ROOM PER NFPA 10.

2.2 NFPA 33-2011

The NFPA 33-2011, Standard for Spray Application Using Flammable or Combustible Materials, Copyright © 2010, National Fire Protection Association can be freely accessed & viewed online at:

http://www.nfpa.org/codes-and-standards/document-information-pages?mode=code&code=33

3. COMPONENT DESCRIPTION

3.1 COMPLIANCE TO APPLICABLE CODES

This Spray Booth is designed to be in accordance with the National Fire Protection Association standard NFPA 33 “Spray Application Using Flammable Combustible Materials. The NFPA Standard Safety Code forthe Design, Construction and Ventilation of Spray Finishing Operations.” This spray booth meets or exceeds the requirements of the Occupational Safety and Health Administration (OSHA).

3.2 MATERIAL SPECIFICATIONS

The spray booth panels, filter racks and product doors are constructed of 18- gauge steel, conforming to ASTM A527 “Lock Forming Quality”. All structural steel conforms to ASTM A36.

3.3 GENERAL DESCRIPTION

The spray booth consists of four major components: paint area, exhaust fan and chamber, product doors and, insome cases, an air make-up unit. A brief description is provided for these and other related items.

3.3.1 Paint Area

The paint area is the actual “booth” part of the spray booth. Parts are placed in this area, through product doors, if so equipped, to be painted. Air flows from the intake filters of the booth to the exhaust filters. The booth is constructed of 18-gauge galvanized sheet metal panels which are bolted together. The booth exhaust is routed through the exhaust chamber at the side or end of the booth. The exhaust fan(s) then routes the exhaust out through the exhaust duct(s) and discharges it at a point above the roof height of the building.

3.3.2 Exhaust Fan And Chambers

The booth exhaust chamber(s) is/are located as shown in the mechanical drawing package included with this manual. Exhaust gases are pumped through the exhaust duct by an electrically powered fan. The fan is made of spark resistant material and the motor is located out of the air stream. The exhaust chamber(s) operate(s) under a negative pressure to induce the required airflow through the exhaust filters.

3.3.3 Product Doors

The product doors can be filtered or solid and may be either Tri-Fold or Bi-Fold Doors. Some industrial spray booths have an open front in lieu of product doors.

3.3.4 Door Latch

Door latches secure doors in closed position and hold contact against rubber seal. Latches are pressure relief latches that allow doors to open in case of explosion. This feature also allows for ease of booth operator egress from spray booth by applying moderate pressure to the door from inside booth.

3.3.5 Door Limit Switch

The micro switch to indicate when a door is open on the booth. If a door is in the open position, micro switch contact is opened which breaks the circuit for the paint air solenoid.

3.3.6 Air Make Up Unit (Optional)

The air make up unit (AMU) supplies filtered, heated atmospheric air. This unit may be heated by natural gas, LP gas, steam coils or hot water coils. The temperature of the AMU discharge air is controlled by a thermostat. The airflow capacity of the fan and motor are matched to the airflow capacity of the spray booth exhaust fans. Some air makeup units also have the capability to provide a paint cure cycle. This cycle, employed after the paintspraying operations are complete, typically involves supplying air that is heated to the paint area of the booth todecrease paint cure times.

3.3.7 Intake Plenum / Canopy (Optional)

The box-like structure through which (heated) air is brought into the spray booth and typically used in conjunction with the Air Make Up Unit. May be vertical and located at one end of the booth, or horizontal using part or all of the ceiling inside the booth.

3.4 EXHAUST FILTER MANOMETER

Manometer is used to measure pressure drop across exhaust filters to indicate the condition of the filters.

3.5 AIR SOLENOID VALVE

The function of this valve is to interrupt supply of compressed air to painting equipment under certain conditions. This is done to prevent painting from occurring when booth is not operating as designed or if any booth doors are open. Air solenoid valve is electrically interlocked with booth intake and exhaust fans. If limit switches are purchased or included, it is also interlocked with product doors and personnel doors. If a fan is not operating properly, or if a door is open for longer than a few seconds, air solenoid valve will shut off flow of pressurized air to spray gun. Unit should be installed downstream of any regulators and filters and upstream of painting equipment. It should be located near fitting to which painting equipment connects in order to insure rapid loss of supply pressure.

3.6 CONTROL PANEL

Paint spray booth may be equipped with an optional electrical control panel. Please refer to electrical control drawings for electrical schematic located inside the Control Panel. Also shown on this drawing is the wiring required for installation. No spare parts are provided with Control Panel. The Control Panel and its associated wiring should be installed by a licensed electrician. The cabinet that houses controls is NEMA 1 and is not suitable for installation in a Class I, Division II area. Refer to Chapter 6 in the NFPA 33-2011 Standard and consult with the local authority having jurisdiction for definition of this area for paint spray booth.

4. INSTALLATION

4.1 GENERAL

This manual is a guide for installing a variety of different spray booths and configurations. The assembly drawings enclosed are specific for the booth you have purchased. The drawings include exploded isometric drawings showing the relationship of each panel or part to the next one. A BOM / Packing List of all components is provided and must be used in addition to the drawing to identify all components.

NOTE: All DAMAGES MUST be reported within 24 hours of receipt and a freight claim filed with the carrier.

4.2 PRELIMINARY

iDEAL booths are manufactured in accordance with NFPA 33, UFC 45 and NEC 516. However, local codes and regulations may apply to the installation and use of this product. All permits and approvals must be obtained prior to installation and use of the spray booth.

1. Uncrate and inventory all spray booth components to ensure all of the parts are accounted for. Each component is numbered on the exploded view.
2. The floor surface of the booth must be non-combustible material of such character as to facilitate the safecleaning and removal of residues. The floor surface must be flat and level.
3. Mark the dimensional outline of booth on floor.
4. Follow the step-by-step instructions provided.

4.3 PLANNING AHEAD

1. Clearances between other work areas and combustible storage areas must be held as follows:
    - 3 ft. minimum clearance at all sides and sealed entry ways (i.e., doorways).
    - 3 ft. minimum clearance at all non-sealed entry ways - (i.e. the open face of spray booth or a silhouette openings).
    - 10 ft. minimum clearance must be held between the exhaust stack of the booth and the intake of another apparatus. NFPA 33-2011 dictates a minimum discharge clearance of 3 ft. from the nearest combustible material; however, stack height requirements vary with individual states and can be up to 1½ times the building's roof height from grade.
    - 10 ft. minimum clearance must be held between the intake of this booth and the exhaust of any other apparatus.
2. Permits are not included. **It is the responsibility of the end user to acquire all permits to install a booth.**
3. A FIRE SUPRESSION SYSTEM IS NOT INCLUDED WITH THE BOOTH BUT IT IS TYPICALLY REQUIRED. Generally, this is supplied and installed by a licensed local installer.
4. Electrical installation should be performed by a licensed electrician familiar with national, local electrical codesand regulations in your location.

4.4 BASIC BOOTH ASSEMBLY

When assembling booth, leave bolts finger tight until each section is assembled. All panel flanges should face outward. Install bolts from inside, so nut is outside of booth. Use a drift pin to align panel holes when two or more panels are difficult to align by hand. Lay out booth footprint on floor using chalk lines to be sure booth will fit the area properly, so that exhaust duct(s) will penetrate roof where desired and any associated items will work and fit with the booth.

⚠ WARNING

Prevent serious injury or death.

Most booth components weigh 50-500 lbs.

Use adequate lifting devices to raise, move and install booth components.

NOTICE

Prevent equipment damage.

Spray booth roof will not support a person. Do not attempt to stand or walk on spray booth roof.

NOTE: Refer to exploded view drawings included with your spray booth for installation details.

Basic Installation - First Section:

1. Determine where booth will be constructed (determine where exhaust stacks will exit through the roof) and where man door(s) will be placed.
2. Use chalk lines to place booth layout on the floor.
3. Starting with rear or front wall panels at either rear corner, bolt one corner panel & one rear wall corner panel together on chalk lines.
4. Bolt opposite rear or front sidewall panel to rear wall panel on chalk lines.
5. Bolt all rear or front wall panels in place along with their wall panels.
6. Install the hip support angles (if applies) on the right and left frontal back wall panels.
7. Following exploded view drawings, continue assembling wall panels to each other and to the wall panel beam supports (T-Bars) for the first section of booth.
8. Install the ceiling blank cross support panel between the two wall panel beam hip beams.
9. Install the two hip panels (be sure intake air flat tab is at top of panel).
10. Verify walls are plumb and section is square and on floor layout marks.
11. Install filter grid spacer panels.
12. Square and level all panels shimming from the bottom of the panels. Be sure all joints are plumb and corners square. Tighten all bolts and nuts as panels are squared and leveled.
13. Anchor panels to floor.
14. Note: If using intake plenum/canopy box, install intake box back panel on top of back wall panel bolting the two side panels to the back panel.Install three roof panels on top of the intake plenum/canopy boxback and wall panels.

(See Assembly Detailed Diagrams for details)

T-Bar Assembly Detail

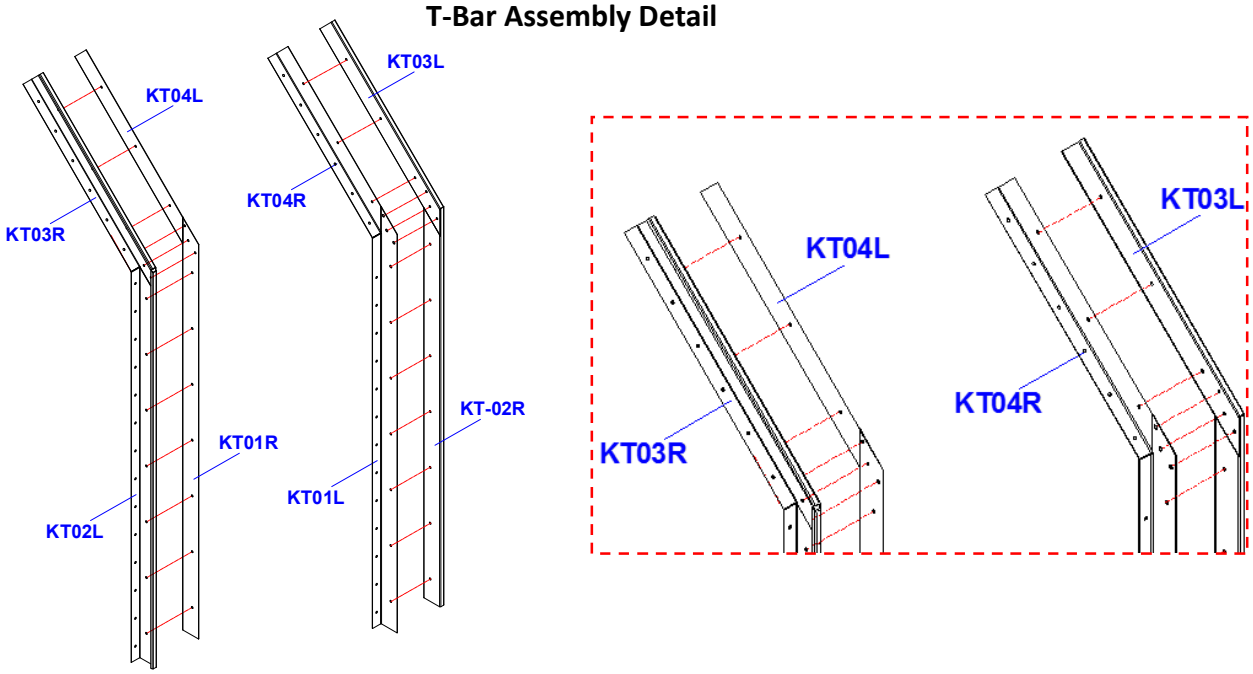

Basic Installation - Second Section:

1. Bolt exhaust filter grid side spacer assemblies and the exhaust grid header panel in the bottom of wall panel beam supports for the first and second sections of the booth. Repeat on opposite side of the booth.
2. Install the ceiling blank cross support panel between the two wall panel beam hip beams.
3. Bolt the next two panels on top of the exhaust grid header panel. Repeat on opposite side of the booth.
4. Install the two hip panels (be sure intake air flat tab is at top of panel).
5. Verify walls are plumb and section is square and on floor layout marks.
6. Install filter grid spacer panels.
7. Square and level all panels shimming from the bottom of the panels. Be sure all joints are plumb and corners square. Tighten all bolts and nuts as panels are squared and leveled.
8. Anchor panels to floor.
9. Note: If using intake plenum/canopy box, install intake box side panels on top of hip panels, bolting it to the hip. Install the roof panels on top of the intake plenum/canopy box wall panels.

Basic Installation - Third Section:

1. Bolt exhaust filter grid side spacer assemblies and the exhaust grid header panel in the bottom of wall panel beam support for the second section of the booth. Repeat on opposite side of the booth.
2. Install the hip support angles on the right and left frontal front wall panels.
3. Bolt the front wall panel at either front corner to one of the side wall panels together and attach these two panels to the exhaust filter grid side spacer assembly in step 1. Repeat on opposite side.
4. Bolt the next two panels on top of the exhaust grid header panel. Repeat on opposite side of the booth.
5. Install the two hip panels (be sure intake air flat tab is at top of panel).
6. Verify walls are plumb and section is square and on floor layout marks.
7. Install product door side door jambs and cross jamb between the two frontal panels.
8. Place header panel on top of cross door jamb and bolt together.
9. Check product door frame for square and level. Square and level all panels shimming from the bottom of the panels. Be sure all joints are plumb and corners square. Tighten all bolts and nuts as panels are squared and leveled.
10. Install filter grid spacer panels.
11. Note: If using intake plenum/canopy box, install intake box side panels on top of hip panels, bolting it to the hip. Install front panel on top of header panel on top of cross door jamb back wall panel bolting the two side panels to the front panel on top of header pane panel. Install the roof panels on top of the intake plenum/canopy box wall panels.

<u>Intake Filter Grid Installation</u> (NOTE: 2” side of angle goes up and smaller angle sticks out horizontally)

<u>Small ‘Ends’ Filter Grid Sections</u>

1. Screw two 40” angles (KC02) to the 80” side of the small intake filter opening using #8 drill screws. Repeat on opposite side of small intake filter opening.
2. Screw one 99-1/2“angle (KC01) to the 100” side of the small intake filter opening using #8 drill screws. Repeat on opposite side of small intake filter opening.
3. Screw three sets of two 99-1/2” (KC01) angles together back to back.
4. Place these sets across the small intake filter opening on 20” centers and screw in place.
5. Screw four sets of two 19-1/2” (KC03) angles together back to back.
6. Place these sets across the 20” opening formed by the sets of 99-1/2” angles on 50” centers and screw in place. This forms 20”x50” rectangles for intake filters.
7. Repeat above in second small opening, <u>after</u> Large Filter Grid is installed.

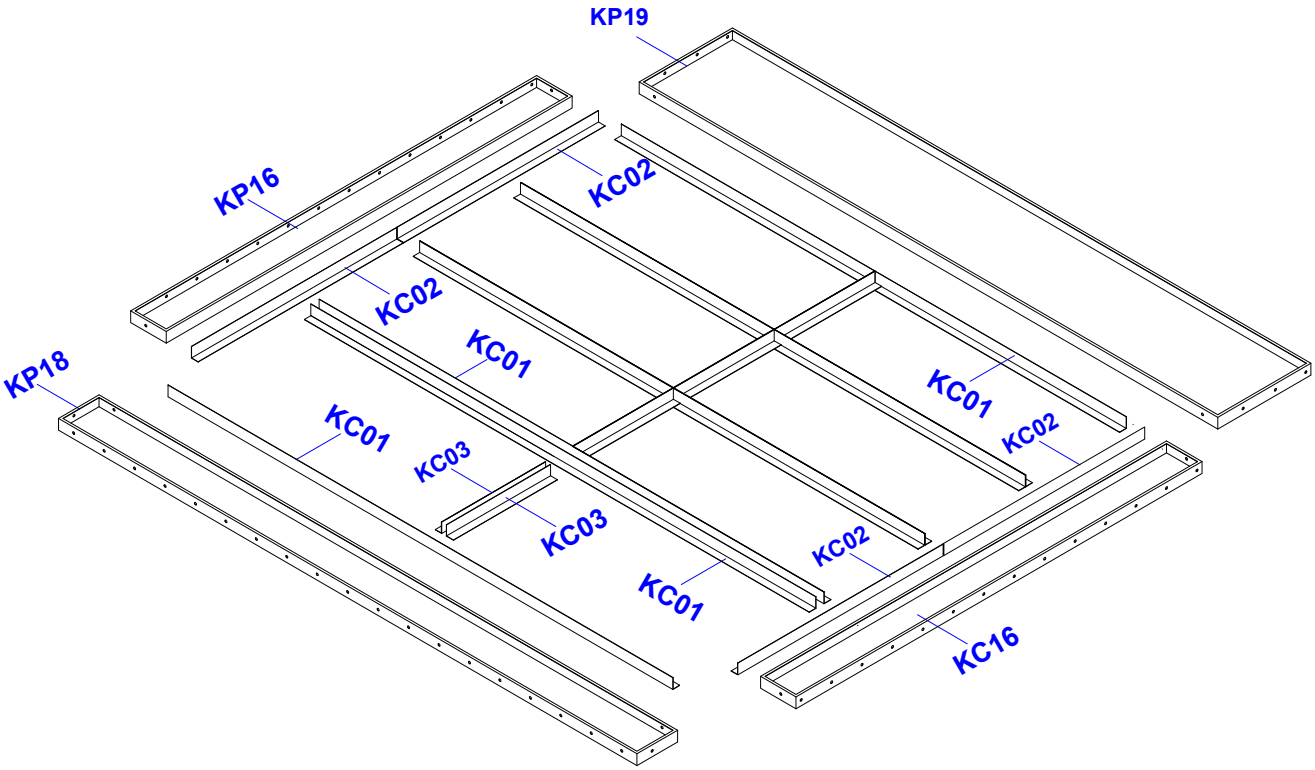

Intake Filter Grid Installation – Continued (NOTE: 2” side of angle goes up and smaller angle sticks out horizontally)

Large ‘Center’ Filter Grid Section

1. Screw one 99-1/2” angle (KC01) to the 100” side of the intake filter opening using #8 drill screws. Repeat on opposite side.
2. Screw one 99-1/2“angle (KC01) to the other 100” side of the intake filter opening using #8 drill screws. Repeat on opposite side of small intake filter opening.
3. Screw four sets of two 99-1/2” angles (KC01) together back to back.
4. Place these sets across the small intake filter opening on 20” centers and screw in place.
5. Screw five sets of two 19-1/2” angles (KC03) together back to back.
6. Place these sets across the 20” opening formed by the sets of 99-1/2” angles on 50” centers and screw in place. This forms 20”x50” rectangles for intake filters.

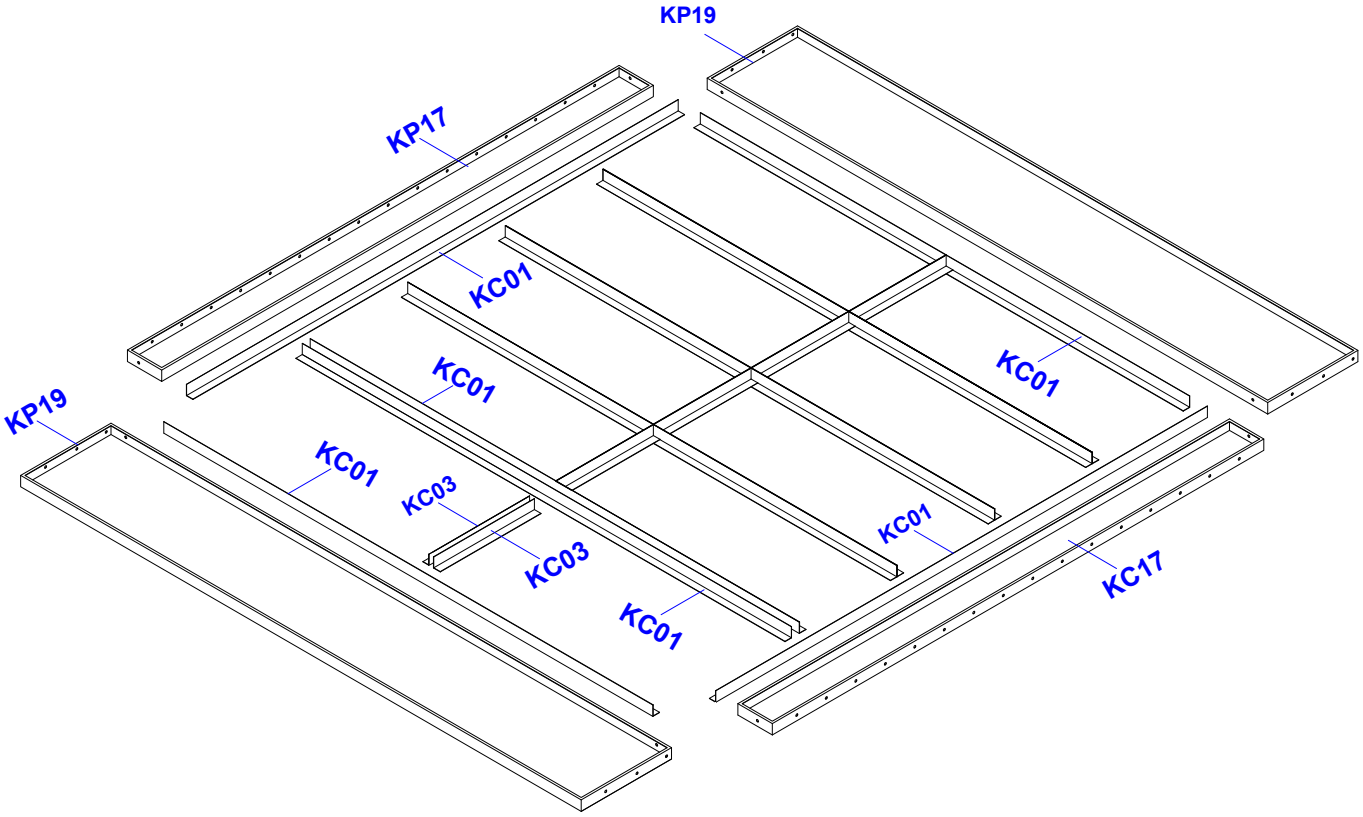

Exhaust Filter Grid(s) Installation:

Small 'End' Filter Grid Sections

1. Using #8 drill screws screw a 40" angle (KC02) to the top of the opening.
2. Screw a 19-3/4" angle (KC03) to both ends of the opening.
3. Screw a 40" angle (KC02) between the two side angles at the bottom of the opening.
4. Place a 2"x19-3/4"flat strip (KC04) vertically in the center of the opening and screw in place from the backside of the frame.
5. Place a 2"x40" flat strip (KC06) horizontally in the center of the opening and screw in place from the backside of the frame.
6. Cut a piece of the roll blanket filter to fit opening and push in place.

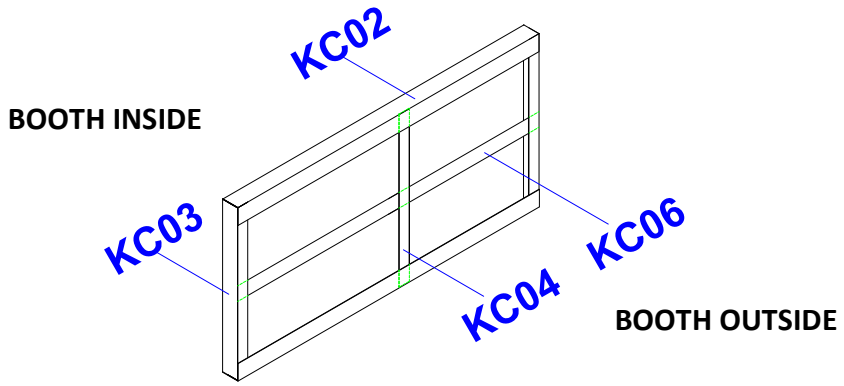

Large 'Center' Filter Grid Section

1. Using #8 drill screws screw a 100" (KC01) angle to the top of the opening.
2. Screw a 19-3/4" angle (KC03) to both ends of the opening.
3. Screw a 100" angle (KC01) between the two side angles at the bottom of the opening.
4. Place 4 each 2"x19-3/4" flat strips (KC04) vertically on 20" centers in the opening and screw in place from the backside of the frame.
5. Place a 2"x100" flat strip (KC05) horizontally in the center of the opening and screw in place from the backside of the frame.
6. Cut a piece of the roll blanket filter to fit opening and push in place.

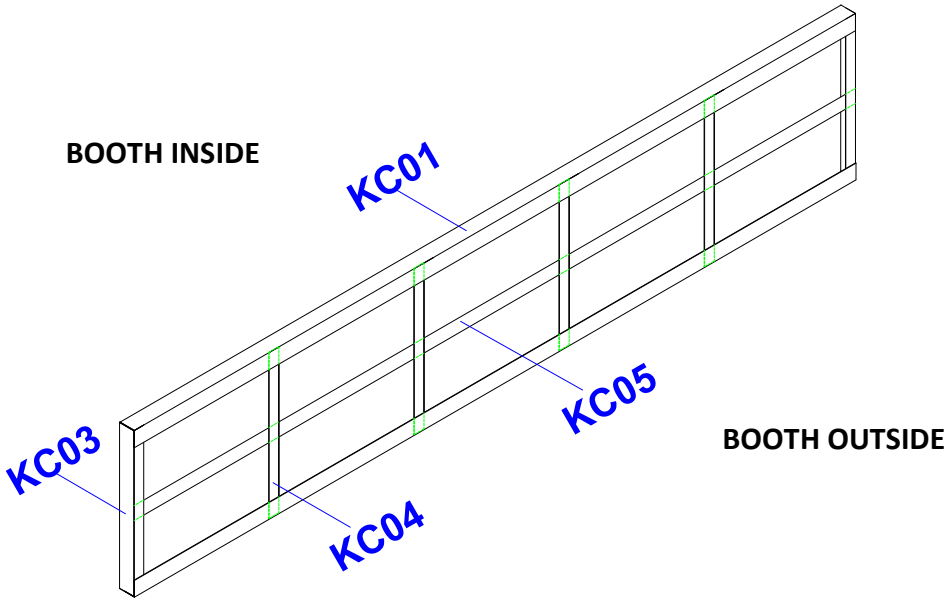

Exhaust Boxes

1. Attach panel (KP33) to exhaust grid side spacer (KP30L).
2. Attach panel (KP33) to exhaust grid side spacer (KP30R) at other end of exhaust grids.
3. Screw flat panel (KP36) over the exhaust grid side spacers (KP32R) and (KP29R) covering the opening. Repeat on opening at other end of exhaust grids.
4. Place joint splicer (KP37) on inside corner of exhaust box side cover (KP34) with half of it sticking out to be joined later with exhaust box side cover (KP35).
5. Place joint splicer (KP37) on inside corner of exhaust box side cover (KP35) with half of it sticking out to be joined later with exhaust box side cover (KP34).
6. Place the (KP34) panel with the joint splicer against the (KP28R) panel and the (KP33) panel. Screw it flush to these panels.
7. Set the exhaust stack support frame on the floor at the end of the (KP34) where the joint splicer is.
8. Place the (KP35) panel against the (KP31) panel and the (KP37) joint splicer. Screw this panel to these two panels leaving the exhaust stack support inside of the (KP35) panel.
9. Place the second (KP34) panel against the (KP28L, KP33 and the KP37) joint splicer. Screw this panel to the three panels.
10. The hole for the exhaust stack will be field located and cut later.
11. Anchor the bottom tabs of panels (KP34) and (KP35) to the floor using 1/4”x1” drive anchors.
12. Repeat above on opposite side of booth.

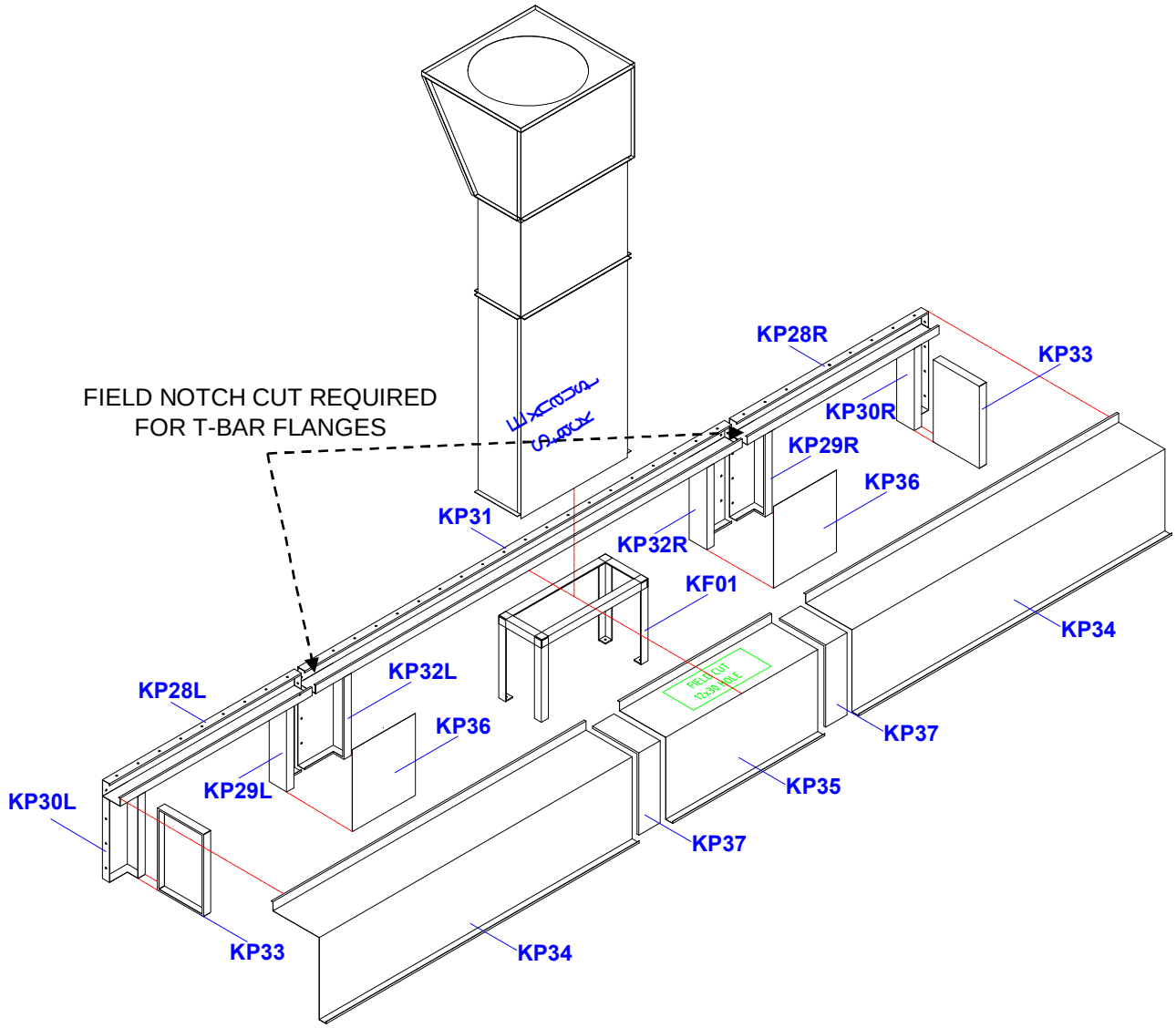

Exhaust Chimney Stack Assembly

1. Screw panel 12x30x48 panel (KF03-001) to 12x30x48 with 1 Tab Down flange (KF03-002).
2. Screw panel 12x30x24 to the other panel 12x30x24 (KF03-003).
3. Place panel 12x30x24 on top of panel 12x30x48 1 Tab Down. Screw them together using 1” tabs.
4. Place the back edges of panel 24x32 (KF03-004) flush on the front of the slant edges of panels 22x24x12L (KF03-006) and 22x24x12R (KF03-007)and clamp together. Screw these panels together along slanted edges.
5. Place the front edges of panel 22x32 (KF03-005) flush on back edges of panels 22x24x12L (KF03-006) and 22x24x12R (KF03-007) and clamp together. Screw these panels together along the edges.
6. Place flat bottom face of panel 28x32 (KF03-008) on top of the panels above and screw together.
7. Place the assembly you just made on top of the assembly made in step 3 above with the slanted panel facing away from the downward tab that is on the bottom assembly. Screw these sections together using the 1” tabs.
8. Repeat above for second stack on opposite side of the booth.
9. The exhaust stacks are designed to set on top of the side exhaust boxes with the exhaust mounted on their top flat surface with the hole. These exhaust stacks can be located on the side exhaust box so the exhaust duct going through the roof will miss any structural beams, pipes etc. You should field cut the rectangular hole for the exhaust stack so it matches the position where it needs to be. The support stand is then placed below the exhaust stack to support the weight of the stack, fan and duct work.

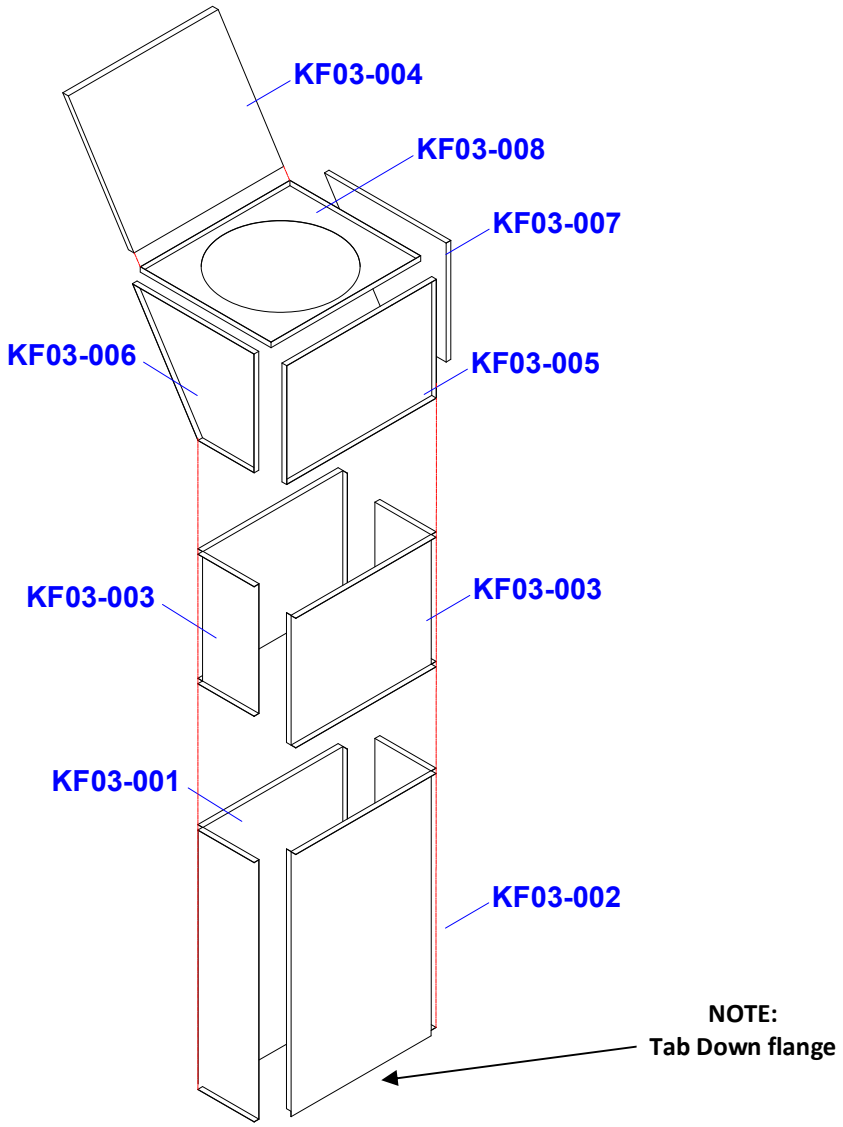

4.5 LIGHT FIXTURES

⚠ WARNING

Prevent serious injury or death.

Electrical installations must be performed by qualified electricians.

Installation must conform to all national, local, and provincial codes and standards.

CLASS I DIV II LIGHTS

1. Place light fixture through booth panel line up with mounting holes.
2. Install bolts through light and panel holes and secure using nuts on outside of panel.
3. The fixture is provided with an interlock switch that has a normally open contact, which opens when the fixture lens is removed from fixture. The switch is to be wired to disable spray equipment used in spray booth.

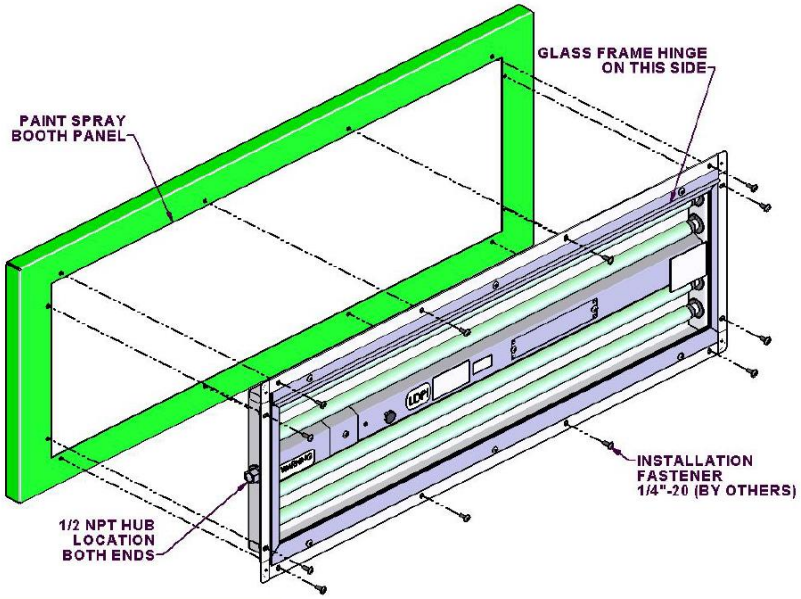

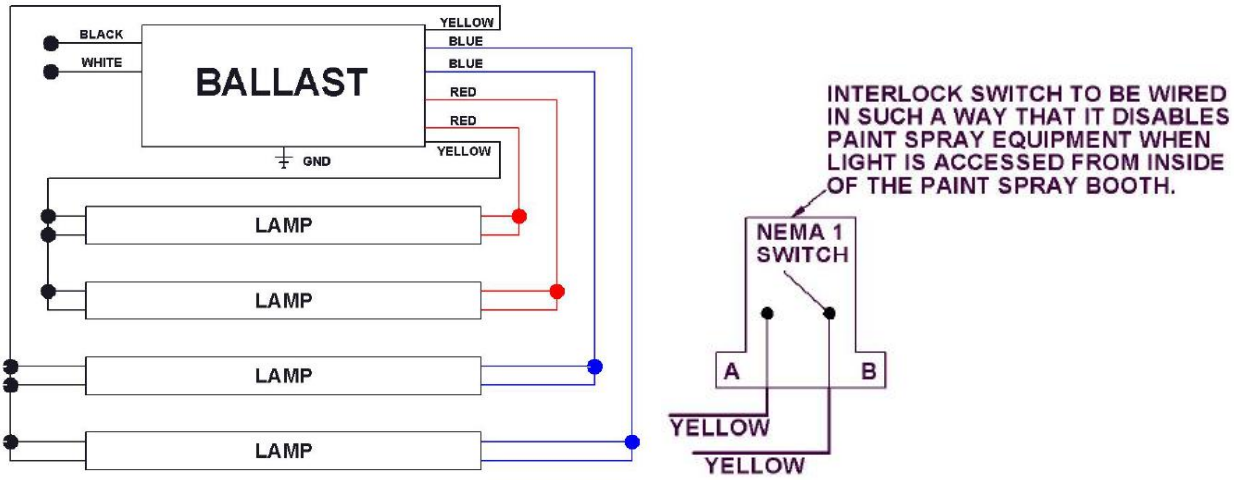

STANDARD LIGHTS

1. Install top and bottom guide angle pieces (KP02-002) above and below the light opening hole per drawing. Insert bolts through wall panel hole and then through the guide angle flange and secure with nut.
2. Place a 1/4" to 1/2" bead of caulk around the edge of the light hole in the panel.
3. Place the tempered glass centered between the two guide angle pieces pressing it into the bead of caulk forming a seal.
4. Install the two end guide angle flanges (KP02L01-A & KP02-R01-A) per drawing. Insert bolts through wall panel hole and secure with nut.
5. Place light fixture between the end guide angle flanges. Use #12 drill screws to hold fixture per drawing.

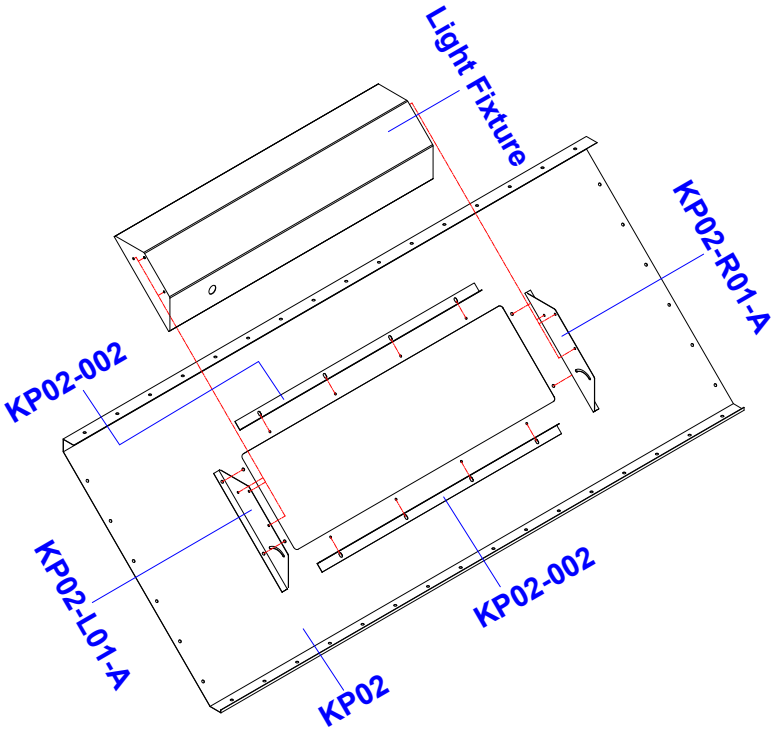

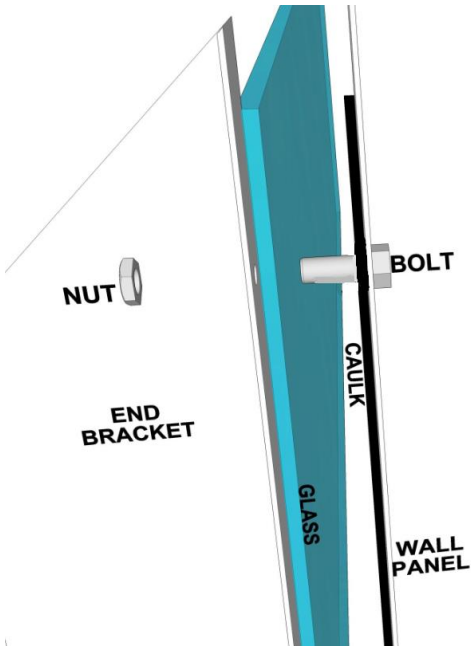

4.6 MANOMETER

Located manometer on booth where it can easily be read daily by the paint department. Install close to exhaust filter wall to keep tubing length to a minimum. Excess tubing length will reduce accuracy of the manometer. The high port will connect to work chamber, and the low port will connect to chamber on the suction side of the filter grid.

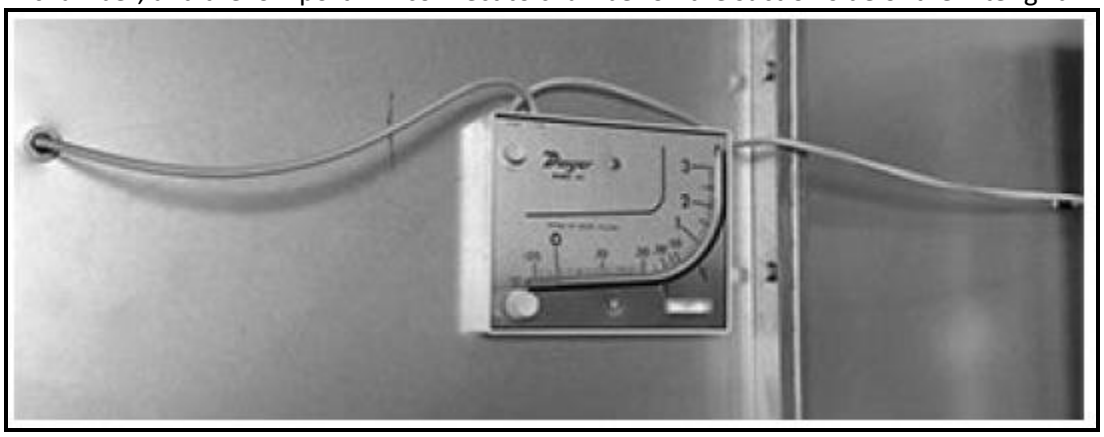

1. Drill a hole in booth wall just large enough for the plastic hose barb to fit through (approx. 13/32). Installwasher and nut on back side. Do not over tighten.

2. Mount manometer on booth wall and ensure it is level using bubble level on manometer. Manometer must be level, or it will not be accurate.

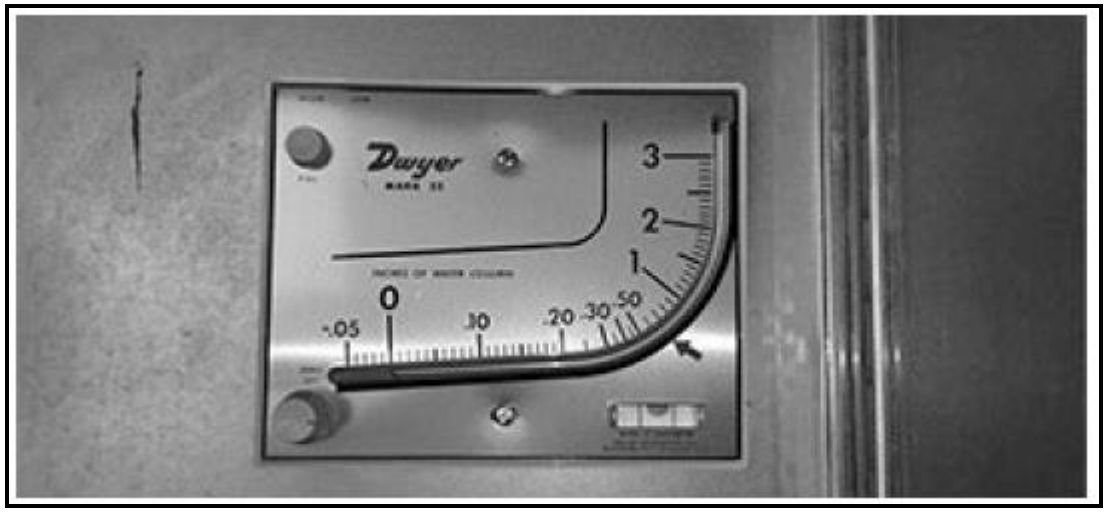

3. Turn “Zero Set” knob counter-clockwise until it stops, then turn knob clockwise 3 full turns. This will place the adjustment knob in the middle of its travel range. Remove fill plug at top of manometer and slowly fill with red fluid. You will not need the entire bottle. Stop filling as soon as you can see the red fluid enter clear tube at bottom of the manometer. Turn “Zero Set” adjustment knob to set red fluid on 0 mark. If you overfill gauge, remove excess fluid by inserting a pipe cleaner through fill port to soak up excess oil. Once the red fluid is set on zero, replace the fill cap.

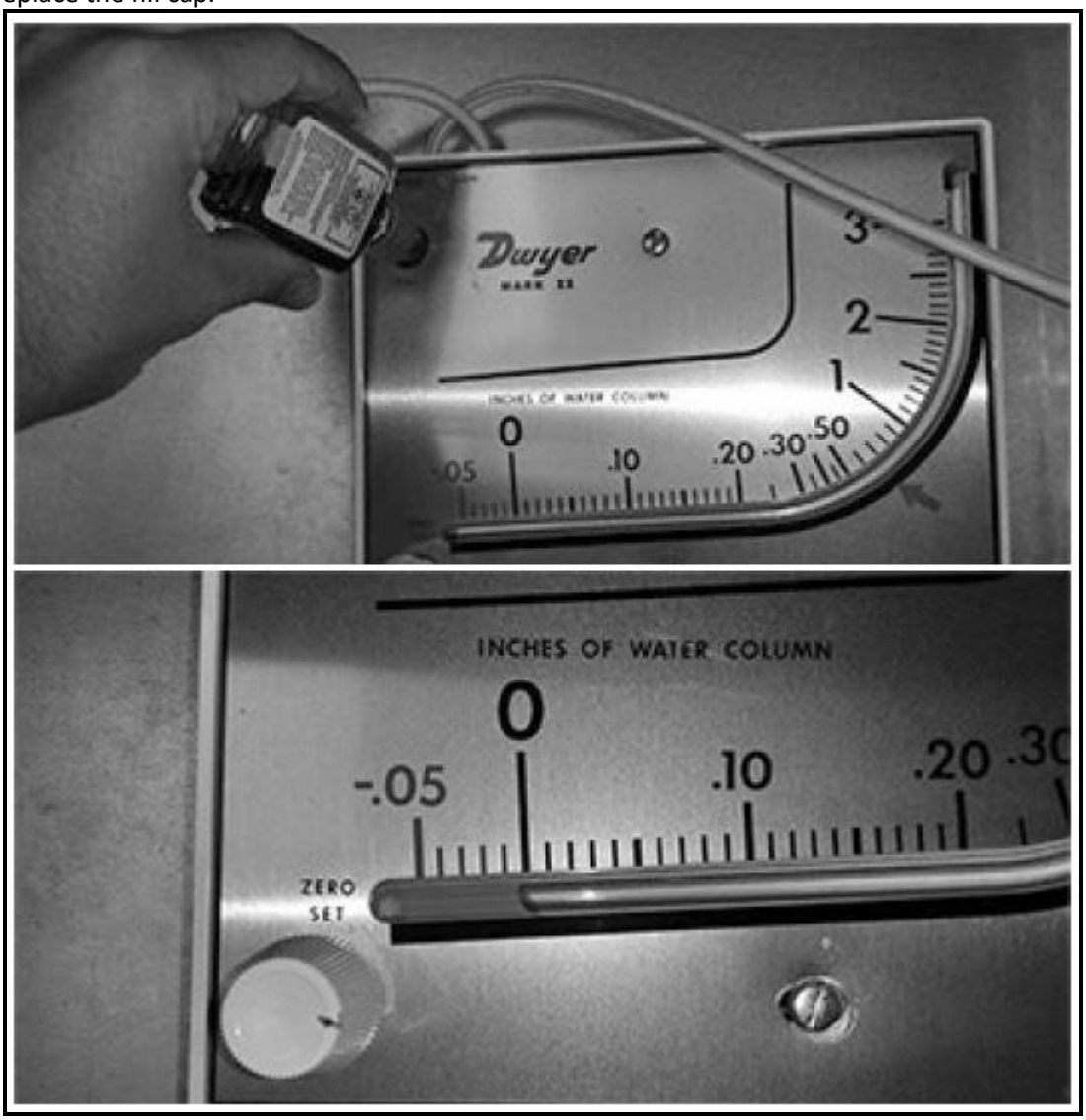

<u>Complete booth assembly and then perform steps 4-6 to set manometer</u>

<u>IMPORTANT:</u> All filters in the booth must be installed and new in order to get an accurate baseline.

4. Turn on exhaust fan. If exhaust fan is connected to a VFD to control the speed of the fan, make sure it is set to run at full speed. You will notice the red fluid should move up the scale and then settle at a number. The number will be different from booth to booth, but that does not matter, this is just a baseline setting.

5. Wherever the red fluid stops is where you will place the green arrow. In this example, the red fluid stopped at .25 inches of water column. So, because we know our filters are rated for .5 inches of water column, and we know that with clean filters the fan is drawing .25 inches of water column, we simply add the two numbers together to tell us where the filters will pack out.

Note: 25 inches of water + .5 inches of water = .75 inches of water total

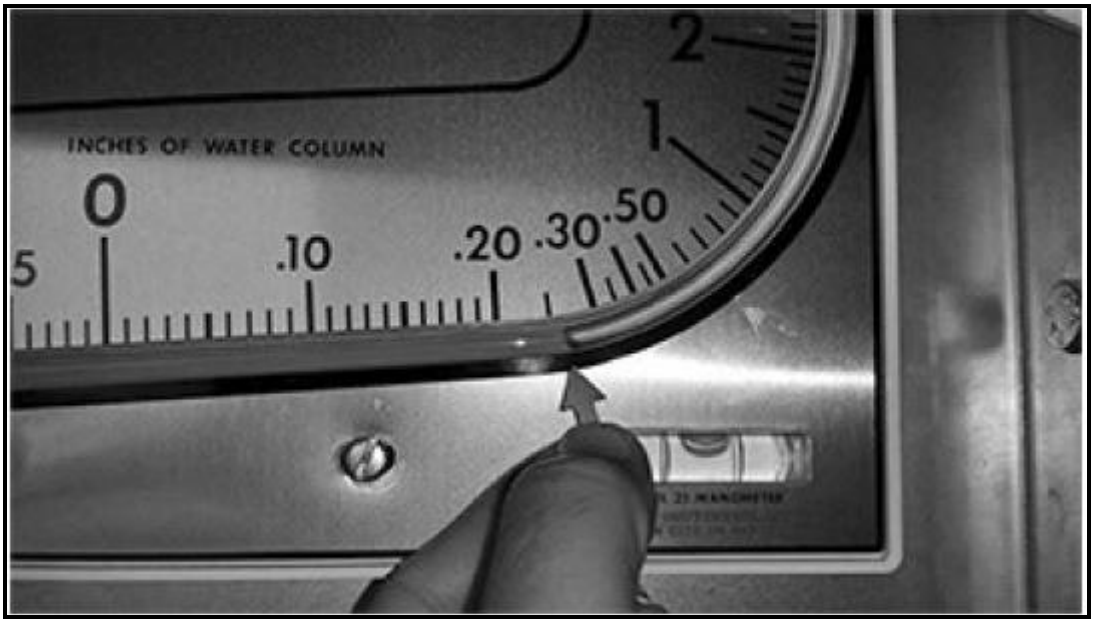

6. Now that baseline is set, measure up the scale .5 inches of water. That is where you will place the red arrow.

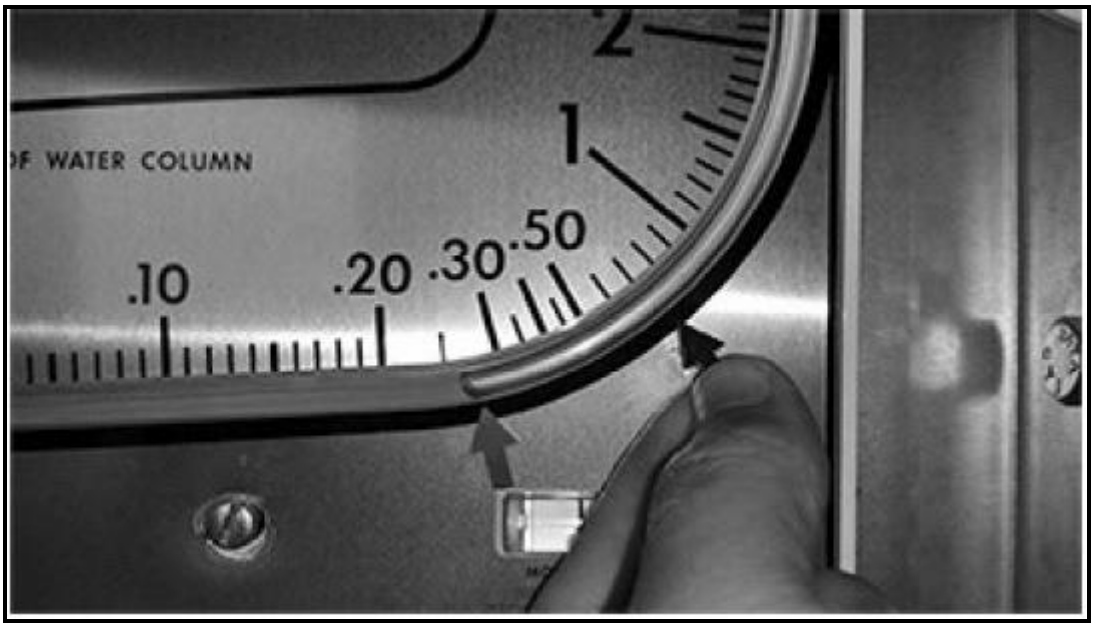

At this point, your manometer is set up and ready to use. You should never need to move the arrows once they are placed. Always check the manometer before turning the fan on to ensure the red fluid is sitting on the 0 mark. If the fluid is not on 0, turn “Zero Set” knob to adjust fluid to zero before starting fan.

4.7 EXHAUST FILTER INSTALLATION

Cut roll filter media to fit in each filter cell. Press filter media into filter cell (screws used to assemble filter cell will hold filter media in place).

4.8 INTAKE FILTER INSTALLATION

Insert intake filter into filter grid by turning it on edge. Pull intake filter down into place. The side with the cloth covering goes down toward booth.

4.9 MOTOR INSTALLATION

Couplings, drive belts, chains or other mounted devices must be in proper alignment, balanced and secure forsafe motor operation.

4.9.1 Mounting

This motor must be securely mounted. Sufficient ventilation must be provided to insure proper operation.

4.9.2 Install Sheaves And Fan Belts

1. The fan sheave (A) and motor sheave (B) must be inaxial alignment. Shafts must be parallel in both vertical and horizontal planes.
2. The sheaves must be in radial alignment. When sheaves are of equal width, align with a straightedge (C). When sheaves are of unequal width, align center of sheaves.
3. Check fan belts for proper tension and for signs of wear. Belt should have a slight sag at bottom of sheaves. NOTE: Belt (D) is properly adjusted. Belt (E) is too loose. Belt (F) is too tight.

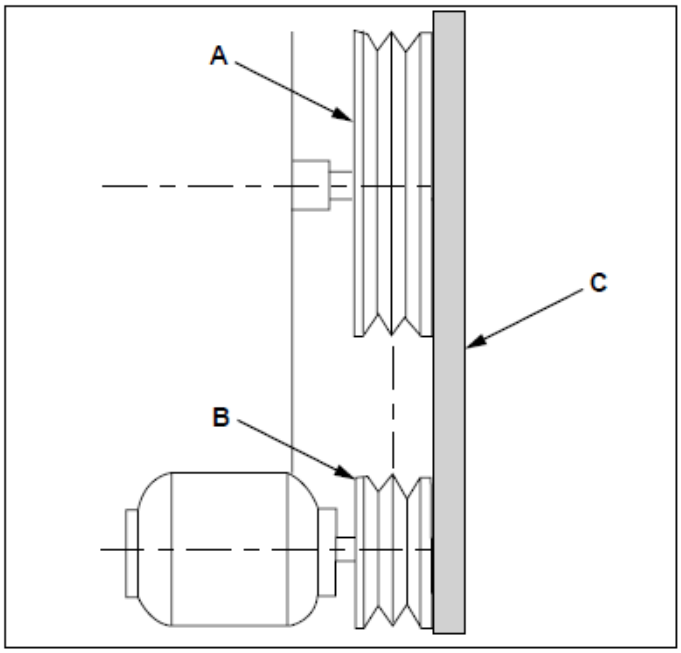

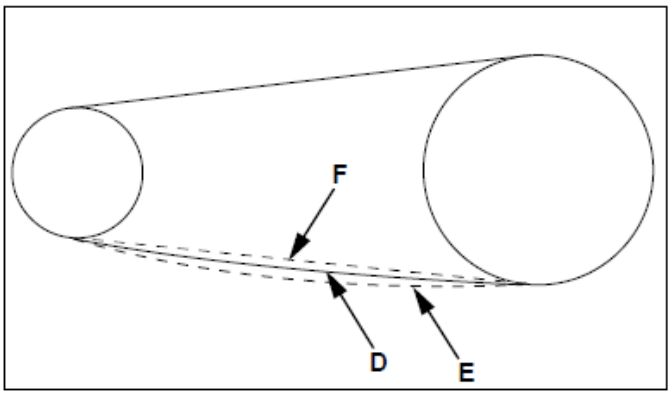

4.9.3 Electrical

⚠ WARNING

Prevent serious injury or death.

Electrical installations must be performed by qualified electricians.

Installation must conform to all national, local, and provincial codes and standards.

Complete booth assembly and then perform steps 1-4 below to connect electrical service to motor (NOTE: iDEAL does not recommend using 120V single phase on motors above 1HP)

1. Determine voltage at your facility.
2. If a control panel was sent with this booth, confirm that the voltage and phase on thecontrol panel matches the voltage and phase you intend to use.
3. Ensure the wiring diagram belowmatches your voltage, phase, and HP.
4. Locate the rotation arrow on the fan and verify belts are rotating in the direction of the arrow. If the belts are not rotating in the direction of the arrow, reverse the motor.

Motor Wiring Diagram 208-230/460 Volt, 3-Phase, 2 HP

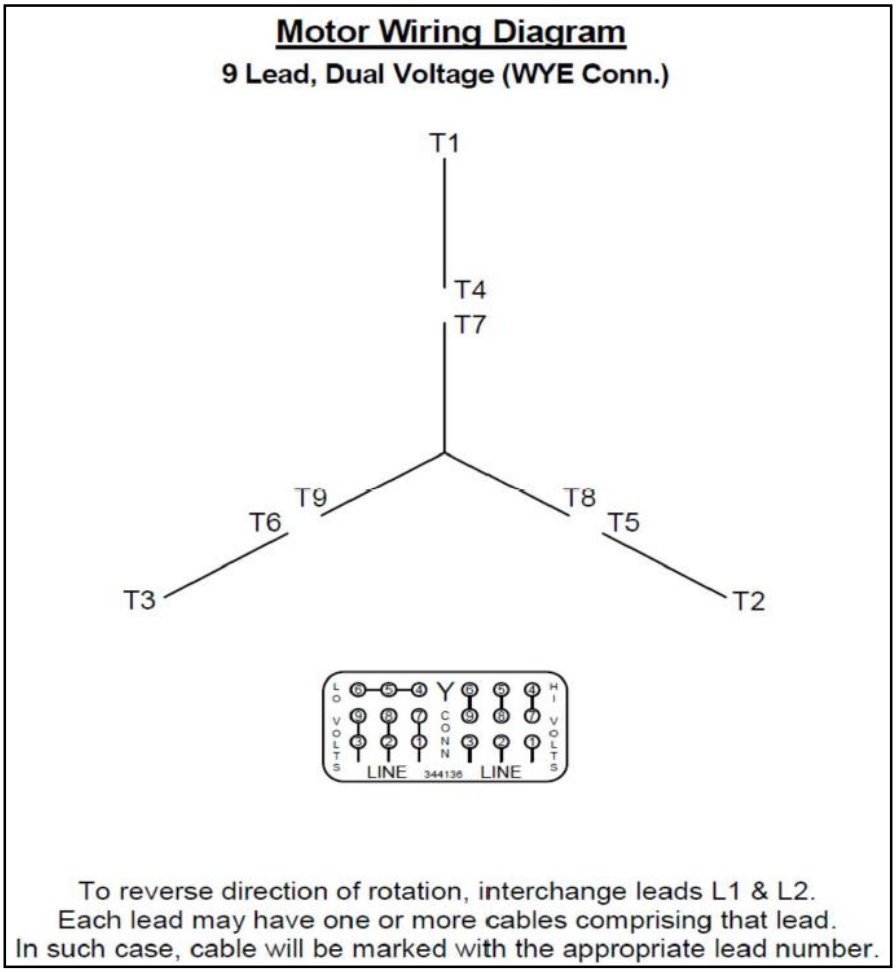

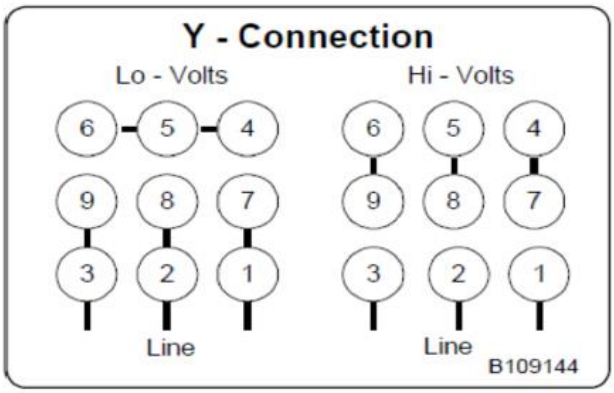

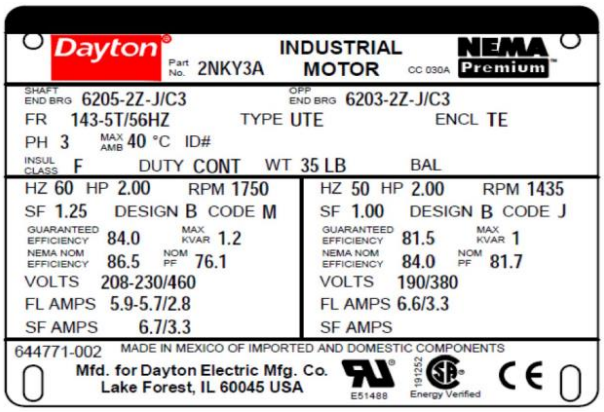

4.10 TUBEAXIAL FAN

⚠ WARNING

Fan assembly is heavy.

Fan assembly weight is approximately 50 - 200 lbs., depending on model. Use and adequate lifting device to install fan assembly.

⚠ WARNING

Prevent serious injury or death.

Electrical installations must be performed by qualified electricians.

Installation must conform to all national, local, and provincial codes and standards.

The fan and motor assembly can bolt to the top of Chimney Exhaust Stacks, or it can be placed in the exhaust duct above the roof (optional mounting flange rings required)

4.11 OPTIONAL - EXHAUST DUCT KIT &INSTALLATION

If equipped with optional exhaust ductwork, it is recommended to save this professionally installed.
(Storm Collar & Roof Flange sold separately)

To assemble the ductwork:

1. Bolt pipe with connecting ring to the exhaust fan.
2. Remaining ductwork is crimped on one end to interlock with the nextsection.
3. Your ARV (automatic damper) will be mounted on top.
4. Storm collar will attach to duct above flashing to make it weatherproof.

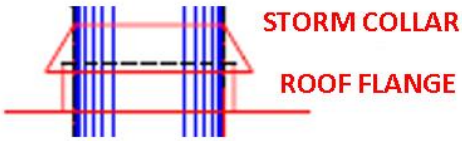

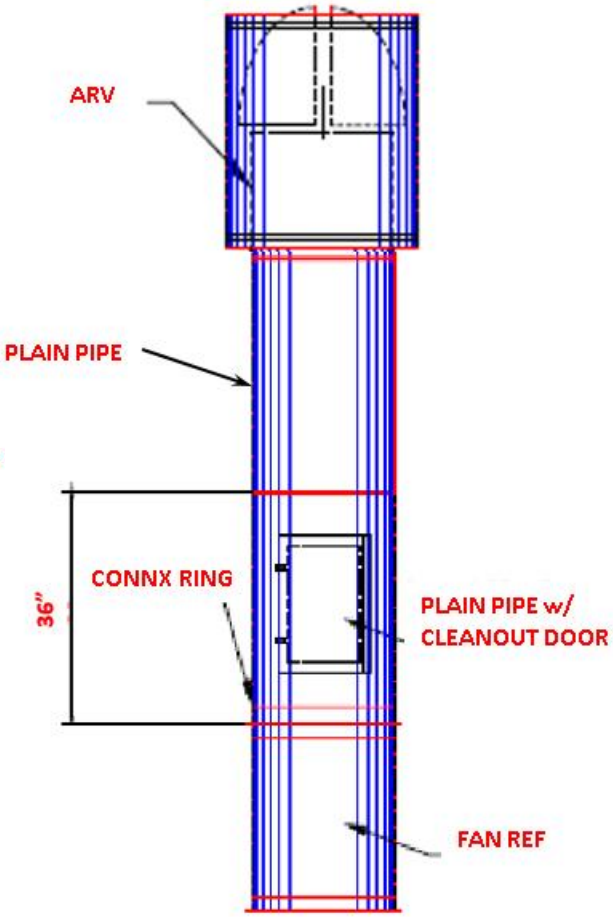

Special Note:
Where more than 25 ft. of piping is required, static pressure (resistance) isincreased and the air flow may be hindered when using the standard exhaustunit recommended for use with the booth.Where a piping arrangement of an unusual nature is necessary or where twoor more elbows are used, a similar condition may exist. Therefore, if either ofthese situations arises, contact the iDEAL for recommendations. Exhaust piping, including the canopy (if used), should extend a minimum of6' ft. above the highest point of building. There should be an access door justabove exhaust unit and another just below each elbow.

4.12 PRODUCT DOORS

Before installing door, verify both door frame channels and top door frame stop are installed properly and squared. Verify dimension between frame channels and floor to door stop with door drawing.

Install Left or Right Single Door

1. Place door in door frame on right or left side. Place spacers between door and floor. Door is manufactured to have a 1-1/2" clearance at bottom, 1/2" clearance on top and 1/2" clearance on sides.
2. Bolt hinges in place on door using pre-tapped holes (place on left edge of door for left mounting and on right edge of door for right mounting). Do not tighten screws at this time.
3. Adjust the door in all directions using spacers. Drill holes in hinge flanges using the hinges already on the door as templates. Place bolts and nuts through hinges and holes in mounting flange and tighten.
4. Remove spacers and check door for proper function. Adjust as needed.

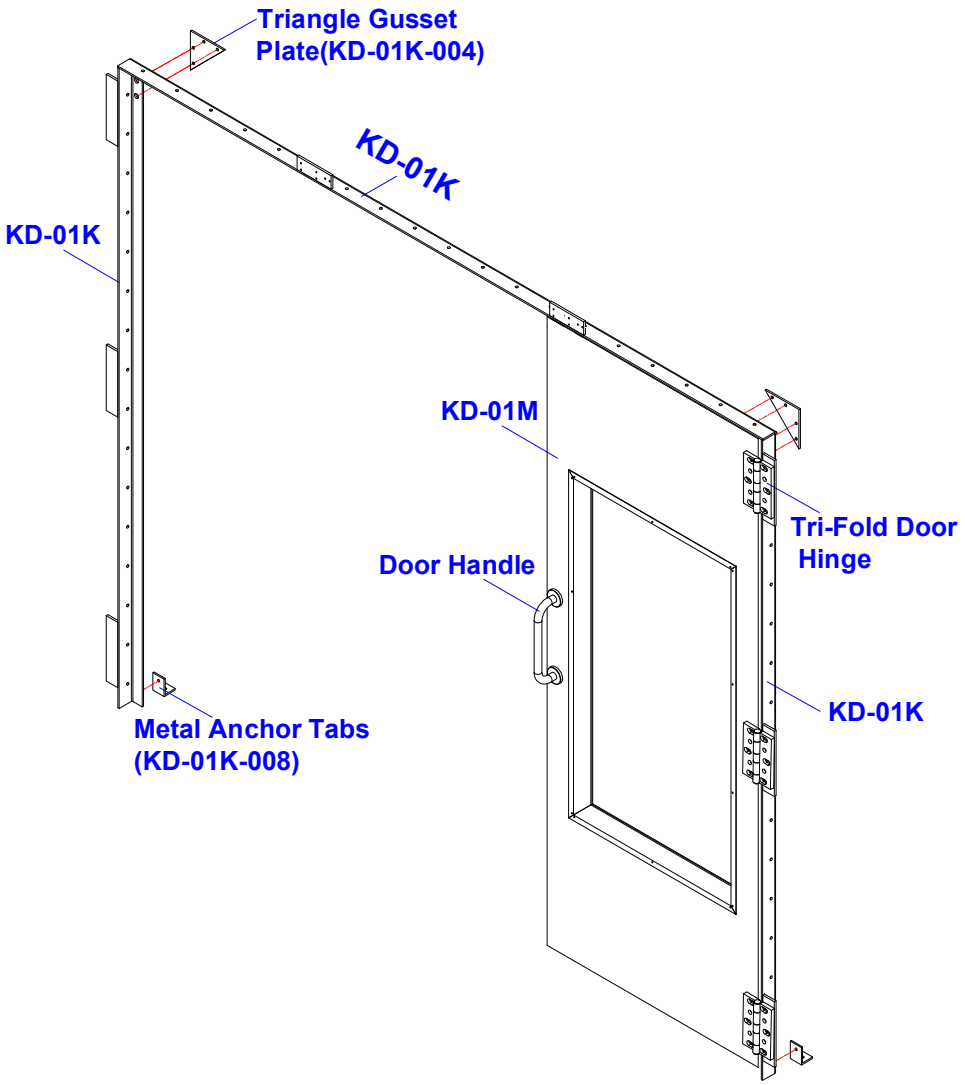

Install Left or Bi-Fold Door

1. Join the two doors by bolting hinges on opposing edges of doors when they are laid flat on the floor using bolts in the pre-tapped holes.
2. Place doors in door frame on right or left side. Place spacers between doors and floor. Door is manufactured to have a 1-1/2" clearance at bottom, 1/2" clearance on top and 1/2" clearance on sides.
3. Bolt hinges in place on door using pre-tapped holes (place on left edge of door for left mounting and on right edge of door for right mounting). Do not tighten screws at this time.

4. Adjust the doors in all directions using spacers. Drill holes in hinge flanges using the hinges already on the door as templates. Place bolts and nuts through hinges and holes in mounting flange and tighten.
5. Remove spacers and check door for proper function. Adjust as needed.

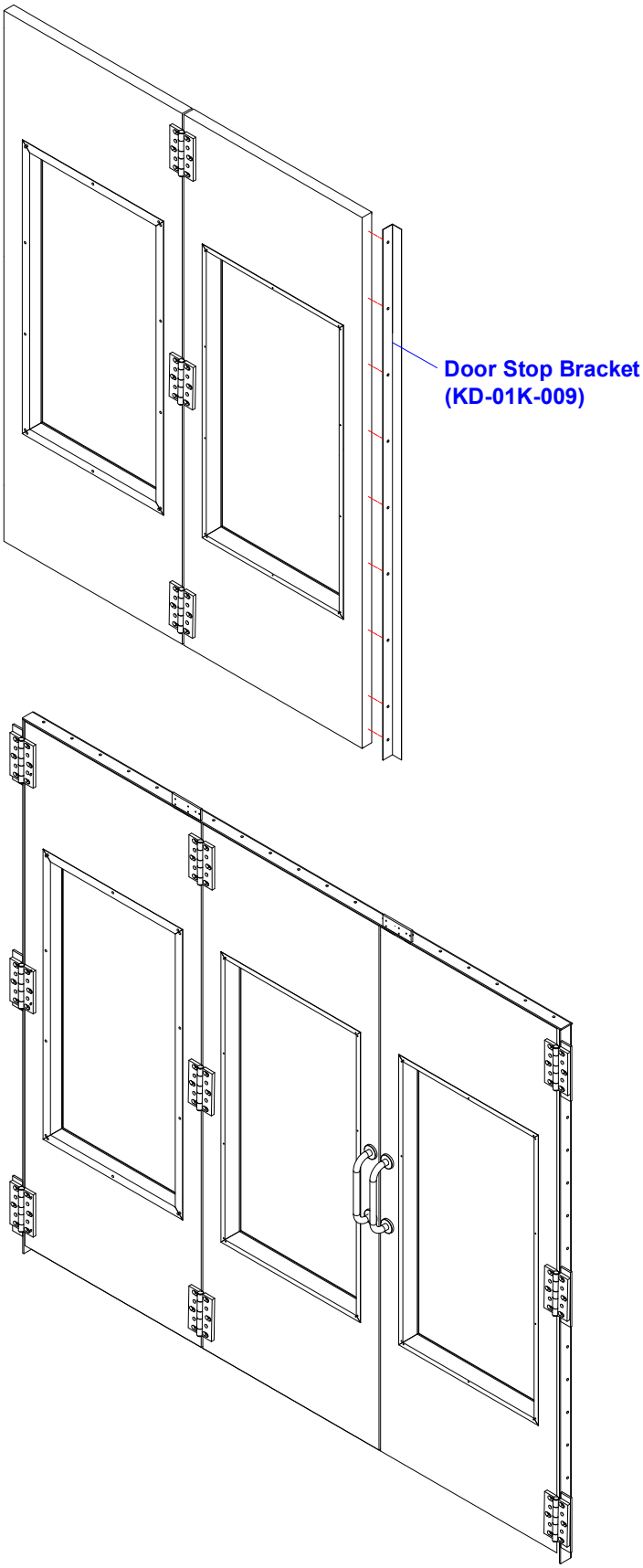

Install Door Sweeps

1. Cut a piece of rubber sweep material long enough to fit the bottom width of the product door.
2. Place cut piece of rubber on the floor centered under the bottom of the door.
3. Lift the outside edges of the cut rubber up on each side of door so it forms a loop that touches the floor.
4. Mark the position of the top edge of the cut rubber on each side of the door.
5. Hold one edge of the cut rubber on the mark on one side of the door and place a hold down strip on it. Screw the strip and rubber to the door.
6. Repeat step 5 on opposite side of door.
7. Repeat above on the remaining doors.

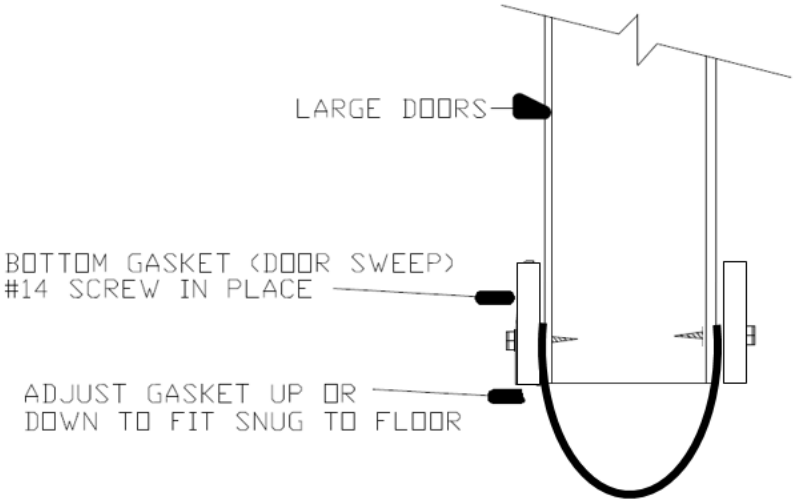

4.13 ACCESS DOOR LIMIT SWITCH INSTALLATION

1. Screw limit switch to limit switch mounting plate (may be mounted on right or left plate) so actuating arm aligns with door edge.
2. Adjust actuating arm so trigger plate will actuate switch.
3. Attach trigger plate to door edge so it actuates switch.
4. Make final adjustments to lever arm to assure proper operation and tighten set screw on limit switch lever.

4.14 ACCESS DOOR LATCH INSTALLATION

1. Attach striker to top edge of door so it will actuate roller in latch.
2. Attach latch to plate so it is actuated by striker.

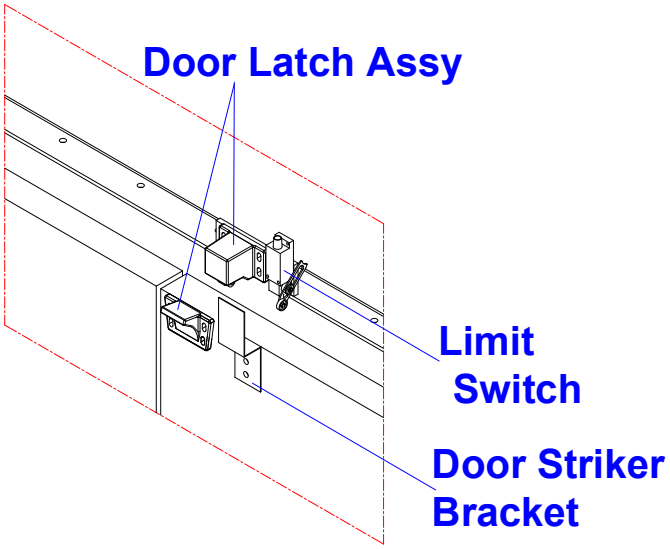

4.15 PRODUCT DOOR LIMIT SWITCH & LATCH INSTALLATION

1. Attach limit switch to limit switch mounting plate (may be mounted on right or left plate) so actuating arm aligns with door edge.
2. Adjust actuating arm so trigger plate will actuate switch.
3. Attach trigger plate to door edge so it actuates switch.
4. Make final adjustments to lever arm to assure proper operation and tighten set screw on limit switch lever arm.
5. Attach striker to top edge of door so it will actuate roller in latch.
6. Attach latch to plate so it is actuated by striker.
7. Repeat 5 and 6 on center door plate

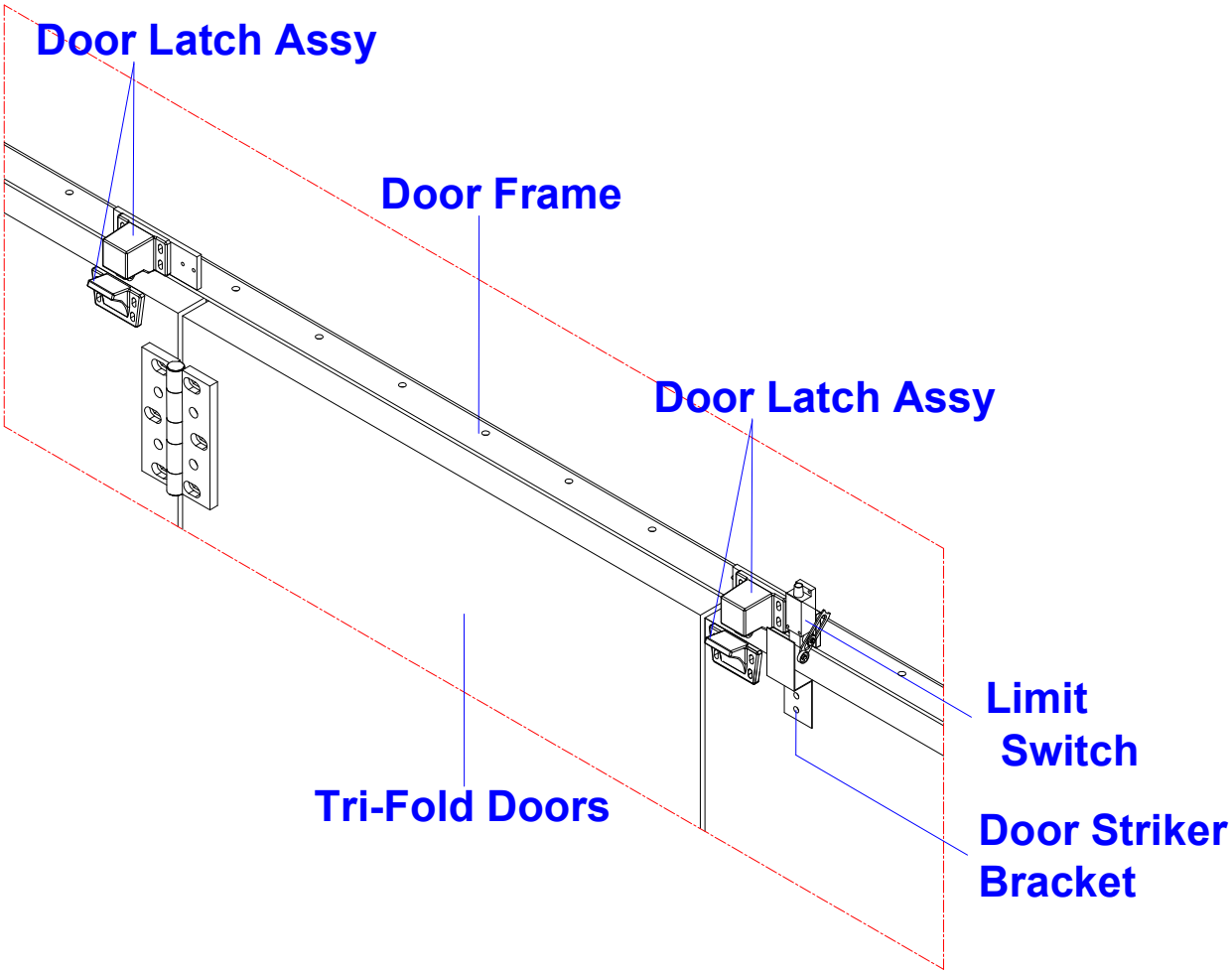

4.16 LIMIT SWITCH WIRING

1. Obtain line power from proper terminal in remote Control Panel and wire it to the first Limit Switch (Local Codes may require Limit Switches to be wired using rigid sealed off conduit).
2. Run line power from the first Switch to the second Switch.
3. Continue wiring all Switches in this manner to be in series.
4. Return the last line wire to the remote Control Panel and connect it to the proper terminal.
5. Controller in remote Control panel will now control the Air Solenoid in spray mode and Heat system in Bake mode (manual override must be reset if tripped) when door (s) are open.

4.17 AIR SOLENOID WIRING

(<u>Example only</u> - Consult wiring diagrams supplied with your equipment for proper installation)

1. Obtain power and common from proper terminals in remote Control Panel and wire them to the Air Solenoid.
2. Air solenoid is now controlled by Control Panel in spray mode.

CONTROL PANEL WIRING DIAGRAM – 208-240VAC, 60HZ, 3 PHASE

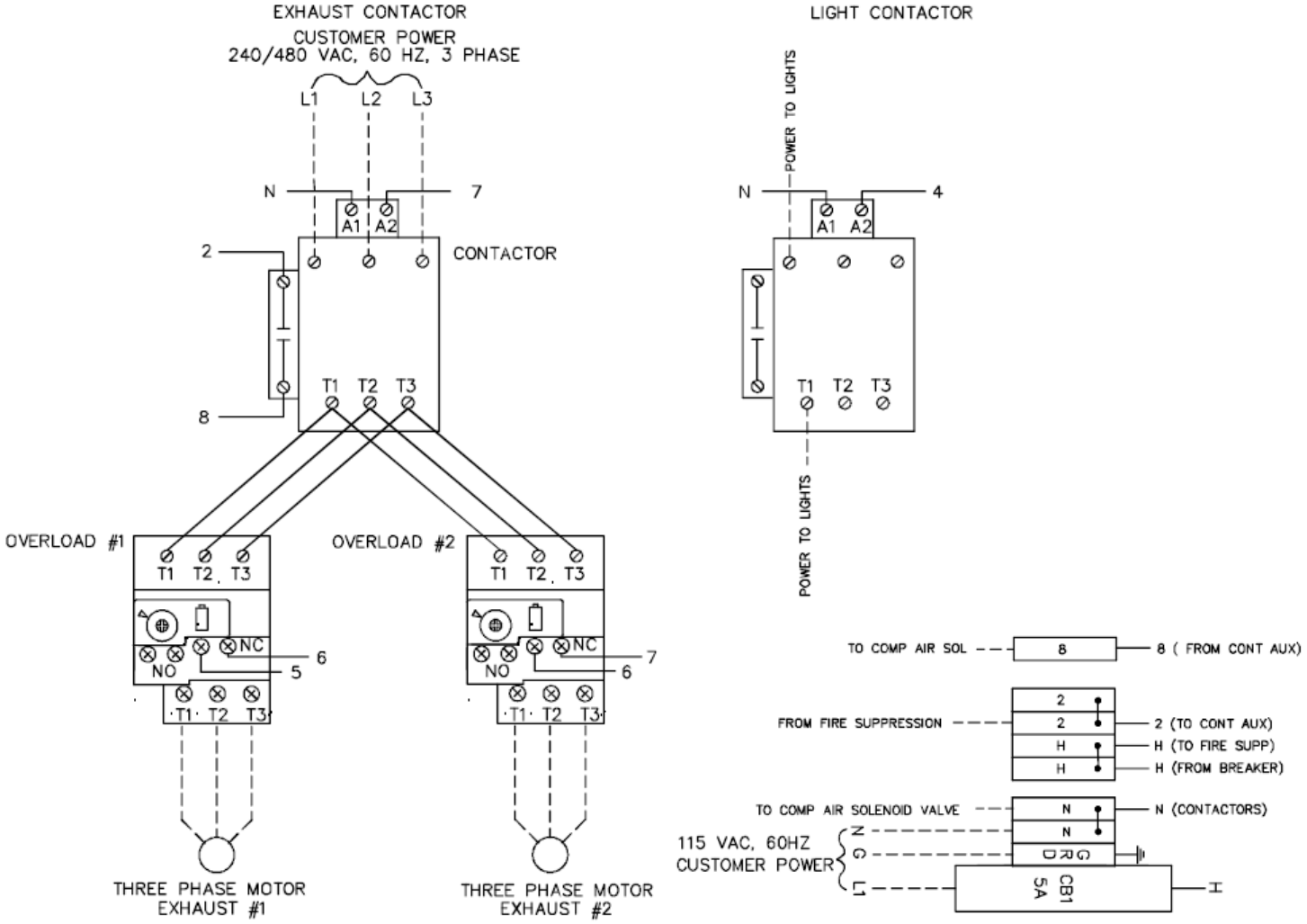

CONTROL PANEL WIRING DIAGRAM – (CONTINUED)

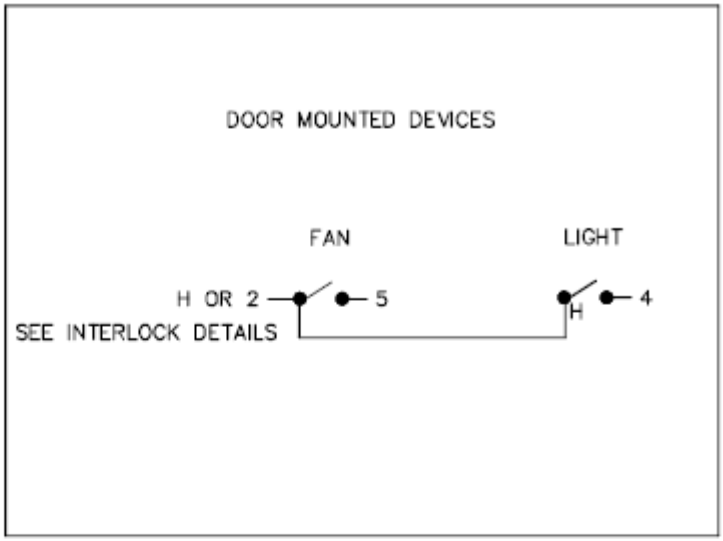

CONSULT FIRE SUPPRESSION EQUIPMENT SUPPLIER BEFORE CONNECTING INTERLOCKS!

DETERMINE IF VENTILATION NEEDS TO BE ON OR OFF IN CASE OF A FIRE ALARM.

CHOOSE APPROPRIATE INTERLOCK CONFIGURATION.

INTERLOCKS

VENTILATION ON DURING FIRE ALARM

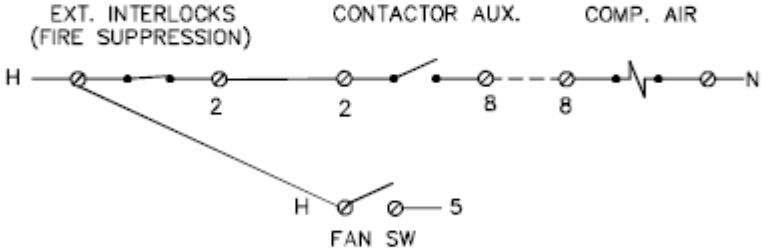

VENTILATION OFF DURING FIRE ALARM

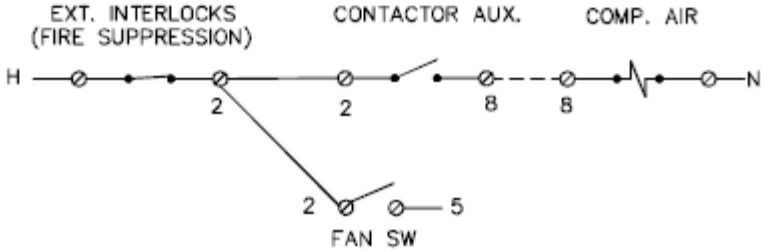

4.18 CHECKLIST

Check the following items prior to start up:

1. Motors wired for proper voltage.
2. All fans and motors turn freely.
3. Lubricate all bearings.
4. Check installation of exhaust fan for proper airflow direction. Generally, airflow is out of booth.
5. Listen for excessive or unusual noise when booth is operating.
6. With booth operating, open any door for 30 seconds and see if spray gun will shut down. This will verify proper safety operation of the booth.

5. MAINTENANCE

⚠ WARNING

Prevent serious injury or death.

Disconnect and lockout / tagout all power sources before adjusting, repairing, or cleaning booth.

⚠ WARNING

Prevent serious injury or death.

Service, maintenance and adjustments must be performed by trained and qualified personnel.

⚠ WARNING

Burn hazard. Do not touch hot parts.

Allow to cool before servicing.

⚠ WARNING

Prevent serious injury or death.

Always wear personal protective equipment (PPE) specific to the job.

Read Material Safety Data Sheet for products used in spray booth.

Review and follow all safety precautions before performing any maintenance.

5.1 MAINTENANCE INTERVAL CART

Item	Maintenance Interval			
	Daily	Every Two Months	Every Six Months	Every Year
Visually Inspect Filters	•			
Lubricate Door Latches		•		
Check And Adjust Belt Tension*			•	
Inspect And Clean Motor				•
Inspect And Clean Air Solenoid Safety Valve				•

*** Adjust belt tension after first week of operation, then every six months thereafter.**

5.2 DAILY

5.2.1 Inspect Filters

Visually inspect all filters for damage and debris buildup. Replace damaged or clogged filters.

5.2.2 Filter Maintenance

⚠ WARNING

Prevent serious injury or death.

Always wear personal protective equipment (PPE) specific to the job.

Wear personal protective equipment to protect against dry paint and dust particles while handling filters.
Check manometer gauge daily for condition of filters. Do not change filter based on its appearance.
Filters are not necessarily changed at equal time intervals. The usable life of a filter is related to:

- Filter material weave.
- Paint sprayed.
- Distance from gun to filter.
- Paint gun type.
- Amount of thinner used.
- Spray pressure.

5.2.3 Determine Filter Condition

1. The filter condition is acceptable when the manometer tube scale is between the two arrows.
2. When manometer scale exceeds red pointer flag, filters must be changed.
3. If a different filter media is to be used, manometer setup procedure must be done again.

5.3 EVERY TWO MONTHS

5.3.1 Lubricate Door Latches

Lubricate bearing pin and laminated cam with SAE 30-50 high temperature oil. Tighten set screws in handle as needed. For use in cold areas, use SAE 10-20 high temperature oil.
Test explosion-venting feature to verify proper operation. Corrosion and/or build-up of foreign materials may affect proper operation of latches.

5.4 EVERY SIX MONTHS

5.4.1 Check Fan Belts

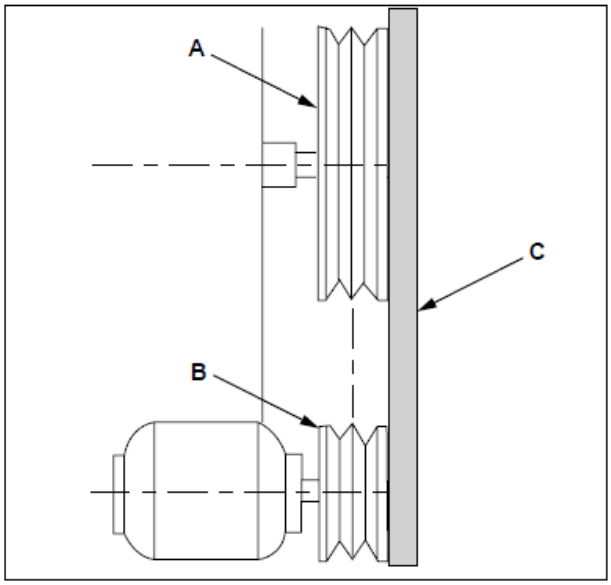

1. The fan sheave (A) and motor sheave (B) must be inaxial alignment. Shafts must be parallel in both vertical and horizontal planes.
2. The sheaves must be in radial alignment. When sheaves are of equal width, align with a straight edge (C). When sheaves are of unequal width, align centerof sheaves.
3. Check fan belts for proper tension and for signs of wear. Belt should have a slight sag at bottom ofsheaves. Belt (D) is properly adjusted. Belt (E) is too loose. Belt (F) is too tight.

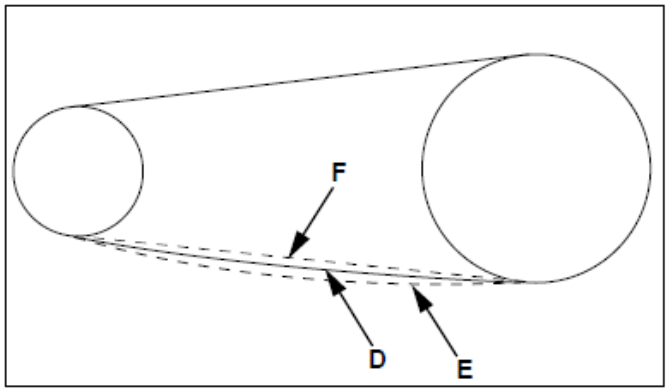

5.5 EVERY YEAR

5.5.1 Inspect Motor

Verify that cooling air to motor has not been diverted or blocked by dirty guards or other obstacles.

5.5.2 Inspect Fan Wheel

Inspect fan wheel for buildup of material, which may cause an unbalanced fan wheel. An unbalance fan wheelmay lead to premature failure of the fan wheel, bearings, and belt. Clean material buildup as necessary.

5.5.3 Inspect And Clean Air Solenoid Valve

The function of this valve is to interrupt the supply of compressed air to the painting equipment when the booth is not operating as designed or if any booth doors are open.

⚠ WARNING

Prevent serious injury.

Turn off electrical power, depressurize valve, and vent fluid to a safe area before servicing valve.

The time between cleanings varies depending on the medium and service conditions. If voltage to coil is correct, sluggish valve operation, excessive noise or leakage indicates that cleaning is required. Close strainer or filter when cleaning valve. Thoroughly clean all parts. If parts are worn or damaged, install a complete rebuild kit. Follow instructions included with rebuild kit.

6. WARRANTY

iDEAL Spray Booths have a full one year Warranty on all parts and materials. This warranty does not extend to include labor costs for the replacement of parts or materials covered under warranty. If a part is believed defective, please notify our Customer Service Department. A replacement item shall be shipped, and regular freight shall be paid by Tuxedo Distributors, LLC. If Tuxedo Distributors requires the defective part to be returned, appropriate return freight costs shall be paid by Tuxedo Distributors. IMPORTANT: Before returning the defective part(s), you must first get an RGA (Return of Goods Authorization) from our Customer Service Department. A copy of the RGA document MUST be included with the returned item(s). The Seller warrants to Buyer that the equipment mentioned herein shall be free from defects of materials or workmanship under normal use and maintenance for a period of one (1) year from date of shipment. The liability of Seller under this warranty shall be limited to the repair or replacement, at Seller's option, of any part orcomponent which may prove to be defective under normal use, service, and maintenance after Seller, in its sole discretion, determines same to be defective. Said warranty is conditioned upon Buyer giving Seller immediate written notice of an alleged defect and refraining from the attempted repair of alleged defects without prior written consent of Seller. The Seller makes no warranty whatsoever with respect to accessories or components not supplied by Seller. For any components purchased by Seller for use on or in conjunction with the equipment, which is the subject of this contract, the Seller extends to the Buyer only the same warranty granted to Seller by the component vendor or manufacturer.

THIS LIMITED WARRANTY IS EXCLUSIVE AND IS IN LIEU OF ANY OTHER WARRANTIES (EXPRESSED OR IMPLIED) INCLUDING WARRANTY OF MERCHANTABILITY OR WARRANTY OF FITNESS FOR PARTICULAR PURPOSE AND OF ANY NON-CONTRACTUAL LIABILITIES INCLUDING PRODUCT LIABILITIES BASED ON NEGLIGENCE OR STRICT LIABILITY. EVERY FORM OF LIABILITY FOR DIRECT, SPECIAL, OR CONSEQUENTIAL DAMAGES OR LOSS IS EXPRESSLY EXCLUDED AND DENIED. IN NO CASE SHALL iDEAL SPRAY BOOTHS LIABILITY ON THIS WARRANTY EXCEED THE AMOUNT OF THE PURCHASE PRICE.

The performance and safety of the equipment mentioned herein is contingent upon proper installation, the use of suitable process materials and operation and maintenance by properly trained personnel. During the warranty period, Tuxedo Distributors will have the option to repair or replace, free of charge, any parts that Tuxedo Distributors has verified to be defective in materials or workmanship. If inspection of the equipment does not disclose any defect in workmanship of material, repaired or replacement parts will be offered at a reasonable price, which will include the costs of labor, materials, and transportation.

6.1 Returning Items For Credit

Tuxedo Distributors will take back any standard stocked items returned and issue a credit, less a 15% handling and restocking fee. Customer is responsible for all Freight Charges and the item MUST be returned in its original condition. If the item is damaged in transit, you will not receive credit. Tuxedo Distributors will mark the Bill of Lading"Damaged" and send you pictures of the damaged item. For custom or non-stock special order items you mustcontact our Customer Service Department to determine if the item may be returned. Any restocking charges shall be determined on a case by case basis. If an item needs to be returned, Tuxedo Distributors will issue you an RGA (Return Goods Authorization) form. Please ensure that a copy is sent back with returned item(s). Without an RGA the product may be lost or returned to stock withno credit issued. Please note that in some cases the freight may be more than the item is worth when credit is received.

6.2 Back Charges For Material And Labor

Tuxedo Distributors shall not be held responsible for any back-charges incurred for materials or labor without prior written consent. Should a problem arise, please notify Tuxedo Distributors immediately. Once the issue is investigated, should costs be incurred, an amount shall be agreed upon by both parties before-hand. Do NOT attempt modifications or repairs without prior consent as this may void further warranty repairs or credit. Tuxedo Distributors will not accept back-charges associated with any type of late delivery.

Please address warranty repairs to:

Tuxedo Distributors, LLC / iDEAL Paint Spray Booths
8320 E. Hwy 67
Alvarado, TX 76009
Attention: Customer Service
Toll Free: 817-558-9337 / Fax: 817-558-9740